Table of Contents

Kentucky Department of Education
Pupil Transportation
2012 Four Hour Technicians Update Information

You may use these links to open each of the files:

1. AGENDA
2. Sign-in Sheet
3. Failed Lights
4. Vehicles designed to transport fewer than ten
5. Small Vehicle Inspection (Small Vehicle Inspt)
6. Upgrading to current Specification
7. Kennedy Letter (Carpenter)
8. Brown Letter 1 (Carpenter)
9. Brown Letter 2 (Carpenter)
10. Anti Freeze
11. 2013 Specification Changes
12. Recalls

a. Thomas Built

1. Recall #11V-204/205. Federal Data Label, Tire &Loading Placard. Type A buses only.
2. Recall #11V-222/223 EM1 Gen V Evaporator Units-Carrier. AC equipped buses only.
3. Recall #11V-503/TC2011-369. Battery Cable Pass- Thru Corrosion. 2004-05, C-2 buses.
4. Recall #11V-517, SpectAL Push out Window Handle. FC and Type A.
5. Diamler Trucks Recall #11V-578. FCCC Bus Chassis Side Marker/Directional Lights. C-2 buses.
6. Diamler Trucks Recall # 11V573. FCCC Bus Chassis Grid Heater Relay Wiring. 2010-11. C-2.
7. Service Bulletin 54-9. Unintended Wiper Cycling. C-2 built before 7/18/11.
8. Field Service Campaign. SF443AB Bus Chassis Poly-V Serpentine Drive Belts. C-2, 6/10/09-1/7/11.
9. Field Service Campaign. SF451AB. Remy 29MT Starters. C-2. 2/1/11-3/23/11.
10. Field Service Campaign. SF453A-D. Hybrid Cooling System Updates and Check Lamps. Hybrids. 12/5/07-7/21/11.

b. Blue Bird

1. Recall R08NC. FMVSS 221 School Bus body Joint Strength Noncompliance-Incorrect Rivet Pattern. 2004-2009. Type C and D

2. Recall # R09PD. Incorrect bolt and/or spacer in engine cooling fan. 1/18/07-10/29/08 type C with Caterpillar engine.
3. Recall # R09PF. Insufficient Torque on steering gear mounting fasteners. Type D, 7/22/08-11/22/08.
4. Recall # R09PH. Power steering reservoir gasket failure. Type C. 3/27/07-6/10/09.
5. Recall # R10SL. Starter cable and engine wiring harness may contact engine fan hub. Type D FC. 5/26/06-8/07/10.
6. Recall # R11SZ. Brake ABS malfunction indicator light noncompliance. Type C. 10/23/06-12/9/09
7. Recall # R09PM. Offset leg Barrier pad and 2/3 passenger seat back pad noncompliance. Type A, 8/28/07-4/7/09. Type C 1/30/03-4/7/09. Type D 1/30/03-4/7/09. Special needs (30 inch seats) 2/1/03-4/24/07.
8. Service Bulletin # S08NL. Auxiliary fan inspection. All 2009 model year buses.
9. Service Bulletin # S08NR Fan clutch spacer bolts. 2008-09 type C with caterpillar engines.
10. Service Bulletin # S10RD. Radiator internal transmission oil cooler failures. 2008-2010 model buses with 3000PTS transmission.
11. Service Bulletin # S10RY. Intermotive Guardian II lift interlock wiring. Type A HDC only 2007-2011 model Micro Bird.
12. Service Bulletin # S10SA. Low coolant sensor leaks. Type C and D buses. 2/15/07-3/1/10.
13. Service Update S1003. Approved coolants, All products. (part of #10)

c. IC Corp.

1. Recall # G11518. Alternator wiring, Max Force 7, Type C, 6/27/06-3/23/11.
2. Recall # G-11506. Return fuel valve, Max Force 7, Type C, 5/27/10-3/8/11.
3. Recall # G11511. Battery Cables, Type D RE. 2/4/10-6/16/11.
4. Authorized Field Change. AFC 11916. Turbo air inlet boot replacement. Type C and D RE. 3/29/11-6/29/11.
5. Authorized Field Change. AFC 11922. Engine recalibration Maxx Force DT. Recalibrate correct rough idle condition,9/22/06-4/6/11.
6. Authorized Field Change. AFC11925.Engine Recalibration to prevent drop in power during exhaust regeneration, 5/18/10-9/30/11.
7. Authorized Field Change. AFC11926. Intake pipe replacement. Max Force 7 engine. 1/1/10-11/7/11.

Table of Contents

Agenda

2012 Four Hour Update

1. **Administrative**
2. Number of LED's out for replacement.
3. Vehicles designed to carry fewer than ten inspection standards.
4. Upgrade standards.
5. DT 466 making oil. Oil change standards.
6. Carlin rails on remaining Carpenters
7. Sill cracking on IC buses due to loose clips.
8. SCA testing on new/old antifreeze.
9. ASTM standard for antifreeze
10. Changes to Kentucky Minimum Specifications.
11. Recalls

Thomas Built

1. Recall #11V-204/205. Federal Data Label, Tire &Loading Placard. Type A buses only.
2. Recall #11V-222/223 EM1 Gen V Evaporator Units-Carrier. AC equipped buses only.
3. Recall #11V-503/TC2011-369. Battery Cable Pass- Thru Corrosion. 2004-05, C-2 buses.
4. Recall #11V-517, SpectAL Push out Window Handle. FC and Type A.
5. Diamler Trucks Recall #11V-578. FCCC Bus Chassis Side Marker/Directional Lights. C-2 buses.
6. Diamler Trucks Recall # 11V573. FCCC Bus Chassis Grid Heater Relay Wiring. 2010-11. C-2.
7. Service Bulletin 54-9. Unintended Wiper Cycling. C-2 built before 7/18/11.
8. Field Service Campaign. SF443AB Bus Chassis Poly-V Serpentine Drive Belts. C-2, 6/10/09-1/7/11.
9. Field Service Campaign. SF451AB. Remy 29MT Starters. C-2. 2/1/11-3/23/11.
10. Field Service Campaign. SF453A-D. Hybrid Cooling System Updates and Check Lamps. Hybrids. 12/5/07-7/21/11.

Blue Bird

1. Recall R08NC. FMVSS 221 School Bus body Joint Strength Noncompliance- Incorrect Rivet Pattern. 2004-2009. Type C and D
2. Recall # R09PD. Incorrect bolt and/or spacer in engine cooling fan. 1/18/07-10/29/08 type C with Caterpillar engine.
3. Recall # R09PF. Insufficient Torque on steering gear mounting fasteners. Type D, 7/22/08-11/22/08.
4. Recall # R09PH. Power steering reservoir gasket failure. Type C. 3/27/07-6/10/09.
5. Recall # R10SL. Starter cable and engine wiring harness may contact engine fan hub. Type D FC. 5/26/06-8/07/10.
6. Recall # R11SZ. Brake ABS malfunction indicator light noncompliance. Type C. 10/23/06-12/9/09
7. Recall # R09PM. Offset leg Barrier pad and 2/3 passenger seat back pad noncompliance. Type A, 8/28/07-4/7/09. Type C 1/30/03-4/7/09. Type D 1/30/03-4/7/09. Special needs (30 inch seats) 2/1/03-4/24/07.
8. Service Bulletin # S08NL. Auxiliary fan inspection. All 2009 model year buses.
9. Service Bulletin # S08NR Fan clutch spacer bolts. 2008-09 type C with caterpillar engines.
10. Service Bulletin # S10RD. Radiator internal transmission oil cooler failures. 2008-2010 model buses with 3000PTS transmission.
11. Service Bulletin # S10RY. Intermotive Guardian II lift interlock wiring. Type A HDC only 2007-2011 model Micro Bird.
12. Service Bulletin # S10SA. Low coolant sensor leaks. Type C and D buses. 2/15/07-3/1/10.
13. Service Update S1003. Approved coolants, All products.

IC Corp.

1. Recall # G11518. Alternator wiring, Max Force 7, Type C, 6/27/06-3/23/11.
2. Recall # G-11506. Return fuel valve, Max Force 7, Type C, 5/27/10-3/8/11.
3. Recall # G11511. Battery Cables, Type D RE. 2/4/10-6/16/11.
4. Authorized Field Change. AFC 11916. Turbo air inlet boot replacement. Type C and D RE. 3/29/11-6/29/11.

5. Authorized Field Change. AFC 11922. Engine recalibration Maxx Force DT. Recalibrate correct rough idle condition,9/22/06-4/6/11.

6. Authorized Field Change. AFC11925.Engine Recalibration to prevent drop in power during exhaust regeneration, 5/18/10-9/30/11.

7. Authorized Field Change. AFC11926. Intake pipe replacement. Max Force 7 engine. 1/1/10-11/7/11.

Table of Contents

PUPIL TRANSPORTATION BRANCH
ANNUAL FOUR-HOUR UPDATE
2012

INSTRUCTOR NAME _____ DATE _____

LOCATION _____

NAME	TITLE	SCHOOL DISTRICT

Mangum, Dave - Division of District Support

From: Cliff Bolhouse <cbolhouse@soundoffsignal.com>
Sent: Tuesday, March 29, 2011 9:50 AM
To: Mark Cahill
Cc: Mangum, Dave - Division of District Support
Subject: RE: LED Lights

Mark,

10% is the percentage we use for determining failed lights. It seems like most states use somewhere in the 20%-25% range which seems to work well.

Thanks,

Cliff Bolhouse
National Account Manager
SoundOff Signal
toll free: 800-338-7337 ext 121
direct: 616-662-6121
cbolhouse@soundoffsignal.com
www.soundoffsignal.com

From: Mark Cahill [mailto:mark.cahill@fuse.net]
Sent: Monday, March 28, 2011 10:32 AM
To: Cliff Bolhouse
Cc: Dave Mangum
Subject: LED Lights
Importance: High

Cliff,

Can you let me know the standard for number of diodes inoperative in an LED light (I think this is usually expressed as a percentage) to make it a warranty issue so that we can use that as a warranty standard for school buses in the Commonwealth of Kentucky?

Thanks,

Mark Cahill
Bluegrass International Trucks and Buses, Inc.

NOTICE: This email transmission contains privileged and confidential information intended only for the use of the individual or entity named above. Any unauthorized review, use, disclosure or distribution is prohibited and may be a violation of law. If you are not the intended recipient or a person responsible for delivering this message to an intended recipient, please delete the email and immediately notify the sender via the email return address.

Vehicles designed to transport fewer than nine passengers or less.

1. KRS 156.153 Section 2. Except in cases of emergencies or for the transportation of students with disabilities, only school buses as defined in subsection (1) of this section shall be used for transporting students to and from school along regular bus routes. Districts may use district-owned vehicles that were and built by the manufacturer for passenger transportation when transporting nine or fewer passengers, including the driver for approved school activities. Vehicles used under this subsection shall be clearly marked as transporting students and shall be inspected no less than once every thirty days.

2. 702 KAR 5:010 section 3 All vehicles used for the transportation of pupils shall meet the minimum safety standards for Kentucky school buses of the same model year, except as provided in 702 KAR 5::060 Section 6(2) or 702 KAR 5:130, Sections 1 and 2.

3. 702 KAR 5:060 section 6(2) allows the use of certificated common carriers for School events on a case by case basis with board approval per trip. A classic example of this type of trip would be a charter to Washington DC for a senior trip.

4. 702 KAR 5:130, Sections 1 and 2 allow the use of vehicles designed to carry fewer than ten for emergency transportation of students, approved school activities and for qualified special needs students.

5. Sections 6 and 7 is where we come in. Section 6 says: Before a vehicle is initially used to transport pupils, a safety inspection shall be made on the vehicle by an approved school bus inspector to certify that the vehicle is in a safe operating condition. If the vehicle is found to be in an unsafe operating condition, it shall not be used to transport pupils until the necessary repairs are made. Section 7 says: A vehicle shall be inspected at least once each month that the vehicle is used to transport pupils, utilizing the same criteria for inspection as for school buses on the “Preventative Management Inspection” Form as found in the Pupil Transportation Management Manual, April 1998.

Table of Contents

Marion County Schools
300 Knights Way
Lebanon Ky 40033

KENTUCKY DEPARTMENT OF EDUCATION
PREVENTIVE MAINTENANCE INSPECTION REPORT "A"

DATE:____/_____/_____ VEHICLE NUMBER _____

ODOMETER:_____

INSPECTOR:_____

(V) ITEM IS O.K. **(O) ADJUSTMENTS MADE** **(X) REPAIRS NEEDED WRITE ON WORK ORDER**

ROAD TEST ON LOT

ITEM		ITEM		ITEM	
Engine Oil (Qts. Low)		Brake Performance		Parking Brake	
Ignition Switch		Pedals & Pads		Windshield Washer	
Engine Operation		Drive Test (On Lot)		Windshield Wipers	
Oil Pressure		Transmission Shift		Glass	
Instruments		Horn		Heaters & Defrosters	
Road Test		Steering Play		Shutdown Operation	

REAR AXLE

ITEM		ITEM		ITEM	
Differential		Shackles		Spring Leaves	
Pinion Seal		Breathers		Axle Housing	
Fluid Level (Pts)		Drums & Hubs		Bk. Lines & Connections	
Shock Abs. & Linkage				Brake Lining	
Brackets				Brake Adjustment	
				Seals	

DRIVE LINE **CHASSIS FRAME**

ITEM		ITEM		ITEM	
Yokes & Splines		Tail Pipe		Lines & Fittings	
Flange Bolts		Muffler		Mounting Bolts	
U-Joints		Exhaust Pipe		Fuel Tank	
		Hangers			

FRONT AXLE

ITEM		ITEM		ITEM	
Brake Lining		Tie Rod Ends		Shocks	
Bk. Lines & Connections		Axle		Shackles & Brackets	
Brake Adjustment		U-Bolts		Linkage	
		Backing Plate		Steering Gear, U-Joint	

Table of Contents

Marion County Schools
300 Knights Way
Lebanon Ky 40033

"A"

(V) ITEM O.K. (O) ADJUSTMENTS MAKE (X) REPAIRS NEEDED
WRITE UP ON WORK ORDER

TRANSMISSION

ITEM		ITEM		ITEM	
Leaks		Modulator		Linkage	
Fluid level (Qts)		Breather		Cable	
Shift Linkage		Mountings		Park Brake	

PARKING BRAKE

ENGINE

ITEM		ITEM		ITEM	
Water Leak		Battery Volts		Water Pump	
Radiator		Alternator		P\S Pump	
Fan Belt		Battery		Antifreeze	
Fuel Leak		Oil Pressure		Oil Leaks	
Exhaust Flanges					

CAB AND BODY

ITEM		ITEM		ITEM	
Handles & Mirrors		Seat Upholstery		License Plate	
Seat Belts		Emergency, Safety Equip.		Fuel Cap	
Doors & Stops		Fenders		Hood & Latches	
Door Handles & Hinges		Body Panels		Sun Visor	
Seals, Weather Strips		Bumpers		Lights and Reflectors	
Underdash Wiring					
Radio					

WHEELS AND TIRES

ITEM		ITEM		ITEM	
Alignment		Left Front Replacement		Left Front Air Pressure	
Wheels & Rims		Right Front Replacement		Right Front Air Pressure	
Lugs & Studs		Left Rear . Replacement		Left Rear . Air Pressure	
Tire Balance		Right Rear . Replacement		Right Rear . Air Pressure	

Table of Contents

Marion County Schools
300 Knights Way
Lebanon Ky 40033

KENTUCKY DEPARTMENT OF EDUCATION
PREVENTIVE MAINTENANCE INSPECTION REPORT "B"

DATE:____/_____/_____ VEHICLE NUMBER _____

ODOMETER:_____

INSPECTOR:_____

(V) ITEM IS O.K. **(O) ADJUSTMENTS MADE** **(X) REPAIRS NEEDED WRITE ON WORK ORDER**

ROAD TEST ON LOT

ITEM		ITEM		ITEM	
Engine Oil (Qts. Low)		Brake Performance		Parking Brake	
Ignition Switch		Pedals & Pads		Windshield Washer	
Engine Operation		Drive Test (On Lot)		Windshield Wipers	
Oil Pressure		Transmission Shift		Glass	
Instruments		Horn		Heaters & Defrosters	
Road Test		Steering Play		Shutdown Operation	

REAR AXLE

ITEM		ITEM		ITEM	
Differential		Shackles		Spring Leaves	
Pinion Seal		Breathers		Axle Housing	
Fluid Level (Pts)		Drums & Hubs		Bk. Lines & Connections	
Shock Abs. & Linkage				Brake Lining	
Brackets				Brake Adjustment	
				Seals	

DRIVE LINE **CHASSIS FRAME**

ITEM		ITEM		ITEM	
Yokes & Splines		Tail Pipe		Lines & Fittings	
Flange Bolts		Muffler		Mounting Bolts	
U-Joints		Exhaust Pipe		Fuel Tank	
		Hangers			

FRONT AXLE

ITEM		ITEM		ITEM	
Brake Lining		Tie Rod Ends		Shocks	
Bk. Lines & Connections		Axle		Shackles & Brackets	
Brake Adjustment		U-Bolts		Linkage	
		Backing Plate		Steering Gear, U-Joint	

Table of Contents

Marion County Schools
300 Knights Way
Lebanon Ky 40033

"B"

(V) ITEM O.K. (O) ADJUSTMENTS MAKE (X) REPAIRS NEEDED
WRITE UP ON WORK ORDER

TRANSMISSION

ITEM		ITEM		ITEM	
Leaks		Modulator		Linkage	
Fluid level (Qts)		Breather		Cable	
Shift Linkage		Mountings		Park Brake	

PARKING BRAKE

ENGINE

ITEM		ITEM		ITEM	
Water Leak		Battery Volts		Water Pump	
Radiator		Alternator		P\S Pump	
Fan Belt		Battery		Antifreeze	
Fuel Leak		Oil Filter		Oil Leaks	
Exhaust Flanges		Oil Pressure		Oil Change	
				Grease All Fittings	

CAB AND BODY

ITEM		ITEM		ITEM	
Handles & Mirrors		Seat Upholstery		License Plate	
Seat Belts		Emergency, Safety Equip.		Fuel Cap	
Doors & Stops		Fenders		Hood & Latches	
Door Handles & Hinges		Body Panels		Sun Visor	
Seals, Weather Strips		Bumpers		Lights and Reflectors	
Underdash Wiring					
Radio					

WHEELS AND TIRES

ITEM		ITEM		ITEM	
Alignment		Left Front Replacement		Left Front Air Pressure	
Wheels & Rims		Right Front Replacement		Right Front Air Pressure	
Lugs & Studs		Left Rear . Replacement		Left Rear . Air Pressure	
Tire Balance		Right Rear . Replacement		Right Rear . Air Pressure	

Table of Contents

Marion County Schools
300 Knights Way
Lebanon Ky 40033

KENTUCKY DEPARTMENT OF EDUCATION
PREVENTIVE MAINTENANCE INSPECTION REPORT "D"

DATE:____/_____/_____ VEHICLE NUMBER _____

ODOMETER:_____

INSPECTOR:_____

(V) ITEM IS O.K. **(O) ADJUSTMENTS MADE** **(X) REPAIRS NEEDED WRITE ON WORK ORDER**

ROAD TEST ON LOT

ITEM		ITEM		ITEM	
Engine Oil (Qts. Low)		Brake Performance		Parking Brake	
Ignition Switch		Pedals & Pads		Windshield Washer	
Engine Operation		Drive Test (On Lot)		Windshield Wipers	
Oil Pressure		Transmission Shift		Glass	
Instruments		Horn		Heaters & Defrosters	
Road Test		Steering Play		Shutdown Operation	

REAR AXLE

ITEM		ITEM		ITEM	
Differential		Shackles		Spring Leaves	
Pinion Seal		Breathers		Axle Housing	
Fluid Level (Pts)		Drums & Hubs		Bk. Lines & Connections	
Shock Abs. & Linkage				Brake Lining	
Brackets				Brake Adjustment	
				Seals	

DRIVE LINE

ITEM		ITEM		ITEM	
Yokes & Splines		Tail Pipe		Lines & Fittings	
Flange Bolts		Muffler		Mounting Bolts	
U-Joints		Exhaust Pipe		Fuel Tank	
		Hangers			

CHASSIS FRAME

FRONT AXLE

ITEM		ITEM		ITEM	
Brake Lining		Tie Rod Ends		Shocks	
Bk. Lines & Connections		Axle		Shackles & Brackets	
Brake Adjustment		U-Bolts		Linkage	
		Backing Plate		Steering Gear, U-Joint	

Marion County Schools
300 Knights Way
Lebanon Ky 40033

"D"

(V) ITEM O.K. (O) ADJUSTMENTS MAKE (X) REPAIRS NEEDED WRITE UP ON WORK ORDER

TRANSMISSION

ITEM		ITEM		ITEM	
Leaks		Modulator		Linkage	
Fluid level (Qts)		Breather		Cable	
Shift Linkage		Mountings		Park Brake	

PARKING BRAKE

ENGINE

ITEM		ITEM		ITEM	
Water Leak		Battery Volts		Water Pump	
Radiator		Alternator		P\S Pump	
Fan Belt		Battery		Antifreeze	
Fuel Leak		All Filter		Oil Leaks	
Exhaust Flanges		Oil Pressure		Oil Change	
		All Fluids		Grease All Fittings	

CAB AND BODY

ITEM		ITEM		ITEM	
Handles & Mirrors		Seat Upholstery		License Plate	
Seat Belts		Emergency, Safety Equip.		Fuel Cap	
Doors & Stops		Fenders		Hood & Latches	
Door Handles & Hinges		Body Panels		Sun Visor	
Seals, Weather Strips		Bumpers		Lights and Reflectors	
Underdash Wiring					
Radio					

WHEELS AND TIRES

ITEM		ITEM		ITEM	
Alignment		Left Front Replacement		Left Front Air Pressure	
Wheels & Rims		Right Front Replacement		Right Front Air Pressure	
Lugs & Studs		Left Rear . Replacement		Left Rear . Air Pressure	
Tire Balance		Right Rear . Replacement		Right Rear . Air Pressure	

Upgrading to Current Specifications.

Upgrading is at Local district option.

All buses are to be maintained as delivered from the factory.

A district that wishes to replace parts with new parts shall do so with the cooperation of the OEM and in full compliance with the current specification.

A district may add optional equipment listed in section IV of the specification provided he does so pursuant the OEM's installation instructions.

1. Some examples of upgrades are listed below:
    a. Tire up grades. The new tire must be mounted on 8.25 rims, must be of the same load rating as the OE tire and must be in compliance with the current specification.
    b. Seat covers. Non-fire block seat covers may be replaced with fire block covers (mat Kevlar only). Jersey Knit fire block covers may be replaced with mat Kevlar covers.
    c. Complete mirror systems may be upgraded to FMVSS 111 systems but Individual parts of the system may not be changed
    d. Rear signage may be added only if it fully meets the current specification.
    e. Lights may be upgraded to L.E.D.'s with the OE's approval and in full compliance with the Kentucky Minimum Specifications. This requires replacement in complete sets by functional groups.

Any upgrade must be in full compliance with current specifications and in cooperation with the Original Equipment Manufacturer. No upgrade is required except pursuant to a recall.

A District wishing to refurbish a bus must use the " Bus Refurbishment Specification" listed in the "Kentucky Minimum Specifications for School Buses, Revised 2012" in order to avoid excess liability.

Memorandum

Subject: Select Transportation Directors

From: Kay Kennedy, Director
Division of District Support

Date: August 20, 2007

Subject: Recommendations For use of Carpenter Buses

It has been four years since the Alachua County, Florida School Bus rollover incident. In this incident the roof section of the body separated from the remainder of the body. As a result of this incident and the follow up by the National Highway Traffic Safety Administration a memorandum was sent from this Office asking local districts take certain actions. The Department wishes to reiterate these recommendations at this time.

The Department recommends that these buses be taken out of service as soon as possible and sold with a material value only or "junk" title to preclude their sale to unsuspecting purchasers.

This advisory applies to all Carpenter buses built at the Mitchell, Indiana plant prior to 1996. These buses use a wall and cap construction method that includes a carlin rail. The welds on this carlin rail are subject to breakage over time and must be inspected monthly if the bus is to remain in service. All School bus inspectors have been trained to inspect these welds.

Any cracked or broken welds must be repaired by a certified welder as be taken out of service until these repairs are made

If you have questions, contact Dave Mangum or myself at (502) 564-4718.

KK/DM

cc. Dr. Larry Stinson

Table of Contents

Kentucky Department of Education

KENTUCKY DEPARTMENT OF EDUCATION

CAPITAL PLAZA TOWER • 500 MERO STREET • FRANKFORT, KENTUCKY 40601

Gene Wilhoit, Commissioner
(502) 564-4770

MEMORANDUM

TO: Select Transportation Directors

FROM: Ronald L. Brown, Director
Division of School Finance

DATE: August 18, 2003

SUBJECT: Recommendations For Use of Carpenter Buses

The National Highway Transportation Safety Administration (NHTSA) has released its findings in their investigation of the Alachua County, Florida rollover accident.

NHTSA recommends that the following actions be taken with respect to any Carpenter school bus built in the Mitchell, Indiana plant that has been found to have cracked or broken welds in the roof structure:

- The bus should be taken out of service and replaced as soon as practicable.
- If the bus must continue in use, the cracked or broken welds should be repaired as soon as possible by a certified welder (see number 4, page 2).
- In order to minimize the risk of a rollover, the bus should be used on routes that operate in low speed environments.

Buses that are taken out of service should have "scrap" or equivalent language marked on their titles to preclude their sale to unsuspecting purchasers.

The Department of Education concurs with these recommendations and asks local districts to take the following actions:

1. Inspect all Carpenter buses built in Mitchell, Indiana between 1986 and 1995 that have not been previously inspected. Record inspection on a standard work order.
2. If cracks are found, remove the bus from service.

3. If the bus is to be sold as surplus, sell with a "scrap" title to prevent it from being put back into service.

4. If the bus must remain in service, repairs should be made by a certified welder by grinding out and rewelding the post to the carlin rail. Document the work on a standard work order and file in the vehicle folder.

5. Under no circumstances should these buses be used for extra-curricular or co-curricular trips.

We hope this provides guidance for the use of these buses. The KISTA Used Bus Sale was on hold. This allowed districts to reevaluate their needs. These buses are herby released and should be sold under the aforementioned guidelines.

If you have any questions, please contact Dave Mangum or myself at (502) 564-4718.

RLM/DM:sp

cc: Kyna Koch

Kentucky Department of Education

KENTUCKY DEPARTMENT OF EDUCATION

CAPITAL PLAZA TOWER • 500 MERO STREET • FRANKFORT, KENTUCKY 40601

Gene Wilhoit, Commissioner
(502) 564-4770

MEMORANDUM

TO: Select Superintendents

FROM: Ronald L. Brown, Director
Division of School Finance

DATE: April 29, 2003

SUBJECT: Inspection of Carpenter Body Company Buses

A recent single vehicle accident in Alachua County Florida revealed a structural defect in certain Carpenter Manufactured Bus Bodies. These bus bodies were built between 1986 and 1996 at the Mitchell, Indiana Plant. They have six-digit body numbers beginning with a one (1). Body numbers beginning with a four (4) were built in Richmond, Indiana, and are not affected.

The affected vehicles use the "wall and cap" method of construction in which the walls of the bus body are joined to the roof section by welding along a carlin rail. The broken welds in the Florida accident were at the point of connection between the window post and the carlin rail.

We expect full inspection procedures to be forthcoming from the National Transportation Safety Board in the near future after they have completed their investigation of the Florida accident. In the meantime, we suggest that Carpenter buses be inspected as part of their regular monthly preventative inspection. If failures are found the, bus should be deadlined and a report should be made to this office.

I have included photos of the affected areas for your convenience.

If you have any questions or problems to report, please contact Dave Mangum at (502) 564-4718.

RB:DM:lw

Enclosures

cc: Transportation Director

Bus on Roof at Crash Scene

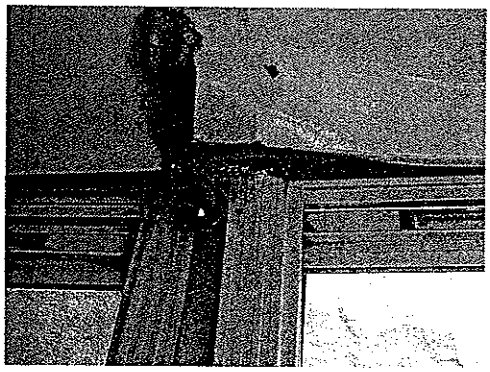

General Location of Potential Defect (shown on crash bus)

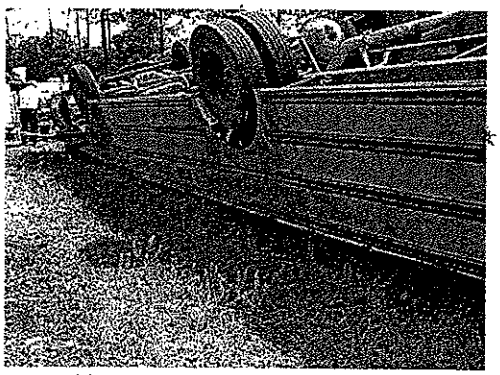

Side View at Crash Scene (right side)

Light Panel Removed for Inspection

Post-crash Interior (right side, welds broken; roof lifted and supported)

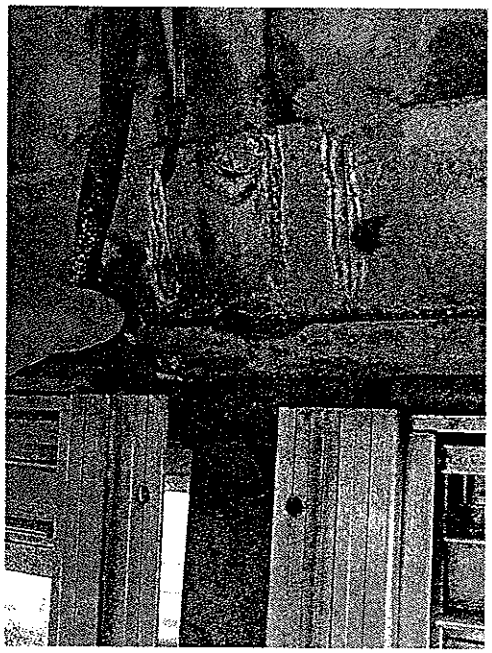

Cracked Weld (about ½ inch above wire grommet; wire held to side for visibility)

Table of Contents

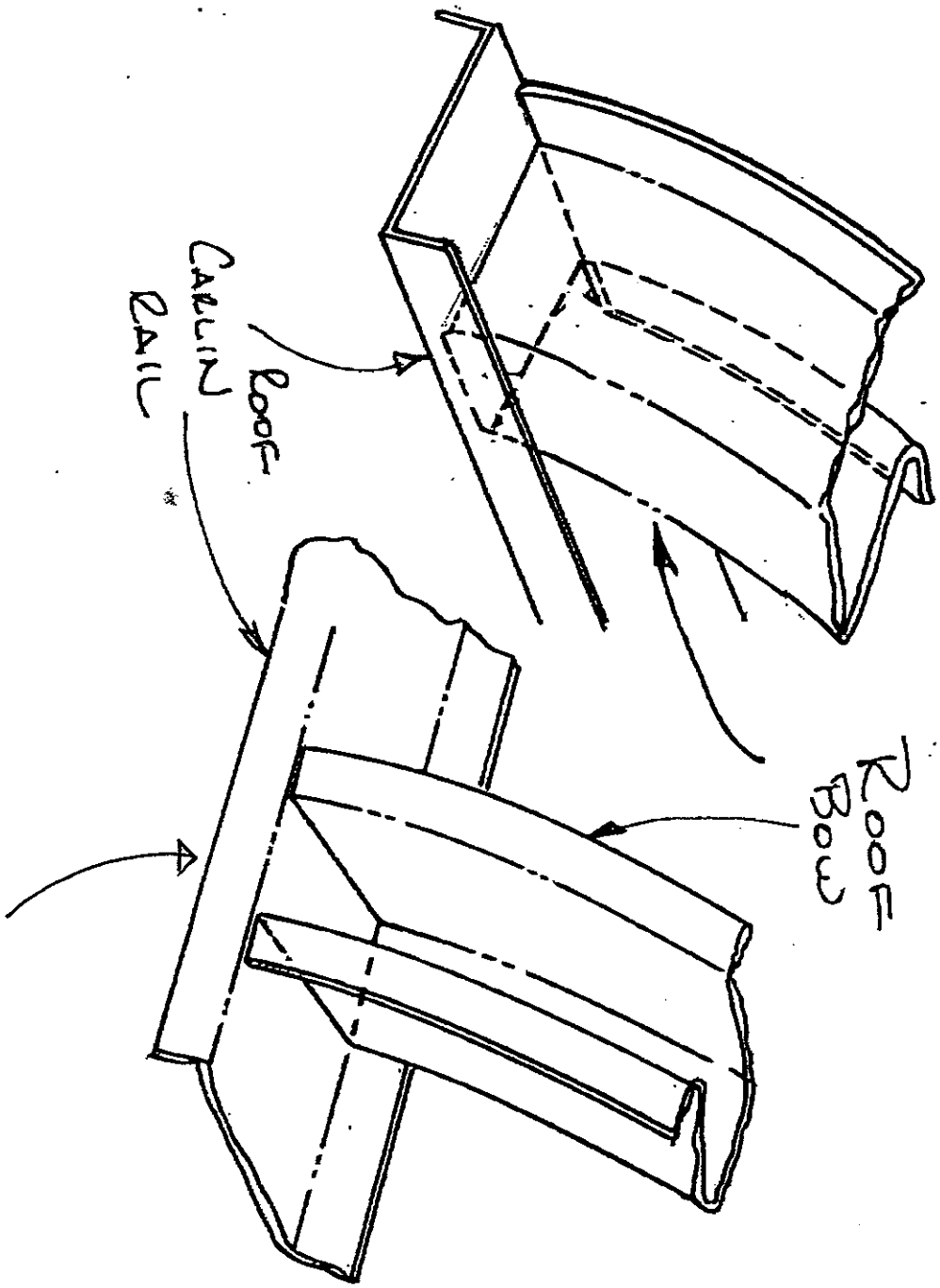

Table of Contents

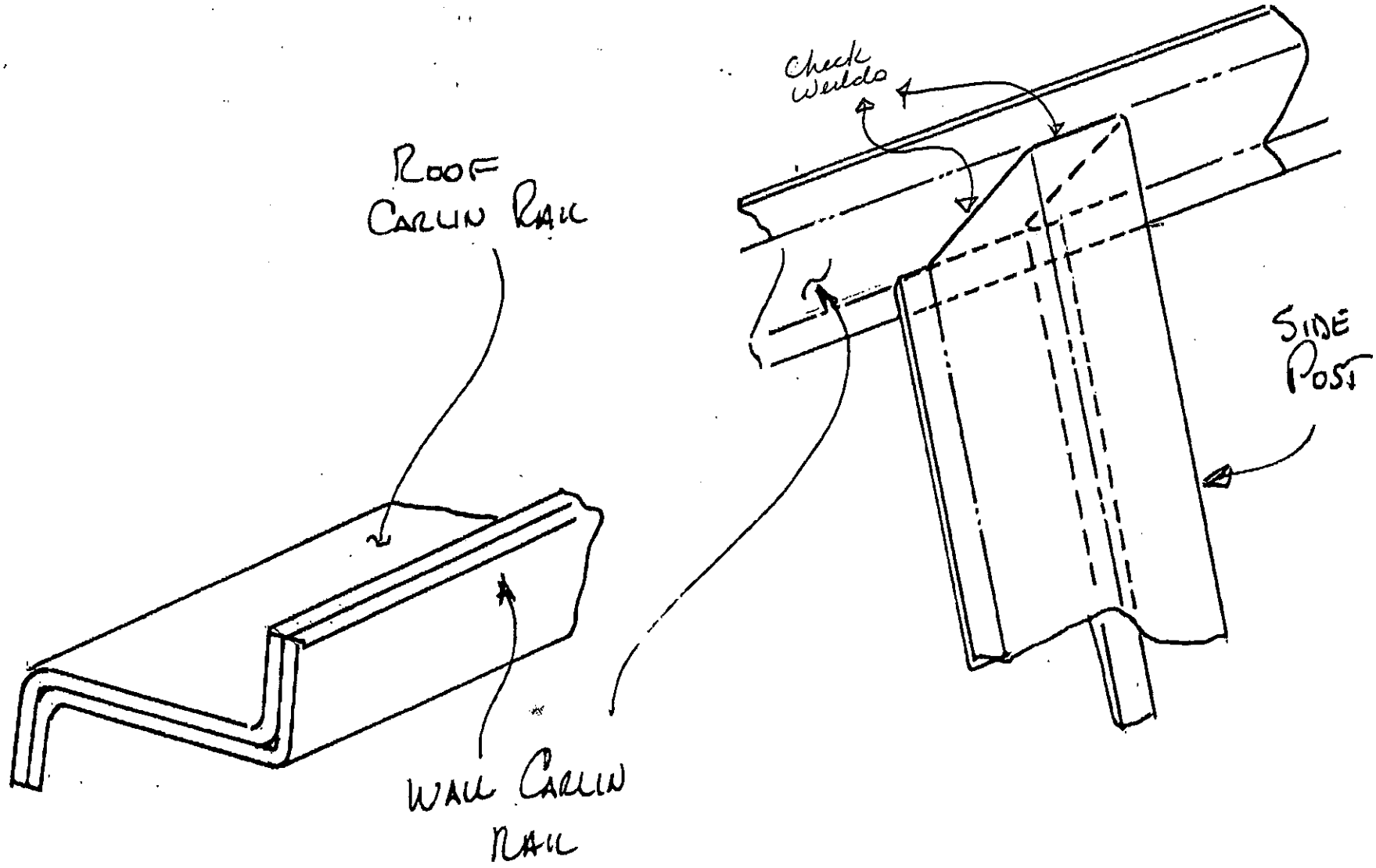

Designation: D 6210 – 08

Standard Specification for Fully-Formulated Glycol Base Engine Coolant for Heavy-Duty Engines[1, 2]

This standard is issued under the fixed designation D 6210; the number immediately following the designation indicates the year of original adoption or, in the case of revision, the year of last revision. A number in parentheses indicates the year of last reapproval. A superscript epsilon (ε) indicates an editorial change since the last revision or reapproval.

1. Scope*

1.1 This specification covers the requirements for fully-formulated glycol base coolants for cooling systems of heavy-duty engines. When concentrates are used at 40 to 60 % glycol concentration by volume in water of suitable quality, (see Appendix X1), or when prediluted glycol base engine coolants (50 volume % minimum) are used without further dilution, they will function effectively during both winter and summer to provide protection against corrosion, cavitation, freezing, and boiling.

1.2 This specification is intended to cover the requirements for engine coolants prepared from virgin or recycled ethylene or propylene glycol.

NOTE 1—Committee D15 has not substantially studied the impact of using recycled glycols from sources such as:

- glycol bottoms
- polyester manufacturing waste
- aircraft and runway deicers
- medical waste

to prepare engine coolants. However, several serious cases of very poor performance have been reported and substantiated in heavy duty fleets when recycled glycols from sources such as above have been used to prepare engine coolants. Efforts are underway to more clearly define the purity requirements for glycols used to prepare engine coolants meeting this specification, whether from recycled engine coolants or other sources.

1.3 The coolants governed by this specification are categorized as follows:

Coolant Type	Description
I-FF	Ethylene glycol base concentrate
II-FF	Propylene glycol base concentrate
III-FF	Ethylene glycol predilute (50 vol %)
IV-FF	Propylene glycol predilute (50 vol %)

1.4 Coolant concentrates meeting this specification do not require any addition of Supplemental Coolant Additive (SCA) until the first maintenance interval when a maintenance dose of SCA is required to continue protection in certain heavy duty engine cooling systems, particularly those of the wet cylinder liner-in-block design. The SCA additions are defined by and are the primary responsibility of the engine manufacturer or vehicle manufacturer. If they provide no instructions, follow the SCA supplier's instructions.

1.5 The values stated in SI units are to be regarded as standard. The values given in parentheses are for information only.

1.6 *This standard does not purport to address all of the safety concerns, if any, associated with its use. It is the responsibility of the user of this standard to establish appropriate safety and health practices and determine the applicability of regulatory limitations prior to use.*

2. Referenced Documents

2.1 *ASTM Standards:*[3]

D 1126 Test Method for Hardness in Water

D 1293 Test Methods for pH of Water

D 3306 Specification for Glycol Base Engine Coolant for Automobile and Light-Duty Service

D 4327 Test Method for Anions in Water by Chemically Suppressed Ion Chromatography

D 5828 Test Method for Compatibility of Supplemental Coolant Additives (SCAs) and Engine Coolant Concentrates

2.2 *Other Standards:*[4]

Federal Method 2540B Total Dissolved Solids Dried at 103–105°C

3. General Requirements

3.1 Concentrated and prediluted coolants shall meet all of the physical, chemical and performance requirements of Specification D 3306., Tables 1, 2, and 3.

3.2 The coolant concentrate mixed with water or the prediluted coolant, when maintained with maintenance doses of

[1] This specification is under the jurisdiction of ASTM Committee D15 on Engine Coolants and is the direct responsibility of Subcommittee D15.07 on Specifications.

Current edition approved Oct. 1, 2008. Published November 2008. Originally approved in 1998. Last previous edition approved in 2006 as D 6210 - 06.

[2] A research report is available from ASTM International Headquarters. Request RR:D15–1023.

[3] For referenced ASTM standards, visit the ASTM website, www.astm.org, or contact ASTM Customer Service at service@astm.org. For *Annual Book of ASTM Standards* volume information, refer to the standard's Document Summary page on the ASTM website.

[4] Standard Method for the Examination of Water and Wastewater, American Public Health Association, et al, 1015 15th Street, N.W. Washington, DC 20005

*A Summary of Changes section appears at the end of this standard.

Copyright © ASTM International, 100 Barr Harbor Drive, PO Box C700, West Conshohocken, PA 19428-2959, United States.

SCA in accordance with the engine manufacturer's recommendations, and those on the product label, shall be suitable for use in a properly maintained cooling system in normal service for a minimum of two years (see Appendix X1).

4. Additional Requirements

4.1 The coolant concentrate or prediluted coolant additionally shall provide protection in operating engines against cavitation corrosion (also termed liner pitting) and against scaling of internal engine hot surfaces. Hot surfaces typically are within the engine head, head spacer, upper cylinder liner, or liquid cooled exhaust manifold. ASTM has test methods under development for both cavitation corrosion and hot surface scaling. Until these procedures are approved as ASTM standards, the mandatory requirements of Annex A1 shall apply.

4.2 Lack of compatibility between the coolant and SCA product's chemistry may cause the solute to precipitate out of solution, with potential adverse effects in the vehicle or engine cooling system. A test procedure for compatibility (Test Method D 5828) has been developed and approved. The compatibility of SCA and coolant concentrate solutions meeting this specification shall be determined using D 5828 and the results reported.

4.3 Both the concentrated and prediluted coolants shall contain less than 50 μg/g sulfate ion.

5. Keywords

5.1 cavitation; fully-formulated heavy-duty engine coolant; supplemental coolant additive maintenance dose

ANNEX

(Mandatory Information)

A1. CHEMICAL REQUIREMENTS FOR FULLY FORMULATED HEAVY DUTY ENGINE COOLANT

A1.1 Laboratory data or in-service experience demonstrating a positive influence on reducing cavitation corrosion in an operating engine is required.

A1.1.1 In-service qualification tests may consist of single- or multiple-cylinder engine tests. At the option of the engine or vehicle manufacturer, such testing may be conducted in "loose engines" or in engines fully integrated into an application, such as a vehicle, a power boat, or a stationary power source. One such test has been developed.[5]

A1.2 Several chemical compositions have been tested extensively by producers and users and satisfactorily minimize cylinder liner cavitation in actual test engines. Coolants meeting either of the following compositions are regarded as passing the requirements of A1.1:

A1.2.1 A minimum concentration of nitrite (as NO_2^-) of 1200 μg/g (ppm) in the 50 volume % predilute coolant, or

A1.2.2 A minimum combined concentration of nitrite (as NO_2^-) plus molybdate (as MoO_4^{-2}) in the 50 volume % predilute coolant of 780 μg/g (ppm). At least 300 μg/g (ppm) each of NO_2^- and MoO_4^{-2} must be present.

A1.2.3 The above concentrations are doubled for coolant concentrates.

A1.3 Chemical composition requirements for cavitation corrosion protection will be removed from this specification and replaced with an ASTM test method when a test method is developed and adopted.

A1.4 Both concentrated and prediluted coolants under this specification must contain additives to minimize hot surface scaling deposits. Certain additives (polyacrylate and other types) minimize the deposition of calcium and magnesium compounds on heat rejecting surfaces. No specific chemical requirements for hot surface scaling and deposits resistance have been established at this time. A test procedure is under development and will be incorporated into the specification when a procedure is approved by ASTM.

[5] "A Comparison of Engine Coolant in an Accelerated Heavy-Duty Engine Cavitation Test," SAE Technical Paper 960883, SAE International, 400 Commonwealth Drive, Warrendale, PA 15096–0001.

APPENDIX

(Nonmandatory Information)

X1. COOLANT MAINTENANCE FOR HEAVY DUTY ENGINES

X1.1 *Engine Coolant*—Cooling system fill for a heavy duty engine consists of water and fully formulated heavy duty coolant concentrate or fully formulated prediluted heavy duty coolant.

X1.1.1 *Water*:

X1.1.1.1 Water quality affects the efficiency of coolant additives. When untreated, all water is corrosive. Water having a high mineral content or corrosive materials is unfit for cooling system use.

X1.1.1.2 When preparing coolant mixtures, the water should be of such quality that it does not contain excessive solids, hardness salts, sulfates, or chlorides. In the absence of specific recommendations from the engine or vehicle manufacture, see Table X1.1. Contact your local water department, the responsible government agency, or submit a water sample for analysis if there is a question on water quality.

X1.1.2 *Coolant Concentrates*:

X1.1.2.1 The coolant concentration should be maintained between 40 and 60 % glycol by volume, depending on the engine operating environment. Freeze protection will be provided in accordance with Table X1.2.

X1.1.3 *Prediluted Engine Coolants*:

X1.1.3.1 Prediluted glycol base engine coolants (50 volume % minimum) should be used without further dilution. If additional freeze protection is required, coolant concentrate may be added to the prediluted engine coolant to increase the total glycol content in the cooling system (see Table X1.2)

X1.1.4 *Supplemental Coolant Additive*:

X1.1.4.1 SCAs extend the life of the coolant by replenishing the additives that deplete during normal operation. SCAs, however, do not extend the freeze protection provided by the coolant concentrate.

X1.1.4.2 Heavy-duty engine users experience has shown that compositions below those defined in Annex A1.2 may not provide long term protection against cavitation corrosion (liner pitting). User experience and published information shows the presence of nitrite in an SCA or fully-formulated heavy-duty coolant is particularly effective in providing maximum protection.

TABLE X1.1 Suggested Water Quality Limits[A]

Property	Specific Values	Test Method
Total solids, µg/g (ppm (grains/gal))	340 (20) max	Fed Method 2540B[B]
Total hardness, µg/g (ppm (grains/gal))	170 (10) max	D 1126
Chloride (Cl), µg/g (ppm (grains/gal))	40 (2.4) max	D 4327
Sulfate (SO_4), µg/g (ppm (grains/gal))	100 (5.9) max	D 4327
pH	5.5 to 9.0	D 1293

[A]Adopted from a survey by the D 15 Water Quality Task Force.
[B]Federal Method 2540B, "Total Dissolved Solids Dried at 103–105°C."[4]

TABLE X1.2 Freeze Protection

	Approximate Freeze Protection Temperature, °C (°F)	
Glycol Content, %	Coolant Type I-FF	Coolant Type II-FF
40	–24 (–12)	–21 (–6)
50	–37 (–34)	–32 (–26)
60	–52 (–62)	–48 (–54)

X1.1.4.3 New technology consisting of other chemistries may provide satisfactory protection. Such chemistries can be established by agreement between producers and users upon demonstration of performance. Such demonstrations can consist of comparative laboratory cavitation tests or comparative damage rating from testing in operating engines. One or both of these options may be applied as determined in a specific agreement between parties. An engine test has been developed.[5]

X1.2 *Coolant Maintenance Recommendations*:

X1.2.1 If any of the following recommendations differ, follow the engine or vehicle manufacturer's recommendations.

X1.2.2 Use the coolant concentration recommended in this specification.

X1.2.3 Drain and flush the cooling system as recommended by the engine or vehicle manufacturer.

X1.2.4 Use water that meets the requirement in Table X1.1.

X1.2.5 Use accurate, reliable equipment, such as a refractometer, to measure coolant concentrate levels for freeze protections.

X1.2.6 Use the SCA manufacturer's recommended test kit when testing the coolant for proper additive concentration. Test kits shall indicate the degree of liner pitting protection present in the coolant.

X1.2.7 Check freezing point at two different levels when coolant concentrate and water is premixed and stored in bulk or drums to be sure mixing is complete before use.

X1.2.8 Use coolant mixed at the desired proportions for make-up.

X1.2.9 Use SCAs at the recommended maintenance dosage and intervals to control deposits, corrosion, water pump damage, and liner pitting.

X1.2.10 Periodically check bulk premixed coolant storage tanks for separation of chemicals and contamination.

X1.2.11 DO NOT add undiluted coolant concentrate as make-up coolant for coolant Types I-FF and II-FF.

X1.2.12 DO NOT add plain water as make-up coolant.

X1.2.13 DO NOT exceed 60 % coolant concentrate in Type I-FF and Type II-FF coolants. A coolant concentrate level greater than 68 % actually reduces freeze protection in ethylene glycol base coolants. The maximum recommended coolant concentrate level is 60 % which provides the freeze protection shown in X1.1.2.

X1.2.14 DO NOT exceed the manufacturer's recommended dosage of SCA or the recommended concentration of coolant concentrate. Over-concentration can result in plugged radiators, heater cores, and charge air coolers and can also cause water pump seal leaks.

X1.2.15 DO NOT reuse coolant that has been drained from a vehicle.

X1.2.16 DO NOT precharge the cooling system with SCA when using fully-formulated heavy-duty engine coolant.

X1.2.17 DO NOT use soluble oil additives.

X1.2.18 DO NOT use methyl alcohol or methoxypropanol base coolant concentrates.

X1.2.19 DO NOT use anti-leak additives if engine cooling system is equipped with a coolant filter, as this may plug the filter element. For all other cooling systems, follow the recommendations of the engine or vehicle manufacturer.

SUMMARY OF CHANGES

Committee D15 has identified the location of selected changes to this standard since the last issue (D 6210–06) that may impact the use of this standard.

(*1*) Revised Section 3.1 to allow the use of recycled glycol which was the intent when the specification was created. Coolants meeting this specification must meet the physical, chemical, and performance requirements of D 3306. The 25 µg/g (ppm) chloride limit is retained.

(*2*) The SCA compatibility information previously in A1.5 has been revised and placed in 4.2 along with a report requirement for D 5828.

(*3*) A change from ppm to µg/g has been made in 4.3, A1.2.1, A1.2.2 and in Table X1.1.

ASTM International takes no position respecting the validity of any patent rights asserted in connection with any item mentioned in this standard. Users of this standard are expressly advised that determination of the validity of any such patent rights, and the risk of infringement of such rights, are entirely their own responsibility.

This standard is subject to revision at any time by the responsible technical committee and must be reviewed every five years and if not revised, either reapproved or withdrawn. Your comments are invited either for revision of this standard or for additional standards and should be addressed to ASTM International Headquarters. Your comments will receive careful consideration at a meeting of the responsible technical committee, which you may attend. If you feel that your comments have not received a fair hearing you should make your views known to the ASTM Committee on Standards, at the address shown below.

This standard is copyrighted by ASTM International, 100 Barr Harbor Drive, PO Box C700, West Conshohocken, PA 19428-2959, United States. Individual reprints (single or multiple copies) of this standard may be obtained by contacting ASTM at the above address or at 610-832-9585 (phone), 610-832-9555 (fax), or service@astm.org (e-mail); or through the ASTM website (www.astm.org).

Detailed Listing of Changes
Kentucky Minimum Specifications for School Buses
Revised 2013

Page 11. Add sentence to clarify diagnostics package to include the ability to force a regeneration of the diesel particulate filter.

SERVICE MANUALS

Body and/or chassis suppliers, including integral suppliers, shall provide each school district purchasing school buses with one complete set of the most current service manuals available or access to them electronically at no additional cost during the life of the bus including: Body, Chassis, Engine, Wiring locator, and Body parts manuals at no additional cost. Body and/or chassis suppliers shall also supply one copy of the first level diagnostic software for the engine, brakes and transmission or access to them at no additional cost during the life of the bus. The engine diagnostics package shall include the ability to force a regeneration using the diagnostic software if a forced regeneration on the diesel particulate filter using the diagnostic software if a regeneration button is not present. Body and chassis suppliers shall provide a downloadable version at the local district's request. Manuals and software shall be shipped on the basis of one complete set per school district with the bus invoice, prior to delivery of the completed school bus. If the new bus data port is incompatible with the previous year's data cables the vendor shall supply new cables on the basis of one complete cable per school district.

Page 22. Engine section. Add provision for oil filter accessibility.

(4) The oil filter shall be a minimum two (2) quart capacity. (1.79 quart net capacity) The oil filter shall be accessible for service without the use of special tools.

Page23. Add sentence to clarify the need to have the ability to do a forced regeneration on the vehicle diesel particulate filter.

EXHAUST SYSTEM

A total exhaust system, exhaust pipe, muffler and tailpipe shall be furnished by the chassis manufacturer, all routing to or through the bumper shall be manufactures standard for rear exhaust evacuation. The system shall be warranted for five years. ~~If~~ A manual regeneration mode ~~is~~ shall be included in the system. The control for the start of this system shall be designed or located to be accessible to a technician but not the driver. The Control shall be ether a manual switch in the electrical control panel or a start switch in the first line diagnostic program provided by the vendor. This requires the ability to force regeneration on the vehicle diesel particulate filter when the sensors indicate it is required.

Page 30. Add the option for a 72 passenger type C bus equipped with an Allison Automatic PTS2500 Transmission.

The following engines shall be equipped with the following automatic transmissions:

Engine	Horsepower	Capacity	Transmission	Standard/Option
INTERNATIONAL DT466E	190	34-52	PTS2500	STANDARD
INTERNATIONAL DT466E	215	66	PTS2500	STANDARD
INTERNATIONAL DT466E	215	66	PTS3000	OPTION
INTERNATIONAL DT466E	215	72-C	PTS3000	STANDARD
INTERNATIONAL DT466E	215	72-C	PTS2500	OPTION
INTERNATIONAL DT466E	215	70-78 FC	PTS3000	STANDARD
INTERNATIONAL DT466E	230-250	78-84 RE	PTS3000	STANDARD
CUMMINS ISB	190	34-52	PTS2500	STANDARD
CUMMINS ISB	210	66	PTS2500	STANDARD
CUMMINS ISB	210	66	PTS3000	OPTION
CUMMINS ISB	210	72-C	PTS3000	STANDARD
CUMMINS ISB	210	72C	PTS2500	OPTION
CUMMINS ISB	210	70-78 FC	PTS3000	STANDARD
CUMMINS ISB	230-250	78-84 RE	PTS3000	STANDARD

Transmissions shall be equipped with an automatic backup light switch. The chassis manufacturer shall be responsible for matching the transmission ratios, with respective engines within design parameters of the school bus operation.

Page 41. Add sentence to the Emergency Door Section. Require additional protection to keep the rear emergency door from swing too far and breaking the glass in the bottom panel.

The emergency door opening at floor level shall be constructed to provide a recessed seal. No seal extending above the floor line will be acceptable. The emergency door shall be held open in accordance with FMVSS 217, and shall be subject to the approval of the Pupil Transportation Branch at the pilot inspection. In addition, the door's maximum swing shall be limited to 130

degrees by the use of welting or strapping fastened to the door frame and the door. Door hinges shall have threaded grease fittings or an enclosed hinge designed to resist corrosion.

Page 50 Add additional vendor to supplier list.

STEP COVERING

Steps shall be covered with first quality, specially processed step covering material, Koroseal pebble top, Blue #71; RCA Rubber, Apex, Color #702; SMI Studded Step flooring Color #702, or approved equal. Step covering material shall have non-skid characteristics. The step covering shall have a contrasting white, turndown nosing. The lip of the turndown shall be molded in an approximate 90º shape and shall be an integral part of the tread. Pebble pattern-shall extend to the leading edge of the nosing on all but the top step and shall have corrosion and impact resistant polymeric or galvanized metal backing.

Page 59 Change in part number.

STOP SIGNAL ARM

Each school bus body shall be equipped with a stop arm meeting SAE Standard J1133. The location of the stop arm requires prior approval form the Pupil Transportation Branch and shall be:

1. Air-operated, SMC 29~~70~~80series with wind guard and high intensity school decal or approved equal, or
2. Electric operated Transpec Model 6100 series with wind guard and high intensity school decal or approved equal.

The lights on these stop arms shall be strobing LED.

Air-operated stop arms shall be installed on all chassis equipped with air brakes. An air-operated or electric-operated stop arm may be installed on all school bus chassis with hydraulic brakes.

Page 87 Add additional option for lift supplier.

ELECTRO-HYDRAULIC LIFT

Type "C" thirty-four (34) through sixty-six (66) passenger and type "A" twenty-two (22) passenger school buses may be equipped with an electro-hydraulic lift.

Thirty-four (34) through sixty-six (66) passenger body shells shall be equipped with a Braun Millennium series hydraulic lift Model L917IB standard. Local districts may request ~~or~~ Ricon S series S5510 or MaxonWL7 version C.

The above-mentioned lifts shall be rated at a minimum eight hundred (800) pounds working capacity, be equipped with a pressure relief switch for ground contact, and have automatic positioning at the floor level.

The successful bidder (Braun, Ricon, Maxon) shall provide factory support on an as need basis and up to five training classes for technicians during the contract period.

The controls pennant shall be mounted and accessible to the operator from the outside of the bus. It shall be protected by a re-settable circuit breaker within the lift manufacturer's specifications. The outside vertical post shall be padded to below barrier height. The platform shall be thirty-inches wide at a minimum, with the power provided through the ignition switch energizing a separate solenoid (White-Rogers 123-105-211 or Prestolite 28308. The solenoid on all twenty-four (24)-passenger buses shall be located under the hood. A ground cable shall be installed from the lift frame to the vehicle frame of the bus.

Page 111. Add section to allow the installation of Universal Child Restraint Anchorage (UCRA) seats at the local districts option.

UCRA SEATS

When Universal Child Restraint Anchorage(UCRA) seats are installed on a Kentucky School Bus they shall be placed in such a way as to eliminate the possibility that a seat back will be

double loaded. On all buses equipped with a left side emergency door, the UCRA seats shall be installed forward of the left side emergency door beginning from the rear seated position to the front seated position of the bus.
Buses **not** equipped with a left side emergency door (34 and 52 passenger shell size) shall have the UCRA seats installed from rear to front. Local district personnel will load the students from the rear positioned UCRA seat forward and insure that no unrestrained passenger is seated behind a restrained passenger unless a barrier is present to avoid seat back double loading.

ALL UCRA seats shall be available for purchase by school districts as a local school district purchase option.

Vendors installing this option shall submit a floor plan to the Department of Education for approval prior to accepting the order.

Table of Contents

Product Recall

To: ALL DEALERS

From: TRACY SAUERBREY – WARRANTY/RECALL DEPARTMENT

Subject: RECALL 11V-204/11V-205 Federal Data Label, Tire & Loading Placard

Date: May 17, 2011

Enclosed are copies of the customer notification letter and the repair procedures for Recall 11V-204/11V-205. This recall involves certain Minotour school and non school model buses manufactured between April 17, 2000 and December 21, 2009. The non-conformity involves the certification label. The labels state load range "D" tires. The vehicles are equipped with load range "E" tires. Incorrect tire information may lead to tire overloading or over inflation possibly resulting in a tire failure which may lead to a vehicle crash.

This is a universal notification sent to all dealers. You may or may not have customers in your area affected by this recall. If owners in your area are subject to this recall, we have enclosed a printout listing those customers' names and addresses. If there is not a printout enclosed according to our records there are no units in your area involved**. If you have a printout and any of the units on it are still in your possession it is your responsibility to ensure the recall is performed before the unit is delivered to the customer. NEW PROCESS: NHTSA is requiring two different recall numbers and printouts for school versus non school units. If you have received two reports you will notice that Recall 11V-204 is for school buses and Recall 11V-205 is for non-school buses. This is the same recall with the same repair for both school and non school just a different recall number.**

The remedy will consist of replacing with a new label. It will take approximately .1hour (SRT 90-119). **Attached is a form that must be filed out completely to receive the new labels. There will be no parts handling.**

Thomas Built Buses has elected to notify all customers directly. Your customers will be contacting you to schedule an appointment for repairs.

If you know of any customers who own or operate a Thomas bus in this recall, whose name and address is NOT listed or is INCORRECTLY listed on the enclosed printout, please promptly notify Thomas Built Buses of that additional information in writing. Thank you for your cooperation and assistance.

Tracy
Enclosures: Customer Letter Repair Procedure Printout (if applicable)

May 24, 2011

Recall 11V-204

This notice is sent to you in accordance with the requirements of the National Traffic and Motor Vehicle Safety Act. Thomas Built has decided that certain Minotour model school buses manufactured between April 17, 2000 and August 29, 2008 fail to conform to the requirements of Federal Motor Vehicle Safety Standard No. 110, "Tire Selection and Rims". These units are identified on the enclosed postcard (Form PSD 304).

The non-conformity involves the certification label. The labels state load range "D" tires. The vehicles are equipped with load range "E" tires. Incorrect tire information may lead to tire overloading possibly resulting in a tire failure which may lead to a vehicle crash.

You should immediately contact your Thomas Built Buses dealer for an appointment to have your vehicle modified. Thomas will remedy this noncompliance without charge. The remedy will consist of replacing all labels. It will take approximately .1 hour per unit **To arrange for repairs, contact your local Thomas Built Buses dealer. After the repair is made, please complete each postage paid card separately and return it to Thomas Built Buses to verify completion.**

The postcard must be filled out and returned:

Once the vehicle repair has been completed
Once it has been determined that the vehicle does not need repair
If you no longer own the vehicle
If the vehicle identified on the postcard has been exported, stolen, or destroyed/totaled

Federal law requires that any vehicle lessor receiving the recall notice must forward a copy of this notice to the lessee within 10 days.

If you have had your vehicle repaired due to this defect prior to receipt of this notice and you have incurred any costs, you may be eligible for reimbursement. For further information, please contact the Customer Support office at (336) 889-4871, 8 a.m. to 5 p.m. eastern standard time Monday through Friday. To find a dealer in your area please go to www.thomasbus.com.

If the defect is not remedied without charge and within a reasonable time which is not longer than 60 days after you tender the vehicle for repair, also please contact the Customer Support Office at (336) 889-4871, 8:00 a.m. to 5:00 p.m. Eastern Time, Monday through Friday. If you believe that Thomas Built Buses has failed or is unable to remedy the defect without charge longer than 60 days, you may submit a complaint to the Administrator, National Highway Traffic Safety Administration, 1200 New Jersey Avenue, S.E., Washington, DC 20590, or phone the Vehicle Safety Hotline at 1-888-327-4236 (TTY: 1-800-424-9153) or go to http://www.safercar.gov. In Canada, if after contacting your dealer and/or Manufacturer Customer Service you have additional questions with regards to this recall, you may contact Transport Canada – road Safety, 80 rue Noel, Gatineau, Quebec J8Z 0A1 or call 1-800-333-0510.

Sincerely,

Tracy Sauerbrey
Warranty/Recall Department

Enclosure

May 24, 2011

Recall 11V-205

This notice is sent to you in accordance with the requirements of the National Traffic and Motor Vehicle Safety Act. Thomas Built has decided that certain Minotour model non-school buses manufactured between April 17, 2000 and November 28, 2001 fail to conform to the requirements of Federal Motor Vehicle Safety Standard No. 110, "Tire Selection and Rims". These units are identified on the enclosed postcard (Form PSD 304).

The non-conformity involves the certification label. The labels state load range "D" tires. The vehicles are equipped with load range "E" tires. Incorrect tire information may lead to tire overloading possibly resulting in a tire failure which may lead to a vehicle crash.

You should immediately contact your Thomas Built Buses dealer for an appointment to have your vehicle modified. Thomas will remedy this noncompliance without charge. The remedy will consist of replacing all labels. It will take approximately .1 hour per unit. **To arrange for repairs, contact your local Thomas Built Buses dealer. After the repair is made, please complete each postage paid card separately and return it to Thomas Built Buses to verify completion.**

The postcard must be filled out and returned:

Once the vehicle repair has been completed
Once it has been determined that the vehicle does not need repair
If you no longer own the vehicle
If the vehicle identified on the postcard has been exported, stolen, or destroyed/totaled

Federal law requires that any vehicle lessor receiving the recall notice must forward a copy of this notice to the lessee within 10 days.

If you have had your vehicle repaired due to this defect prior to receipt of this notice and you have incurred any costs, you may be eligible for reimbursement. For further information, please contact the Customer Support office at (336) 889-4871, 8 a.m. to 5 p.m. eastern standard time Monday through Friday. To find a dealer in your area please go to www.thomasbus.com.

If the defect is not remedied without charge and within a reasonable time which is not longer than 60 days after you tender the vehicle for repair, also please contact the Customer Support Office at (336) 889-4871, 8:00 a.m. to 5:00 p.m. Eastern Time, Monday through Friday. If you believe that Thomas Built Buses has failed or is unable to remedy the defect without charge longer than 60 days, you may submit a complaint to the Administrator, National Highway Traffic Safety Administration, 1200 New Jersey Avenue, S.E., Washington, DC 20590, or phone the Vehicle Safety Hotline at 1-888-327-4236 (TTY: 1-800-424-9153) or go to http://www.safercar.gov. In Canada, if after contacting your dealer and/or Manufacturer Customer Service you have additional questions with regards to this recall, you may contact Transport Canada – road Safety, 80 rue Noel, Gatineau, Quebec J8Z 0A1 or call 1-800-333-0510.

Sincerely,

Tracy Sauerbrey
Warranty/Recall Department

Enclosure

Table of Contents

Product Recall

Campaign 11V-204/11V-205 Federal Data Label, Tire & Loading Placard

Name:

TBB Dealer Number:

Body Number(s): (All body numbers on this form will go to the same address)

Shipping Information:

Name:

Street Address:

City/State/ Zip:

Please forward completed form to Tracy Sauerbrey at Tracy.sauerbrey@daimler.com or fax to 336-878-4104
ATTN: TRACY SAUERBREY - RECALLS

RECALL #11V-204 & 11V-205

REPAIR PROCEDURE

MODEL: MINOTOUR

SUBJECT: FEDERAL DATA LABEL, TIRE & LOADING PLACARD

PAGE: 1 OF 2

IMPORTANT: READ ENTIRE PROCEDURE BEFORE BEGINNING.

1. Locate existing Federal Data Label and Tire & Loading Placard.
2. Confirm that the Data Label and Placard VIN number and Body number match existing Data Label and Placard.
3. Remove existing clear Cover. Start in one corner as shown in **Figure 1.**
4. Carefully, remove "VOID" remains with razor blade. **Figure 2**

Figure 1

Figure 2

5. Remove any leftover adhesive with an adhesive remover.
6. Clean mounting location with a general purpose cleaner; wipe dry.

Note: In steps 7 & 8, you are instructed to install the Federal Data Label and the Tire & Loading Placard. Due to limited space, install these labels within 1/8" of each other.

7. Install the new Data Label in the area shown in **Figure 3.**
8. Install the new Placard 1/8" above the Data Label. **Figure 4**

Figure 3

Figure 4

9. Cover all new labels with the new Clear Acetate Label Cover(s). **Figure 5.**

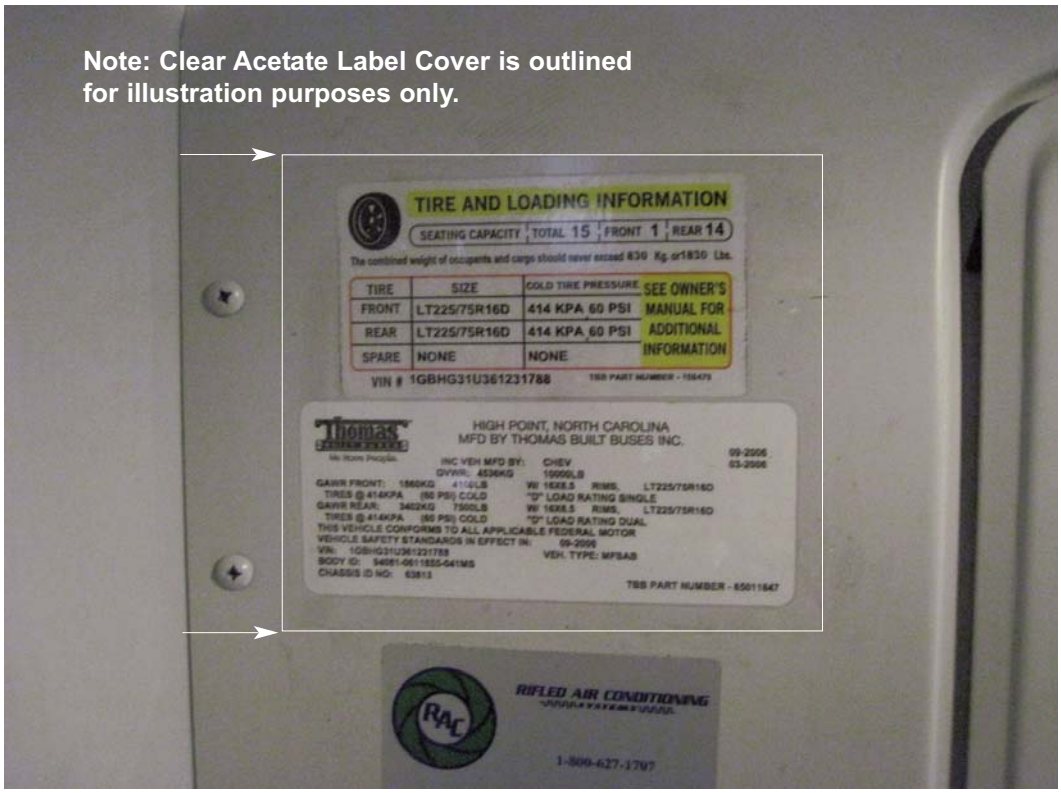

Figure 5

Table of Contents

Product Recall

To: ALL DEALERS

From: TRACY SAUERBREY – WARRANTY/RECALL DEPARTMENT

Subject: RECALL 11V-222/11V-223 EM1 Gen V Evaporator Units - Carrier

Date: May 13, 2011

Enclosed are copies of the customer notification letter and the repair procedures for Recall 11V-222/11V-223. This recall involves certain MVP-EF, Saf-T-Liner C2, HDX, FS-65 and Minotour school and non school model buses manufactured between January 2, 2006 and January 31, 2011. The defect involves the Carrier EM-1 units. These may have a fuse holder defect, in which, due to time and temperature, the fuse holder may relax. Through relaxation of fuse holder contacts over time, a high-resistance connection may result, possibly producing arching. The arching may produce melting of the fuse holder or ignition of the fuse holder, which may cause flame or smoke to propagate within the EM-1 unit.

This is a universal notification sent to all dealers. You may or may not have customers in your area affected by this recall. If owners in your area are subject to this recall, we have enclosed a printout listing those customers' names and addresses. If there is not a printout enclosed according to our records there are no units in your area involved**. If you have a printout and any of the units on it are still in your possession it is your responsibility to ensure the recall is performed before the unit is delivered to the customer. NEW PROCESS: NHTSA is requiring two different recall numbers and printouts for school versus non school units. If you have received two reports you will notice that Recall 11V-222 is for school buses and Recall 11V-223 is for non-school buses. This is the same recall with the same repair for both school and non school just a different recall number.**

The remedy will consist of inspection to determine if the unit requires the rework. If it is determined the unit needs rework a retrofit kit will be provided. It will take approximately .1 hour (SRT 90-116) for inspection and .5 hour (SRT 90-117) for this repair. Once it has been identified that the unit requires the fuse assembly upgrade, the serial number of the unit should be recorded for each affected unit. **Please contact Carrier Recall Hotline at (800) 793-4741 to receive your kit(s) at no charge. THE SERIAL NUMBER OF EACH UNIT WILL BE REQUIRED WHEN KITS ARE ORDERED. You will receive labor reimbursement by filing a warranty claim through Thomas Built Buses, Inc. This is a vendor recall therefore there will be no parts handling.**

Thomas Built Buses has elected to notify all customers directly. Your customers will be contacting you to schedule an appointment for repairs.

If you know of any customers who own or operate a Thomas bus in this recall, whose name and address is NOT listed or is INCORRECTLY listed on the enclosed printout, please promptly notify Thomas Built Buses of that additional information in writing. Thank you for your cooperation and assistance.

Tracy
Enclosures: Customer Letter Repair Procedure Printout (if applicable)

May 20, 2011

Recall 11V-222
TC2011-142

This notice is sent to you in accordance with the requirements of the National Traffic and Motor Vehicle Safety Act and the Canada Motor Vehicle Safety Act. Thomas Built has decided that a defect which relates to motor vehicle safety exists on certain Saf-T-Liner C2, HDX, MVP-EF, FS-65, and Minotour model school buses manufactured between January 2, 2006 and January 31, 2011. These units are identified on the enclosed postcard (Form PSD 304).

The defect involves the EM-1units. These may have a fuse holder defect, in which, due to time and temperature, the fuse holder may relax. Through relaxation of fuse holder contacts over time, a high-resistance connection may result, possibly producing arching. The arching may produce melting of the fuse holder or ignition of the fuse holder, which may cause flame or smoke to propagate within the EM-1 unit.

You should immediately contact your Thomas Built Buses dealer for an appointment to have your vehicle modified. Thomas will remedy this defect without charge. The remedy will consist of inspection to determine if the unit requires the rework. If it is determined the unit needs rework a retrofit kit composed of a new fuse holder configuration, inclusive of a fuse, connectors and complete installation instructions will be provided. It will take approximately .1 for inspection and .5 hour per unit for this repair. **To arrange for repairs, contact your local Thomas Built Buses dealer. After the repair is made, please complete each postage paid card separately and return it to Thomas Built Buses to verify completion.**

The postcard must be filled out and returned:

Once the vehicle has been completed
Once it has been determined that the vehicle does not need repair
If you no longer own the vehicle
If the vehicle identified on the postcard has been exported, stolen, or destroyed/totaled

Federal law requires that any vehicle lessor receiving the recall notice must forward a copy of this notice to the lessee within 10 days.

If you have had your vehicle repaired due to this defect prior to receipt of this notice and you have incurred any costs, you may be eligible for reimbursement. For further information, please contact the Warranty Department at (336) 889-4871, 8 a.m. to 5 p.m. eastern standard time Monday through Friday. To find a dealer in your area please go to www.thomasbus.com.

If the defect is not remedied without charge and within a reasonable time which is not longer than 60 days after you tender the vehicle for repair, also please contact the Warranty Department at (336)889-4871, 8:00 a.m. to 5:00 p.m. Eastern Time, Monday through Friday. If you believe that Thomas Built Buses has failed or is unable to remedy the defect without charge longer than 60 days, you may submit a complaint to the Administrator, National Highway Traffic Safety Administration, 1200 New Jersey Avenue, S.E., Washington, DC 20590, or phone the Vehicle Safety Hotline at 1-888-327-4236 (TTY: 1-800-424-9153) or go to http://www.safercar.gov. In Canada, if after contacting your dealer and/or Manufacturer Customer Service you have additional question with regards to this recall, you may contact Transport Canada – road Safety, 80 rue Noel, Gatineau, Quebec J8Z 0A1 or call 1-800-333-0510.

Sincerely,

Tracy Sauerbrey
Warranty/Recall Department

Enclosure

May 20, 2011

Recall 11V-223
TC2011-143

This notice is sent to you in accordance with the requirements of the National Traffic and Motor Vehicle Safety Act and the Canada Motor Vehicle Safety Act. Thomas Built has decided that a defect which relates to motor vehicle safety exists on certain Saf-T-Liner C2, HDX, MVP-EF, FS-65, and Minotour model non school buses manufactured between January 2, 2006 and January 31, 2011. These units are identified on the enclosed postcard (Form PSD 304).

The defect involves the Carrier EM-1units. These may have a fuse holder defect, in which, due to time and temperature, the fuse holder may relax. Through relaxation of fuse holder contacts over time, a high-resistance connection may result, possibly producing arching. The arching may produce melting of the fuse holder or ignition of the fuse holder, which may cause flame or smoke to propagate within the EM-1 unit.

You should immediately contact your Thomas Built Buses dealer for an appointment to have your vehicle modified. Thomas will remedy this defect without charge. The remedy will consist of inspection to determine if the unit requires the rework. If it is determined the unit needs rework a retrofit kit composed of a new fuse holder configuration, inclusive of a fuse, connectors and complete installation instructions will be provided. It will take approximately .1 for inspection and .5 hour per unit for this repair. **To arrange for repairs, contact your local Thomas Built Buses dealer. After the repair is made, please complete each postage paid card separately and return it to Thomas Built Buses to verify completion.**

The postcard must be filled out and returned:

Once the vehicle has been completed
Once it has been determined that the vehicle does not need repair
If you no longer own the vehicle
If the vehicle identified on the postcard has been exported, stolen, or destroyed/totaled

Federal law requires that any vehicle lessor receiving the recall notice must forward a copy of this notice to the lessee within 10 days.

If you have had your vehicle repaired due to this defect prior to receipt of this notice and you have incurred any costs, you may be eligible for reimbursement. For further information, please contact the Warranty Department at (336) 889-4871, 8 a.m. to 5 p.m. eastern standard time Monday through Friday. To find a dealer in your area please go to www.thomasbus.com.

If the defect is not remedied without charge and within a reasonable time which is not longer than 60 days after you tender the vehicle for repair, also please contact the Warranty Department at (336)889-4871, 8:00 a.m. to 5:00 p.m. Eastern Time, Monday through Friday. If you believe that Thomas Built Buses has failed or is unable to remedy the defect without charge longer than 60 days, you may submit a complaint to the Administrator, National Highway Traffic Safety Administration, 1200 New Jersey Avenue, S.E., Washington, DC 20590, or phone the Vehicle Safety Hotline at 1-888-327-4236 (TTY: 1-800-424-9153) or go to http://www.safercar.gov. In Canada, if after contacting your dealer and/or Manufacturer Customer Service you have additional question with regards to this recall, you may contact Transport Canada – road Safety, 80 rue Noel, Gatineau, Quebec J8Z 0A1 or call 1-800-333-0510.

Sincerely,

Tracy Sauerbrey
Warranty/Recall Department

Enclosure

Service Information

TAC-SER11-001
01-31-11

Subject: EM1 Gen V Evaporator Units

The EM1 GenV blower motor fuse assembly could fail in an unsafe manner, creating a potential fire hazard. We are advising that any units manufactured between January 1, 2006 and December 2010 must have the evaporator motor in-line fuse assembly upgraded with the retrofit kit 74-62056-00. The only units affected are EM1 GenV evaporator modules, part numbers 77-62512-XX and 77-62112-XX, with serial numbers between KNT90890232 and NNE91230058. Customers with EM1 GenV units prior to the above mentioned serial numbers and dates that have had Carrier replacement motors 54-00621-00 installed, will also require this upgrade.

Below are instructions on how to identify and confirm the affected units by the unit identification tag, and visual confirmation of the fuse assembly.

CAUTION: Disconnect the vehicle battery and use proper lockout/tagout procedures for your safety.

1) Remove the cover from the evaporator by removing the 8 screws shown below. Properly support the cover while removing the screws.

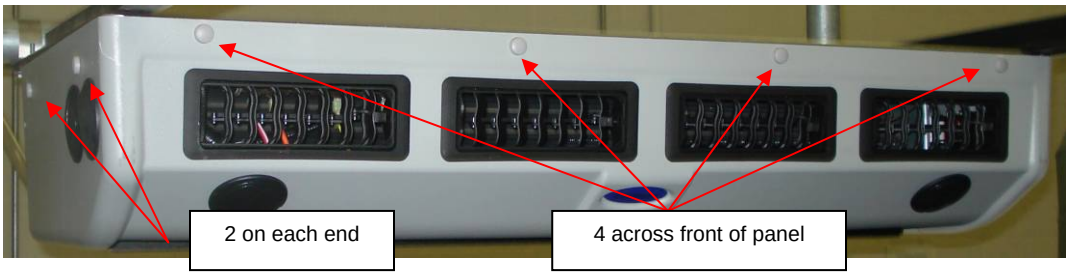

2) Once the cover has been removed, the identification tag containing the unit part number, manufacture date, and serial number can be found on the motor “cradle” mount, as seen in the photo below (on left). Compare the information to the above mentioned manufacture date, and/or serial number. Units employing a fuse holder as appears circled in red below require the upgrade with the new fuse holder.

Serial Number Tag

Old Fuse Holder

New Fuse Holder

3) Once it has been identified that the unit requires the fuse assembly upgrade, the serial number of the unit should be recorded for each affected unit.

4) Carrier has set up a dedicated Hotline to obtain the Retrofit kit required to perform the upgrade. The serial number of each unit **will be required when kits are ordered**. The kit(s) will be shipped to the address provided at no charge. Materials and instructions to perform work will be provided with the kit.

5) The time allowance to perform this re-work is ½ hr. To submit for labor reimbursement, a warranty claim needs to be filed with Carrier. The process and codes to be used are as follows.

    1. In the “Part number” category, enter”PT11-01” (no MPR required).
    2. Under “Job Code” enter “PT11-01 L” (this is for 0.50 hours labor).
    3. Submit claim

Availability of the retrofit kits is expected to be on or about the week of 3/15/2011. After this date, please contact Carrier Recall Hotline at (800) 793-4741 or an authorized Carrier Dealer/Service Center so that your unit can be retrofitted.

Robert Picker

Service/Warranty Manager
Carrier Transicold Division

BD, BU

Carrier A United Technologies Company Carrier Transicold Division P.O. Box 4805 Syracuse, New York 13221 USA	Drawing No. 98-63213	Rev. A
	Date JAN 17, 2011	Sheet 1 of 5
Title: RETRO-FIT KIT INSTRUCTIONS EM1 GENV IN-LINE FUSE	Supersedes	RETROFIT KIT: 74-62056-00

Purpose:

74-62056-00 Retrofit

kit is intended to replace inline fuses to EM1 evaporators built and shipped after Jan 1, 2006. Current inline fuse is removed and replaced with a more robust design as seen below.

BEFORE

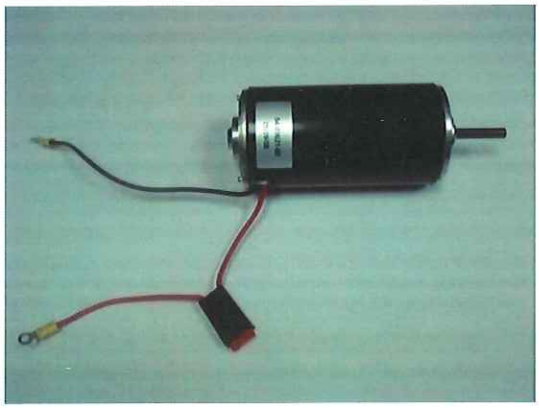

AFTER

Kit Contents:

Item	Part Description	QTY
1	Fuse Holder Assembly (22-62326-00)	1
2	Wire Ties (58-00079-02)	2

Tools Required:

Item	Tool Description
1	Phillips and Standard Screwdriver
2	Diagonal Cutters
3	Wire Strippers
4	Wire Crimpers (Insulated Terminals)
5	Heat Gun

File: This file is located on the Syracuse Server L:\Drafting\Forms\DwgForm.doc	Prepared By:	Approved By:	Date:

Carrier A United Technologies Company Carrier Transicold Division P.O. Box 4805 Syracuse, New York 13221 USA	Drawing No. 98-63213	Rev. A
	Date JAN 17, 2011	Sheet 2 of 5
Title: RETRO-FIT KIT INSTRUCTIONS EM1 GENV IN-LINE FUSE	Supersedes	RETROFIT KIT: 74-62056-00

General Safety Notices:

The following general safety notices supplement specific warnings and cautions appearing elsewhere in this document. They are recommended precautions and must be understood and applied during maintenance/service activities contained herein.

Qualified technician is required for successful installation of this kit. This document does not replace proper technical or safety precautionary training. Refer to Carrier Installation and Service Manuals for more information on safety notices and proper service techniques.

Prior to starting work each day, or starting any new job or task, it is expected that employees will inspect the job for potential hazards. Work must not start until all unsafe conditions are mitigated.

First Aid:
An injury, no matter how slight should never go unattended. Always obtain first aid or medical attention immediately.

Special Precautions:

Always wear appropriate personal protective gear (safety glasses, hearing protections, gloves, safety lanyards).

Keep hands, clothing, and tools, clear of moving parts (engines, condenser and evaporator fans).

No work should be completed unless battery power has been disconnected. Lockout/Tagout procedures should be in place and followed.

Carrier A United Technologies Company Carrier Transicold Division P.O. Box 4805 Syracuse, New York 13221 USA	Drawing No. 98-63213	Rev. A
	Date JAN 17, 2011	Sheet 3 of 5
Title: RETRO-FIT KIT INSTRUCTIONS EM1 GENV IN-LINE FUSE	Supersedes	RETROFIT KIT: 74-62056-00

Step By Step Instructions:

1. Disconnect vehicle battery.
2. Using a standard and phillips screwdriver, properly support and remove the 8 screws securing unit cover to gain access to motor assembly.

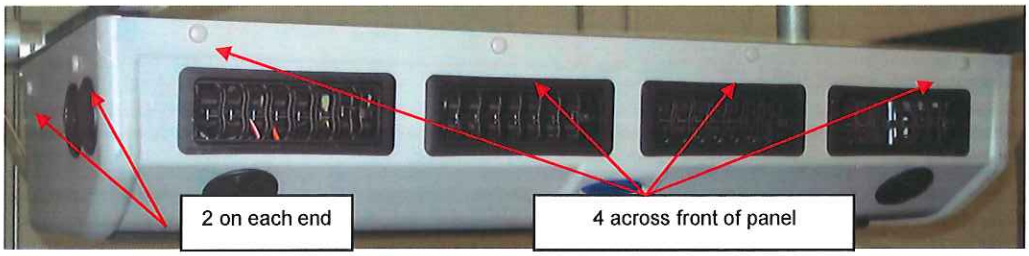

Remove plastic caps to access screws

3. A.) Cut the "red" lead on the motor side of fuse holder. Keep as close to fuse holder as possible. B.) Remove the fused motor lead ring terminal (red wire), from terminal block (Terminal #5 from right). Remove and discard old fuse and holder.

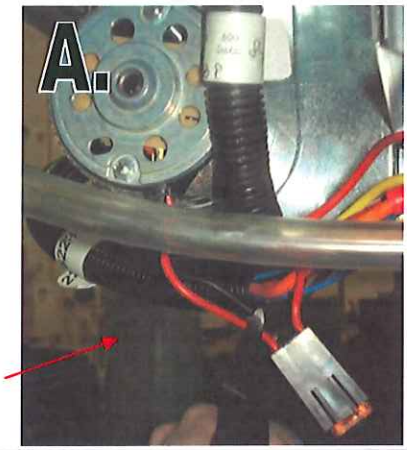

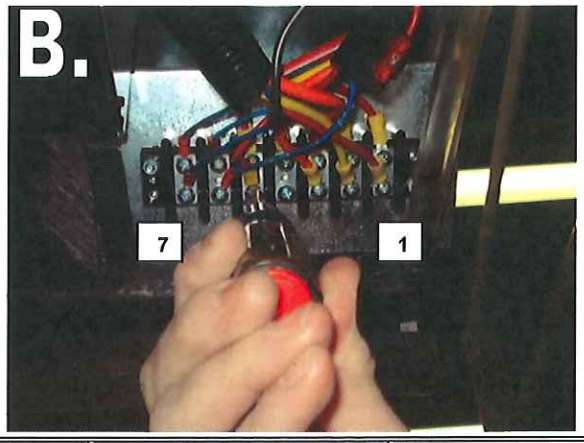

File: This file is located on the Syracuse Server L:\Drafting\Forms\DwgForm.doc	Prepared By:	Approved By:	Date:

Carrier A United Technologies Company Carrier Transicold Division P.O. Box 4805 Syracuse, New York 13221 USA	Drawing No. 98-63213	Rev. A
	Date JAN 17, 2011	Sheet 4 of 5
Title: RETRO-FIT KIT INSTRUCTIONS EM1 GENV IN-LINE FUSE	Supersedes	RETROFIT KIT: 74-62056-00

4. Strip the "red" lead to motor ¼" back to accept the butt splice terminal of the supplied fuse holder assembly.

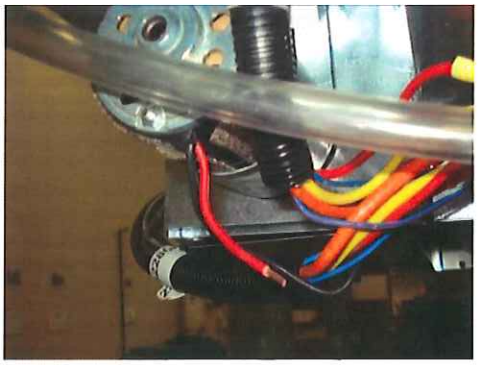

5. A.)Install ring terminal end of new fuse assembly 22-62326-00 onto original (position 5) of terminal block.
   B.)Install "butt" connector end of new fuse assembly 22-62326-00 to red motor lead, strip and prepared earlier.

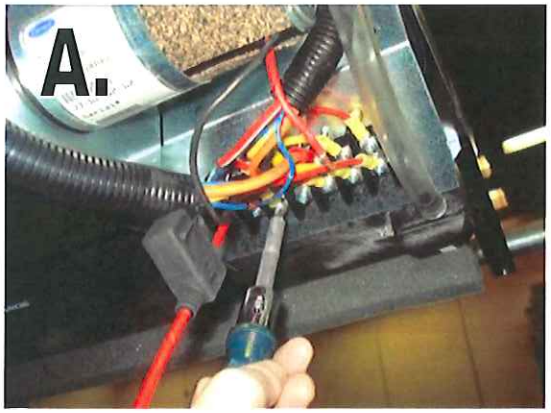

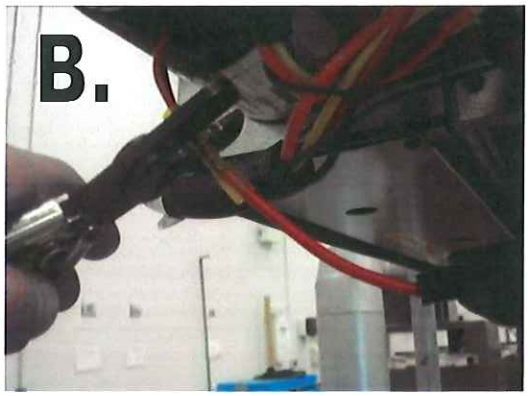

6. Properly heat shrink "butt" connector end of new fuse assembly 22-62326-00 at both ends.

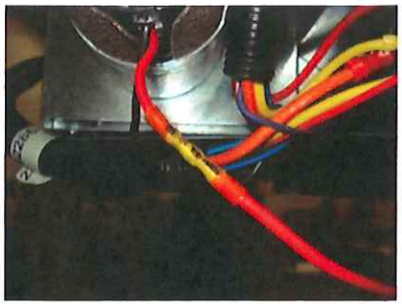

Carrier A United Technologies Company Carrier Transicold Division P.O. Box 4805 Syracuse, New York 13221 USA	Drawing No. 98-63213	Rev. A
	Date JAN 17, 2011	Sheet 5 of 5
Title: RETRO-FIT KIT INSTRUCTIONS EM1 GENV IN-LINE FUSE	Supersedes	RETROFIT KIT: 74-62056-00

7. Secure wiring and fuse holder from chafing, making sure NOT to attach fuse holder to, or in contact with any drain lines, wire loom, or the motor.

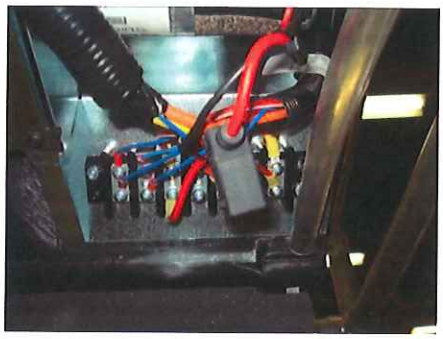

8. Properly support and re-install cover with all hardware.

SAFETY: Take all necessary precautions to properly secure unit cover.

IMPORTANT: Please contact Carrier Transport Technical Service Hot-Line at (800) 450-2211 with any questions or concerns.

SYM	REVISION RECORD	DATE	BY	ENG	ECN
A	INITIAL RELEASE	1/17/11	DNK	HEARN	68N0421P11

File: This file is located on the Syracuse Server L:\Drafting\Forms\DwgForm.doc	Prepared By:	Approved By:	Date:

Table of Contents

Product Recall

To: ALL DEALERS

From: TRACY SAUERBREY – WARRANTY/RECALL DEPARTMENT

Subject: RECALL 11V-503/ TC2011-369 Battery Cable Pass-Thru Corrosion

Date: December 9, 2011

Enclosed are copies of the customer notification letter and the repair procedure for Recall 11V-503. This recall involves certain Saf-T-Liner C2 model school buses manufactured between April 5, 2004 and December 26, 2005. The defect involves the pass-through power cable connections. Under certain environmental conditions the pass-through cable connections located behind the driver's side kick panel may corrode potentially resulting in an electric fault or short circuit. An electric fault or short circuit of an un-fused power cable may result in a vehicle fire.

This is a universal notification sent to all dealers. You may or may not have customers in your area affected by this recall. If owners in your area are subject to this recall, we have enclosed a printout listing those customers' names and addresses. If there is not a printout enclosed according to our records there are no units in your area involved**. If you have a printout and any of the units on it are still in your possession it is your responsibility to ensure the recall is performed before the unit is delivered to the customer.**

The remedy will consist of inspecting and cleaning and adding protection to power cables, it will take approximately .7 hour per unit for this repair. After inspection, if needed the body and/or chassis cables may have to be replaced. (SRT 90-120= .7 inspection/clean/add protection, SRT 90-121= .2 replacement of body cables or pass thru studs, SRT 90-122 = .6 replacement of chassis cables). **PLEASE NOTE: PRE-APPROVAL IS REQUIRED FROM YOUR TBB DISTRICT SERVICE MANAGER BEFORE YOU PERFORM EITHER OF THE LAST TWO REPAIRS. PARTS: Please order your parts individually from your Parts Distribution Center**

Thomas Built Buses has elected to notify all customers directly. Your customers will be contacting you to schedule an appointment for repairs. Reimbursement for labor, (if requested) may be obtained by filing a warranty claim.

If you know of any customers who own or operate a Thomas bus in this recall, whose name and address is NOT listed or is INCORRECTLY listed on the enclosed printout, please promptly notify Thomas Built Buses of that additional information in writing. Thank you for your cooperation and assistance.

Tracy
Enclosures: Customer Letter Repair Procedure Printout (if applicable)

December 15, 2011

Recall 11V-503
TC2011-369

This notice is sent to you in accordance with the requirements of the National Traffic and Motor Vehicle Safety Act and also sent in accordance with the requirements of the Canada Motor Vehicles Safety Act. Thomas Built has decided that a defect which relates to motor vehicle safety exists on certain Saf-T-Liner C2 model school buses manufactured between April 5, 2004 and December 26, 2005. These units are identified on the enclosed postcard (Form PSD 304).

The defect involves the pass-through power cable connections. Under certain environmental condition the pass-through power cable connections located behind the driver's side kick panel may corrode potentially resulting in an electric fault or short circuit. An electric fault or short circuit of an un-fused power cable may result in a vehicle fire.

You should immediately contact your Thomas Built Buses dealer for an appointment to have your vehicle modified. Thomas will remedy this defect without charge. The remedy will consist of inspecting and cleaning and adding protection to power cables, it will take approximately .7 hour per unit for this repair. After inspection, if needed the body and/or chassis cables may be replaced. **To arrange for repairs, contact your local Thomas Built Buses dealer. After the repair is made, please complete each postage paid card separately and return it to Thomas Built Buses to verify completion.**

The postcard must be filled out and returned:

- **Once the vehicle has been completed**
- **Once it has been determined that the vehicle does not need repair**
- **If you no longer own the vehicle**
- **If the vehicle identified on the postcard has been exported, stolen, or destroyed/totaled**

Federal law requires that any vehicle lessor receiving the recall notice must forward a copy of this notice to the lessee within 10 days.

If you have had your vehicle repaired due to this defect prior to receipt of this notice and you have incurred any costs, you may be eligible for reimbursement. For further information, please contact the Warranty Department at (336) 889-4871, 8 a.m. to 5 p.m. eastern standard time Monday through Friday. To find a dealer in your area please go to www.thomasbus.com. Owners may be liable for any progressive damage that results from its failure to complete campaigns within a reasonable time after receiving notification.

If the defect is not remedied without charge and within a reasonable time which is not longer than 60 days after you tender the vehicle for repair, also please contact the Warranty Department at (336)889-4871, 8:00 a.m. to 5:00 p.m. Eastern Time, Monday through Friday. If you believe that Thomas Built Buses has failed or is unable to remedy the defect without charge longer than 60 days, you may submit a complaint to the Administrator, National Highway Traffic Safety Administration, 1200 New Jersey Avenue, S.E., Washington, DC 20590, or phone the Vehicle Safety Hotline at 1-888-327-4236 (TTY: 1-800-424-9153) or go to http://www.safercar.gov. In Canada, if after contacting your dealer and/or Manufacturer Customer Service you have additional question with regards to this recall, you may contact Transport Canada – road Safety, 80 rue Noel, Gatineau, Quebec J8Z 0A1 or call 1-800-333-0510.

Sincerely,

Tracy Sauerbrey
Warranty/Recall Department

Enclosure

REPAIR PROCEDURE

RECALL #11V-503, TC2011-369

MODEL: SAF-T-LINER C2

SUBJECT: BODY BATTERY CABLES PASS-THRU CORROSION

PAGE: 1 OF 4

IMPORTANT: READ ENTIRE PROCEDURE BEFORE BEGINNING.

This document is intended to provide general guidance for cleaning and / or replacing of components due to corrosion at the Body Battery Cables Pass-Thru. These cables supply power and ground to the body power distribution module located in the driver's left hand control cabinet. The pass-thru studs are located in the floor beneath the control cabinet. The main focus will be to remove a section of floor covering and clean, torque, and protect body battery cables and pass-thru studs inside and outside the cab. After cleaning, if any of these listed components have eroded beyond safe usage, the component should be replaced. Refer to the component list at the end of this document.

1. Make sure the ignition is in the "Off" position. Chock the tires and disconnect the batteries.

2. Remove the lower panel at the left-hand drivers control cabinet. Locate the body battery power cables and pass-thru studs. Confirm the location of the pass-thru studs beneath the floor under the vehicle. These are just behind the left front fender.

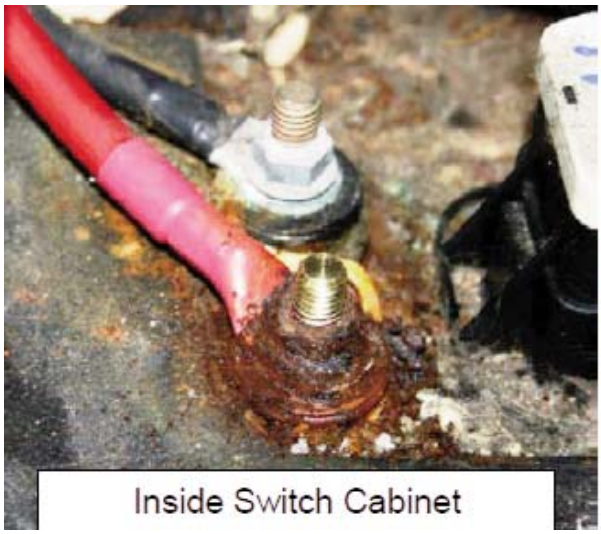

Inside Switch Cabinet

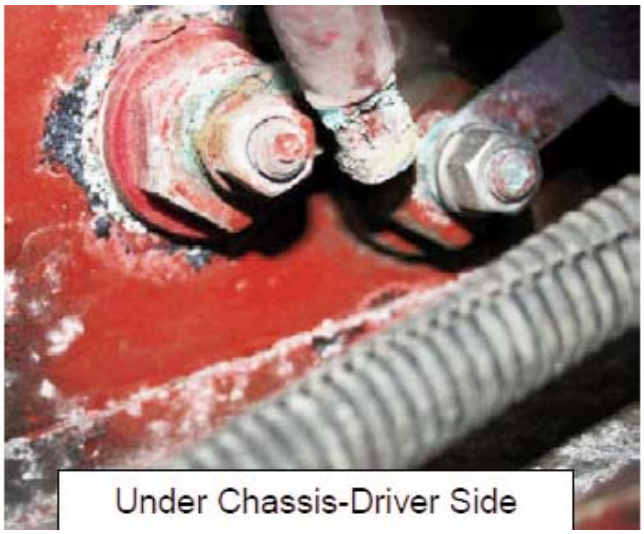

Under Chassis-Driver Side

3. A section of the floor covering will be removed. For units built prior to access panels, note the marks or left by the cabinet panel. Mark a cutting line ¾ of an inch to the inside of the cabinet. This will ensure the panel will overlap the floor covering when reinstalled.

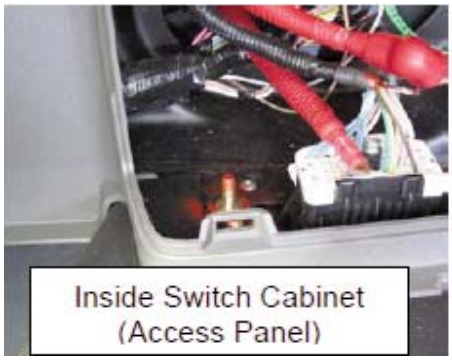
Inside Switch Cabinet (Access Panel)

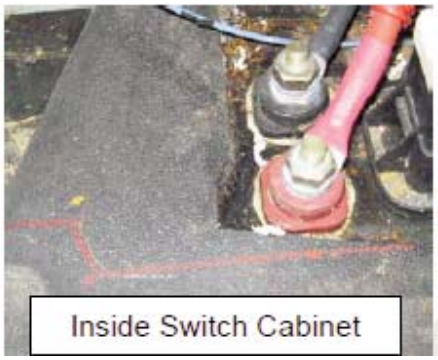
Inside Switch Cabinet

Inside Switch Cabinet

4. Cut along the inside of the cabinet bottom (access panel), or marked line down to the floor pan. Pull up and remove the floor covering that is located under the control cabinet. Clean out any debris (metal or plastic shavings, dirt, rocks, sand) that may be trapped around the pass-thru studs.

5. Remove the battery cables from the pass-thru studs above and below the floor. If the unit is built with horizontal mounted CHM / EXM, the modules can be removed from the mounting bracket to access the studs. Clean the loose scale, if present, from the cable terminal ends, hardware, and pass-thru studs top and bottom. Determine if these components can be cleaned and reused, or if they should be replaced due to corrosion erosion. See material list at the end of this procedure for component part numbers that need replaced.

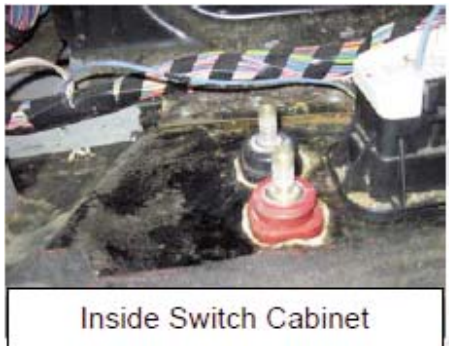
Inside Switch Cabinet

Under Chassis-Driver Side

Chassis w/ CHM Removed

6. Clean the cable terminal ends, hardware, and pass-thru studs top and bottom so that no corrosion is present. To gain better access to the pass-thru studs, the nylon mounting nuts below the floor can be removed so the studs can be cleaned while removed from the vehicle.

7. For reassembly, be sure all components are clean and dry.

8. If removed or replaced, reinstall the pass-thru studs and attach the body battery cables. Torque the nylon mounting nuts to 5.0 – 7.0 FT-LBS. Torque the brass terminal studs (top & bottom) to 7.4 – 8.85 FT-LBS.

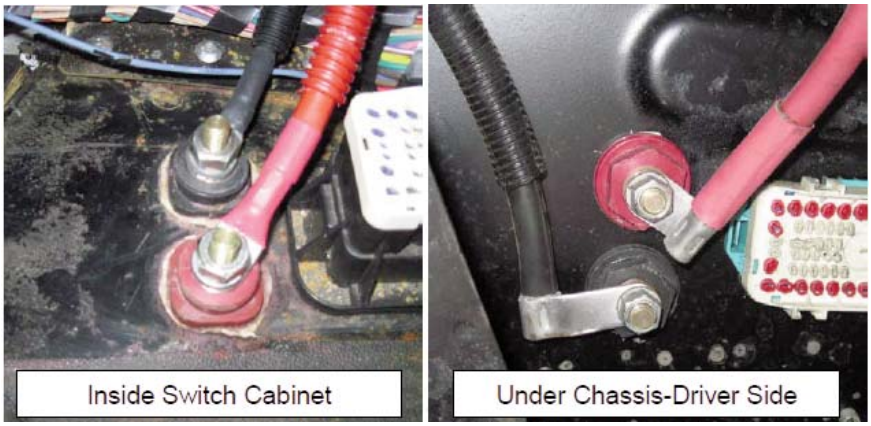

9. Apply a liberal amount of Red Varnish Dielectric Sealer to the exposed metal battery cable terminals, pass-thru studs, and hardware. Be sure to cover all the exposed metal completely.

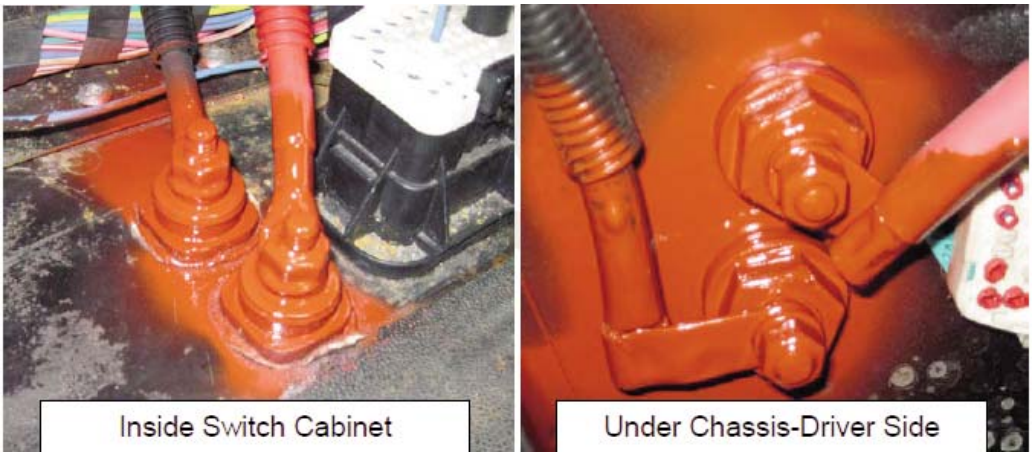

10. Reinstall the lower panel of the drivers control cabinet.

11. Connect the batteries and remove the tire chocks.

SRT Time Allowance	
INSPECT, CLEAN, ASSEMBLE AND ADD PROTECTION TO POWER CABLES	0.7 HRS.
REPLACEMENT OF BODY CABLES OR PASS-THRU STUDS (PRE-APPROVAL FROM TBB DISTRICT SERVICE MANAGER REQUIRED)	0.2 HRS.
REPLACEMENT OF CHASSIS CABLES (PRE-APPROVAL FROM TBB DISTRICT SERVICE MANAGER REQUIRED.)	0.6 HRS.

COMPONENT LIST:

TOTAL REPLACEMENT (MFJB INSIDE BATTERY BOX)	
PART NUMBER	DESCRIPTION
TBB 146992	CABLE, GROUND RETURN, JUNCTION TO PDM MAIN BODY
TBB 146993	CABLE, POWER SUPPLY, JUNCTION TO PDM MAIN BODY
A06-49120-107	POWER - CABLE, POSITIVE, 1GA, 5/16, 3/8 (MFJB INSIDE BATTERY BOX)
A06-49119-092	POWER - CABLE, NEGATIVE, 1GA, 3/8-3/8 FLAG (MFJB INSIDE BATTERY BOX)
A06-65736-082	POWER - CABLE, POSITIVE, 1GA, 5/16, 3/8, 82” (MFJB OUTSIDE BATTERY BOX)
A06-65737-056	POWER - CABLE, NEGATIVE, 1GA, 3/8-3/8 FLAG (MFJB OUTSIDE BATTERY BOX)
23-13718-003	STUD, PASS-THRU, ELEC, 3/8-16, RED
23-13770-000	NUT - MOUNT, 3/4-16UNF, NYLON, RED
23-13718-004	STUD, PASS-THRU, ELEC, 3/8-16, BLACK
23-13770-001	NUT - MOUNT, 3/4-16UNF, NYLON, BLACK
23-11677-002	NUT - HEX, SST, 3/8-16 UNC
23-09983-038	WASHER - LOCK, SST, 3/8”
TBB 171770	CONSUMABLES (RED INSULATING VARNISH, CLEANER, ABRASIVE, ETC.)
	MFJB = MEGA FUSE JUNCTION BOX

Table of Contents

Product Recall

To: ALL DEALERS

From: TRACY SAUERBREY – WARRANTY/RECALL DEPARTMENT

Subject: RECALL 11V-517 –SpectAL Push out Window Handle

Date: December 8, 2011

Enclosed are copies of the customer notification letter and the repair procedures for Recall 11V-517. This recall involves certain Minotour and EF model school buses manufactured between July 26, 2011 and August 9, 2011. The defect involves the emergency vertical push out windows. Incorrect rivets may have been used to attach the handles that an occupant would use to open the window in the event of an emergency. If the handle is actuated during a non-emergency situation and detaches, the emergency window cannot be resecured, posing a risk that children may fall or climb out.

This is a universal notification sent to all dealers. You may or may not have customers in your area affected by this recall. If owners in your area are subject to this recall, we have enclosed a printout listing those customers' names and addresses. If there is not a printout enclosed according to our records there are no units in your area involved**. If you have a printout and any of the units on it are still in your possession it is your responsibility to ensure the recall is performed before the unit is delivered to the customer.**

The remedy will consist of replacing the window stile containing the handle. It will take approximately .2 hour per window for this repair – (SRT 90-123). **Please contact SpectAL at 1-888-773-2825 to obtain your parts. NOTE: SpectAL has all parts packaged by body number; please have this information available when you call.**

Thomas Built Buses has elected to notify all customers directly. Your customers will be contacting you to schedule an appointment for repairs. Reimbursement for labor, (if requested) may be obtained by filing a warranty claim.

If you know of any customers who own or operate a Thomas bus in this recall, whose name and address is NOT listed or is INCORRECTLY listed on the enclosed printout, please promptly notify Thomas Built Buses of that additional information in writing. Thank you for your cooperation and assistance.

Tracy
Enclosures: Customer Letter Repair Procedure Printout (if applicable)

Table of Contents

December 15, 2011

Recall 11V-517

This notice is sent to you in accordance with the requirements of the National Traffic and Motor Vehicle Safety Act. Thomas Built has decided that a defect which relates to motor vehicle safety exists on certain Minotour and EF model school buses manufactured between July 26, 2011 and August 9, 2011. These units are identified on the enclosed postcard (Form PSD 304).

The defect involves the emergency vertical push out windows. Incorrect rivets may have been used to attach the handles that an occupant would use to open the window in the event of an emergency. If the handle is actuated during a non-emergency situation and detaches, the emergency window cannot be re-secured, posing a risk that children may fall or climb out.

You should immediately contact your Thomas Built Buses dealer for an appointment to have your vehicle modified. Thomas will remedy this defect without charge. The remedy will consist of replacing the window stile containing the handle. It will take approximately .2 hour per window for this repair. **To arrange for repairs, contact your local Thomas Built Buses dealer. After the repair is made, please complete each postage paid card separately and return it to Thomas Built Buses to verify completion.**

The postcard must be filled out and returned:

- **Once the vehicle has been completed**
- **Once it has been determined that the vehicle does not need repair**
- **If you no longer own the vehicle**
- **If the vehicle identified on the postcard has been exported, stolen, or destroyed/totaled**

Federal law requires that any vehicle lessor receiving the recall notice must forward a copy of this notice to the lessee within 10 days.

If you have had your vehicle repaired due to this defect prior to receipt of this notice and you have incurred any costs, you may be eligible for reimbursement. For further information, please contact the Warranty Department at (336) 889-4871, 8 a.m. to 5 p.m. eastern standard time Monday through Friday. To find a dealer in your area please go to www.thomasbus.com. Owners may be liable for any progressive damage that results from its failure to complete campaigns within a reasonable time after receiving notification.

If the defect is not remedied without charge and within a reasonable time which is not longer than 60 days after you tender the vehicle for repair, also please contact the Warranty Department at (336)889-4871, 8:00 a.m. to 5:00 p.m. Eastern Time, Monday through Friday. If you believe that Thomas Built Buses has failed or is unable to remedy the defect without charge longer than 60 days, you may submit a complaint to the Administrator, National Highway Traffic Safety Administration, 1200 New Jersey Avenue, S.E., Washington, DC 20590, or phone the Vehicle Safety Hotline at 1-888-327-4236 (TTY: 1-800-424-9153) or go to http://www.safercar.gov. In Canada, if after contacting your dealer and/or Manufacturer Customer Service you have additional question with regards to this recall, you may contact Transport Canada – road Safety, 80 rue Noel, Gatineau, Quebec J8Z 0A1 or call 1-800-333-0510.

Sincerely,

Tracy Sauerbrey
Warranty/Recall Department

Enclosure

Table of Contents

INDEPENDENT INSTRUCTION INSTRUCTION INDÉPENDANTE			
II	003	REV	E

Handle side member change on vertical P/O, installed
Changement du coté de poignée, fenêtre d'urgence verticale installée

WARNING / AVERTISSEMENT

Always follow all Federal, State, Local and Shop safety standards and use proper safety equipment when performing these procedures. Make sure to wear appropriate eye protection when using the tools to perform the repair. Bus must be parked on a level surface and wheels choked. This procedure requires working from ladders or scaffolds to reach the top of the window on outside during repair. Observe all safety precautions to secure the bus from rolling and for use of ladders or scaffolds.

Toujours respecter les lois et règles de sécurité et utiliser les équipements de sécurité requis pendant l'exécution de ces procédures. S'assurer de porter des lunettes de sécurité pour les yeux, lorsque les outils sont utilisés pour effectuer la réparation. L'autobus doit être stationné sur une surface au niveau et les roues bloquées. Ces procédures nécessitent des échelles ou échaffaudages pour atteindre la fenêtre du haut par l'extérieur. Observez toutes les mesures de précautions nécessaires pour empêcher le véhicule, ainsi que les échelles ou échaffaudages, de bouger.

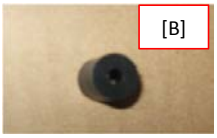

ENG

This kit should contain : Handle side member for replacement [A].

Optional items : Window stop [B] and screw [C] - depending on window's model - please refer to your vertical push-out currently installed on the bus.

FRA

Ce kit de réparation contient les éléments de remplacement suivants : Côté poignée fenêtre [A].

Items optionnels : Butée d'arrêt [B] et une vis [C] - selon le modèle de fenêtre - veuillez vous référer à la fenêtre présentement installée sur l'autobus et qui fera l'objet de remplacement.

RECOMMENDED TOOLS	OUTILS RECOMMANDÉS
1- Power drill	1- Perceuse
2- #2 square drill bit	2- Embout de tournevis carré #2
3- Phillips drill bit (stop installed with screw)	3- Embout de tournevis Phillips (butée de partie mobile installée avec vis)

If you have any questions or uncertain about how to perform this repair, please contact SpectAL (1-888-773-2825) or an authorized dealer.

Si vous avez des questions ou si vous êtes incertains de la façon dont il faut effectuer cette réparation, veuillez appeler au numéro suivant SpectAL (1-888-773-2825) ou tout autre concessionaire authorisé.

ENG

Select and open pushout window to replace part. Designate someone to hold top section (slider) of window firmly at all times while the handle side-member [D] of the window is being replaced.

FRA

Sélectionner et ouvrir la fenêtre d'urgence pour y remplacer le côté poignée de la fenêtre [D]. Désigner quelqu'un pour tenir la partie mobile tout au long du processus de changement de la pièce.

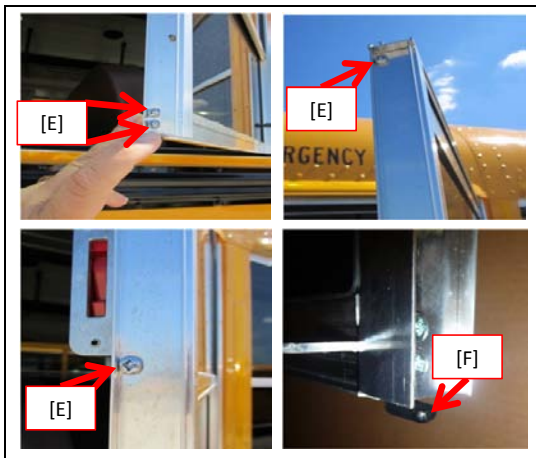	*ENG* *Make sure that top section (slider) of window is closed.* *Open pushout window. Using the #2 square bit & power drill, remove all four (4) screws [E] completely.* *Remove side member starting at the top. Remove spacer [F] at the bottom and set aside to reinstall later.* FRA Fermer la partie mobile de la fenêtre. Ouvrir la fenêtre d'urgence. À l'aide d'une perceuse et d'un embout de tournevis carré #2, retirer complètement les quatre (4) vis [E]. Enlever le coté à partir du haut. Enlever l'espaceur du bas [F], et conserver pour la réinstallation en étape subséquente.
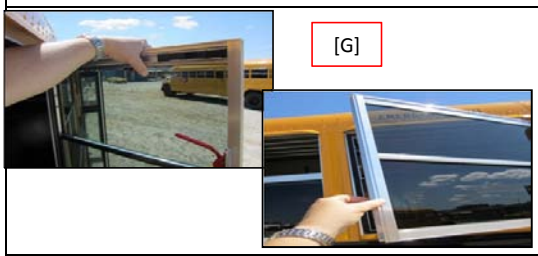	*ENG* ***CAUTION:*** *Be sure that top sliding section [G] of window is being held in place and will not fall. Replace with new side member.* FRA **ATTENTION**: Assurez-vous que la partie mobile coulissante [G] soit bien maintenue en place pour ne pas qu'elle tombe. Remplacez le par le nouveau coté.
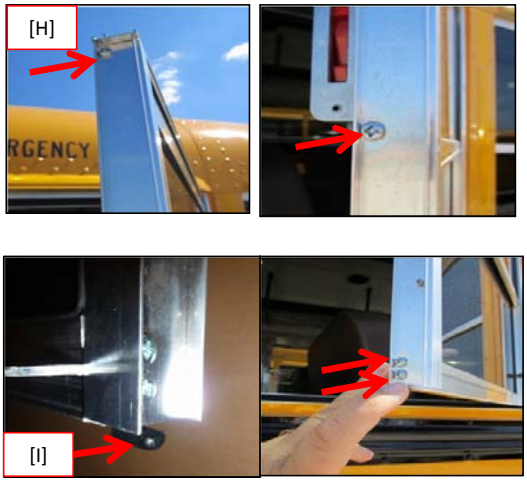	*ENG* *Line-up side-member properly and replace the four screws to secure window frame. Re-install new side-member, inserting the top first [H]. Reinstall spacer correctly [I], making sure that it is inserted all the way in the vertical side member of the window. Using the #2 square bit & power drill, reinstall the four (4) screws, with a torque of 50-54 lb-in. Make sure that no gasket is pinched.* FRA Aligner le coté avec les verres en l'enfonçant bien sur les verres. Ré-installer le bon côté, en insérant au niveau du dessus en premier [H]. Repositionner l'espaceur [I] et insérer complètement au fond du côté de fenêtre vertical. À l'aide d'une perceuse et d'un embout de tournevis carré #2, revisser les quatres (4) vis, avec un couple de serrage de 50-54 livres-pouce. S'assurer que les joints d'étanchéité ne sont pas coincés.
	ENG *If applicable, select the right hole for the window stop position (refer to the part that has just been disassembled). Install the window stop with the screw [J] from the interior of the channel. Use the powerdrill & the philips drill bit.* FRA Si applicable, sélectionner la position de la butée de partie mobile (en vous fiant au coté préalablement retiré). Installez la butée de partie mobile en insérant la vis [J] de l'intérieur du profilé de la fenêtre. Utiliser le perceuse ainsi que l'embout de type philips.
	ENG *Verify that both 'Red Latch-Handle' [K] and top section of sliding window [L] work and engage properly.* FRA Vérifier le bon fonctionnement de la poignée rouge [K] et des loquets du verre coulissant [L].

Authorized Field Change

AFC 11916

Date: September, 2011

Subject File: ENGINE

Subject: Turbo Air Inlet Boot Replacement

Model: 1300 FBC
Start Date: 04/12/2011 End Date: 05/26/2011

Model: 4300 4X2
Start Date: 03/18/2011 End Date: 06/21/2011

Model: 4300M 4X2
Start Date: 04/06/2011 End Date: 06/17/2011

Model: 4300M 4X4
Start Date: 04/07/2011 End Date: 05/31/2011

Model: 4400 4X2
Start Date: 03/21/2011 End Date: 06/20/2011

Model: 4400 6X4
Start Date: 03/18/2011 End Date: 06/22/2011

Model: 7300 4X2
Start Date: 03/23/2011 End Date: 06/15/2011

Model: 7300 4X4
Start Date: 03/31/2011 End Date: 06/14/2011

Model: 7400 4X2
Start Date: 03/22/2011 End Date: 06/21/2011

Model: 7400 4X4
Start Date: 03/30/2011 End Date: 06/21/2011

Model: 7400 6X4
Start Date: 03/17/2011 End Date: 06/22/2011

Model: 7400 6X6
Start Date: 04/01/2011 End Date: 06/20/2011

Model: 7500 4X2
Start Date: 03/28/2011 End Date: 06/21/2011

Model: 7500 4X4
Start Date: 03/24/2011 End Date: 05/31/2011

Model: 7500 6X4
Start Date: 03/24/2011 End Date: 06/21/2011

Model: 7500 6X6
Start Date: 03/31/2011 End Date: 06/20/2011

Model: BE S Bus
Start Date: 04/18/2011 End Date: 06/14/2011

Copyright© 2011 Navistar, Inc. All rights reserved. All marks are trademarks of their respective owners.

Model: CE C Bus
Start Date: 04/12/2011 End Date: 05/23/2011

Model: CE S Bus
Start Date: 03/29/2011 End Date: 06/20/2011

Model: HC C Bus
Start Date: 03/29/2011 End Date: 05/26/2011

Model: RE C Bus
Start Date: 05/18/2011 End Date: 06/08/2011

Model: RE S Bus
Start Date: 04/05/2011 End Date: 06/23/2011

Model: TerraStar® 4X2
Start Date: 03/28/2011 End Date: 06/29/2011

Engine Family: EPA 2010 MaxxForce® 7

Engine Family: EPA 2010 MaxxForce®DT / 9 / 10

DESCRIPTION

The turbo air inlet boot may fail at the turbo compressor connection on certain MaxxForce 7 (V8) and MaxxForce DT, 9, and 10 (I6) engines. This AFC instructs the user to replace the turbo inlet boot for all affected engines in field.

NOTE – To properly perform this repair, dealers are encouraged to purchase crimping pliers - Lisle Tool #30800. This tool is available through Service Parts under: ILIS30800 (ISN Tool Program).

PARTS INFORMATION

Table 1 Parts Information

Part Number	Description	Quantity
1889150C91	Air inlet duct (I6)	1
1889602C91	Air inlet duct (V8)	1
1840728C1	Clamp, hose (I6 / V8)	1

PROCEDURE

WARNING – To prevent vehicle damage, personal injury or death, park the vehicle on a flat, level surface. Make sure the engine ignition is in the off position, and the transmission is in the neutral or park position, if the vehicle is equipped with an automatic transmission. Set the parking brake, block the wheels to prevent the vehicle from moving in both directions, and disconnect the batteries at the negative terminal before doing any service procedures on the vehicle.

WARNING – To prevent personal injury or death, remove ground cable from negative terminal of main battery before disconnecting electrical components. Always connect ground cable last.

WARNING – To prevent personal injury or death, make sure that the engine has cooled before removing components.

WARNING – To prevent personal injury or death, always wear safe eye protection when performing vehicle maintenance.

WARNING – To prevent personal injury or death, do not let engine fluids stay on your skin. Clean skin and nails using hand cleaner and wash with soap and water. Wash or discard clothing and rags contaminated with engine fluids.

PROCEDURE (CONT.)

MAXXFORCE® DT, 9, AND 10 ENGINE TURBOCHARGER INLET BOOT REPLACEMENT INSTRUCTIONS

1. Remove inner fender.

2. Remove air compressor air supply hose (If applicable) (See Figure 1, page 4).

Figure 1 Air compressor air supply hose

3. Remove air filter restriction tube (If applicable) (See Figure 2, page 4).

Figure 2 Air filter restriction tube

MAXXFORCE® DT, 9, AND 10 ENGINE TURBOCHARGER INLET BOOT REPLACEMENT INSTRUCTIONS (CONT.)

4. Disconnect the MAF sensor connector.

5. Loosen clamp at the air duct to the air filter housing (See Figure 3, page 5).

Figure 3 Clamp on air duct

6. Remove the air filter housing retaining nut (See Figure 4, page 5).

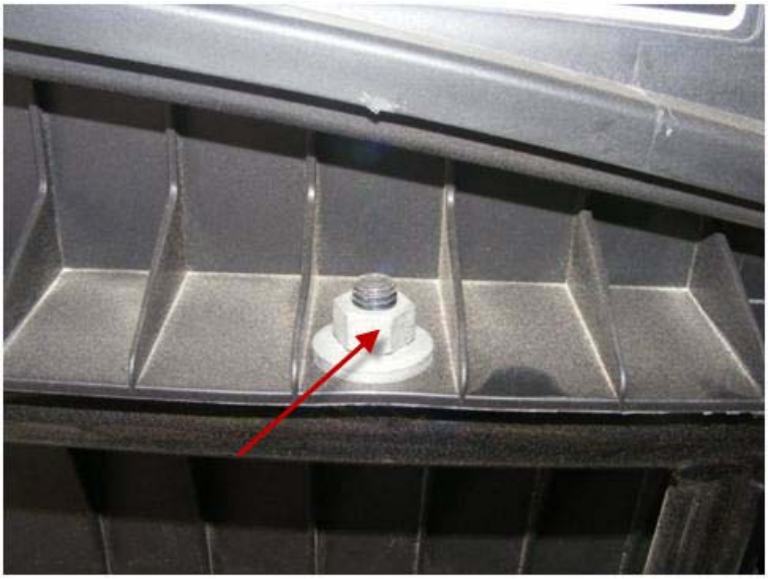

Figure 4 Air filter housing retaining nut

7. Remove air filter housing.

MAXXFORCE® DT, 9, AND 10 ENGINE TURBOCHARGER INLET BOOT REPLACEMENT INSTRUCTIONS (CONT.)

8. Loosen the clamp at the air duct to the turbocharger inlet boot (See Figure 5, page 6).

Figure 5 Air duct clamp

9. Remove the air duct.

10. Disconnect the Wastegate vent tube (See Figure 6, page 6).

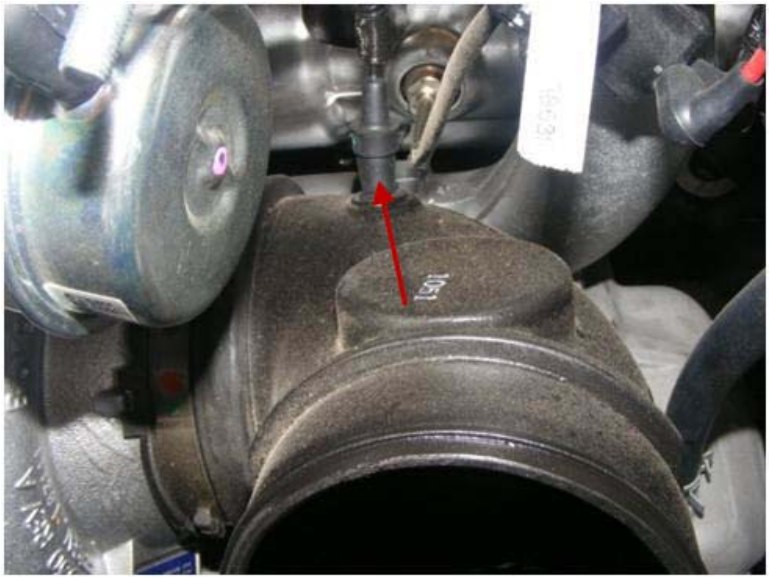

Figure 6 Wastegate vent tube

11. Loosen clamp at turbocharger inlet (See Figure 7, page 7).

MAXXFORCE® DT, 9, AND 10 ENGINE TURBOCHARGER INLET BOOT REPLACEMENT INSTRUCTIONS (CONT.)

Figure 7 Clamp on turbocharger inlet

12. Cut breather tube clamp and disconnect hose (See Figure 8, page 7).

Figure 8 Breather tube clamp

13. Remove turbocharger inlet boot.

14. Do a visual inspection of the turbocharger compressor wheel for damage.

    - If compressor wheel is not damaged, proceed to step 15.

MAXXFORCE® DT, 9, AND 10 ENGINE TURBOCHARGER INLET BOOT REPLACEMENT INSTRUCTIONS (CONT.)

- If compressor wheel is damaged, a Managed Repair case file must be submitted to Technical Service along with photos of the damaged compressor wheel.

    A. Start the Managed Repair case file by navigating to the Managed Repairs tab in ISIS for the VIN being inspected and click on the Launch Process button for AFC 11916 Supplement Turbo Compressor Wheel Damage Managed Repair (See Figure 9, page 8).

    B. Complete the Managed Repair form and attach 2 – 3 Digital Photos of the damaged wheel.

    C. After submitting the Managed Repair form, Technical Service will provide further inspection or repair instructions.

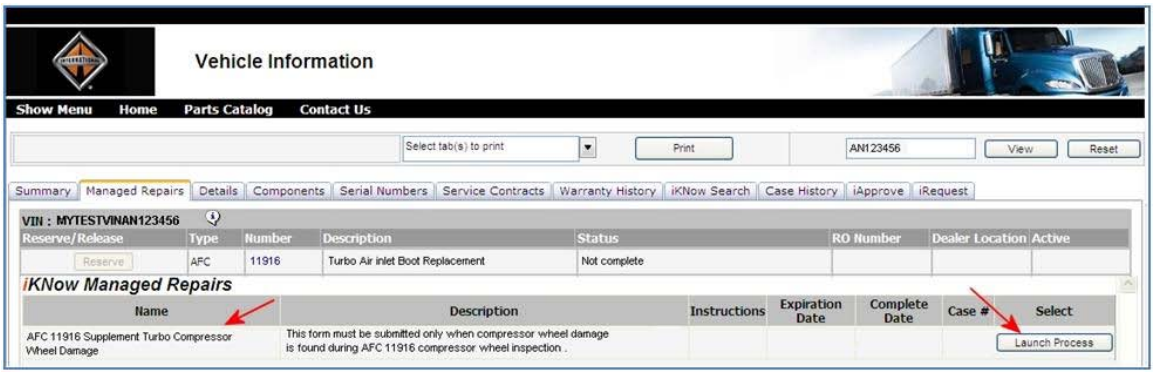

Figure 9 ISIS Managed repairs tab

15. Install the new turbocharger inlet boot; align the turbocharger notch in the center of the two air inlet duct alignment tabs (See Figure 10, page 8).

Figure 10 Turbocharger alignment notch

16. Torque clamp to 5 Nm / 48 lb-in.

MAXXFORCE® DT, 9, AND 10 ENGINE TURBOCHARGER INLET BOOT REPLACEMENT INSTRUCTIONS (CONT.)

17. Reconnect the Wastegate vent tube to the turbocharger inlet boot.

18. Connect breather tube and install a new pinch clamp.

19. Install air duct and air filter assembly: make sure the tab on the air filter housing aligns between the two tabs on the air duct (See Figure 11, page 9).

Figure 11 Air filter housing

20. Torque clamps to 5 Nm / 48 lb-in.

21. Install air filter retaining nut.

22. Reconnect MAF sensor.

23. Reconnect the air compressor air supply hose and the air filter minder tube.

24. Install inner fender.

25. Perform the MAF recalibration procedure with ServiceMaxx™. See the iKnow *2010 MAXXFORCE 7, DT, 9 and 10 MAF SENSOR CALIBRATION* (IK1200526) document at https://evalue.internationaldelivers.com/service_kb/iknow/iKNowDocTool/ArticleViewer.aspx?ControlID=4050.

MAXXFORCE™ 7 TURBOCHARGER INLET BOOT REPLACEMENT INSTRUCTIONS

1. Remove the inner fender splash shield.

2. Carefully disconnect the Wastegate vent tube from the turbocharger inlet boot.

3. Loosen the two clamps; remove the tube from the inlet boot and pull out of the way (See Figure 12, page 10).

Figure 12 Removing tube from inlet boot

4. Twist boot back to remove (See Figure 13, page 10).

Figure 13 Removing inlet boot

MAXXFORCE™ 7 TURBOCHARGER INLET BOOT REPLACEMENT INSTRUCTIONS (CONT.)

5. Do a visual inspection of the turbocharger compressor wheel for damage.

   - If compressor wheel is not damaged, proceed to step 6.
   - If compressor wheel is damaged, a Managed Repair case file must be submitted to Technical Service along with photos of the damaged compressor wheel.

     A. Start the Managed Repair case file by navigating to the Managed Repairs tab in ISIS for the VIN being inspected and click on the Launch Process button for AFC 11916 Supplement Turbo Compressor Wheel Damage Managed Repair (See Figure 9, page 8).

     B. Complete the Managed Repair form and attach 2 – 3 Digital Photos of the damaged wheel.

     C. After submitting the Managed Repair form, Technical Service will provide further inspection or repair instructions.

6. Install new boot; align the turbocharger notch in the center of the two air inlet duct alignment tabs (See Figure 14, page 11).

Figure 14 Turbocharger alignment notch

7. Torque clamps to 5 Nm / 48 lb-in.

8. Reconnect the Wastegate vent tube to the turbocharger inlet boot.

9. Perform the MAF recalibration procedure with ServiceMaxx™. See the iKnow *2010 MAXXFORCE 7, DT, 9 and 10 MAF SENSOR CALIBRATION* (IK1200526) document at https://evalue.internationaldelivers.com/service_kb/iknow/iKNowDocTool/ArticleViewer.aspx?ControlID=4050.

Operation number must appear on all claims.

Table 2 Labor Information

Operation No.	Description	Time
A40–11916-1	I–6 engine (MFDT / 9 / 10) turbo inlet boot replacement	0.7 hour
A40–11916-2	V-8 engine (MF7) turbo inlet boot replacement	0.6 hour
A40– 11916-3	Turbocharger inspection	0.1 hour

ADMINISTRATIVE PROCEDURE

Expense is to be charged to Warranty. Claims are to be submitted in the normal manner, making reference to Authorized Field Change Number G-11916.

It is important that the coding be completed properly to assist in processing the warranty claim. Complete instructions will be found in the Warranty Manual, Section 7–1. Special attention should be given to Items 39 through 44.

To assure this important improvement is made in a timely manner, all claims for G-11916 activity must be submitted by September 31, 2012 or within the normal warranty period for the vehicle, if after September 31, 2012.

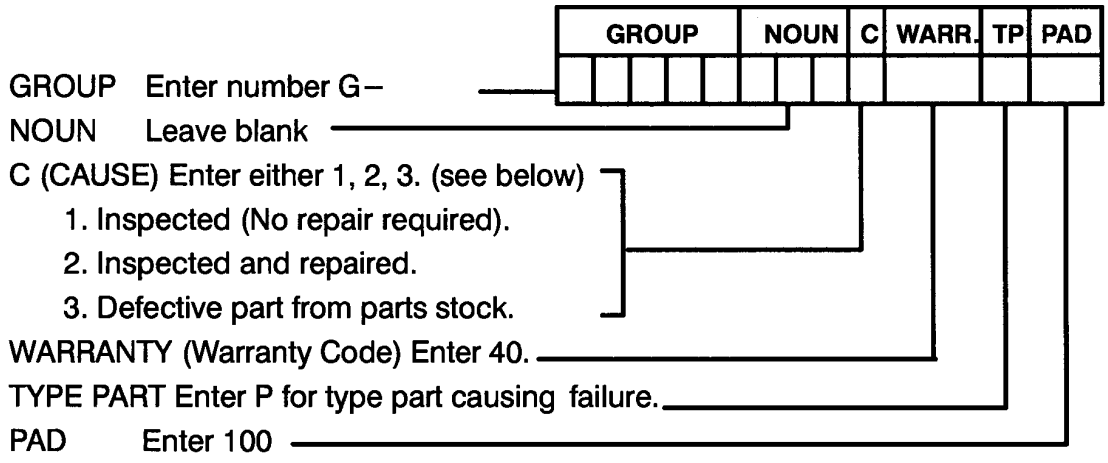

Distribution: All except J–81
Reproduction: Not required.

All marks are trademarks of their respective holders.

Authorized Field Change

NAVISTAR®

AFC 11926

Date: January, 2012

Subject File: ENGINE

Subject: CE Bus Intake Pipe Replacement

Model: CE C Bus
Start Date: 01/01/2010 End Date: 11/07/2011

Engine Family: MaxxForce® 7 (2010 Emissions)

DESCRIPTION

The fresh air intake pipe may contact the hood under certain conditions. If this condition is present, it can cause wear on the pipe which may result in a small hole being worn into the pipe. A hole in the pipe can result in dirt ingestion and premature engine wear. The repair will involve the installation of a new fresh air intake pipe.

PARTS INFORMATION

Table 1 Parts Information

Part Number	Description	Quantity
3941280C91	Air Intake Pipe Assembly	1

© 2012 Navistar, Inc. All rights reserved. All marks are trademarks of their respective owners.

PROCEDURE

WARNING – To prevent vehicle damage, personal injury or death, park the vehicle on a flat, level surface. Make sure the engine ignition is in the off position, and the transmission is in neutral or in the park position, if the vehicle is equipped with an automatic transmission. Set the parking brake, block the wheels to prevent the vehicle from moving in both directions, and disconnect the batteries at the negative terminal before doing any service procedures on the vehicle.

WARNING – To prevent personal injury or death, always wear safe eye protection when performing vehicle maintenance.

WARNING – To prevent personal injury or death, make sure that the engine has cooled before removing components.

WARNING – To prevent personal injury or death, do not let engine fluids stay on your skin. Clean skin and nails using hand cleaner and wash with soap and water. Wash or discard clothing and rags contaminated with engine fluids.

INTAKE PIPE REPLACEMENT PROCEDURE

1. Loosen the two clamps; remove the air intake tube from the inlet boot and pull out of the way (See Figure 1, page 3) and (See Figure 2, page 3).

INTAKE PIPE REPLACEMENT PROCEDURE (CONT.)

Figure 1 Removing tube from inlet boot

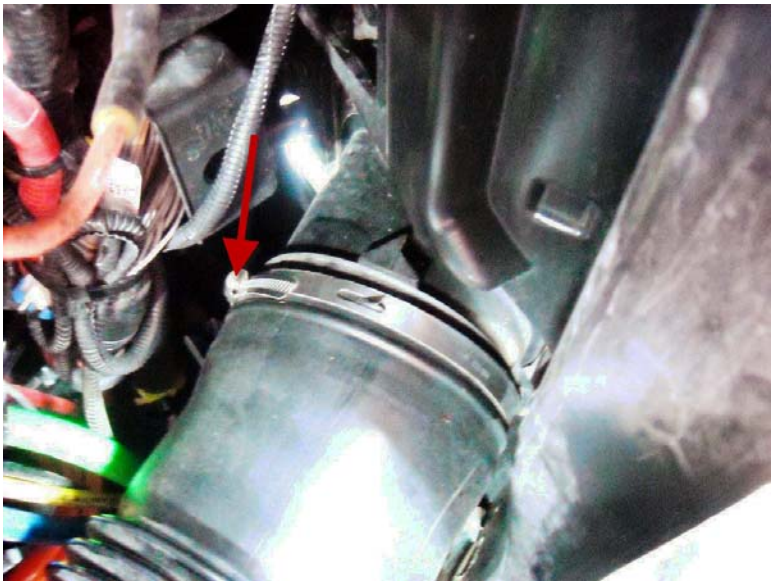

Figure 2 Air intake pipe clamp location

2. Remove the air intake pipe assembly.

3. Install the new air intake pipe assembly.

4. Align the turbocharger notch in the center of the two air inlet duct alignment tabs (See Figure 3, page 4).

INTAKE PIPE REPLACEMENT PROCEDURE (CONT.)

Figure 3 Turbocharger alignment notch

5. Torque the two clamps to 5 N•m (48 lb-in).

6. Perform the MAF recalibration procedure with ServiceMaxx™. See the following iKnow article 2010 MaxxForce® 7, DT, 9 and 10 MAF Sensor Calibration IK1200526.

Operation number must appear on all claims.

Table 2 Labor Information

Operation No.	Description	Time
A40-11926-2	Replace Air Intake Pipe Assembly	0.5 hours

ADMINISTRATIVE PROCEDURE

Expense is to be charged to Warranty. Claims are to be submitted in the normal manner, making reference to Authorized Field Change Number G-11926.

It is important that the coding be completed properly to assist in processing the warranty claim. Complete instructions will be found in the Warranty Manual, Section 7–1. Special attention should be given to Items 39 through 44.

To assure this important improvement is made in a timely manner, all claims for G-11926 activity must be submitted by January 31, 2013 or within the normal warranty period for the vehicle, if after January 31, 2013.

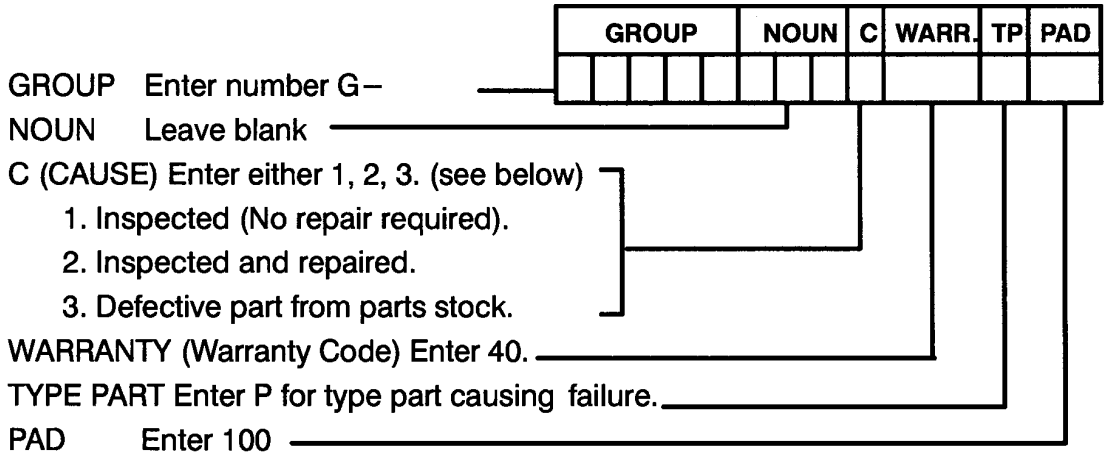

Distribution: All except J–81
Reproduction: Not required.

All marks are trademarks of their respective holders.

Daimler Trucks North America LLC

Recall Campaign

January 2012
FL619AB
NHTSA #11V-573 (School Buses)
NHTSA #11V-576 (Non-School Buses)
Transport Canada #11-417

Subject: FCCC Bus Chassis Grid Heater Relay Wiring

Models Affected: Specific Thomas Built Buses Saf-T-Liner C2 school buses built on Freightliner Custom Chassis B2 chassis and Freightliner Custom Chassis S2 shuttle bus chassis manufactured November 15, 2010, through September 29, 2011, with a certain grid heater mounting bracket.

General Information

Daimler Trucks North America LLC, on behalf of its wholly owned subsidiary, Freightliner Custom Chassis Corporation, has decided that a defect that relates to motor vehicle safety exists on the vehicles mentioned above.

There are approximately 5,700 vehicles involved in this campaign.

The grid heater relay ground wire may contact the relay power terminal and rub or chafe, resulting in a possible short circuit. An electric fault or short circuit could cause a vehicle fire.

The routing of the grid heater relay ground wire will be inspected and modified as needed to ensure adequate clearance from the power terminal.

Additional Repairs

Dealers must complete all outstanding recall and field service campaigns prior to the sale or delivery of a vehicle. A Dealer will be liable for any progressive damage that results from its failure to complete campaigns before sale or delivery of a vehicle.

Owners may be liable for any progressive damage that results from failure to complete campaigns within a reasonable time after receiving notification.

Work Instructions

Please refer to the attached work instructions. Prior to performing the campaign, check the vehicle for a completion sticker (Form WAR260).

Replacement Parts

Replacement parts are not needed for this Recall.

If our records show your dealership has ordered any vehicles involved in campaign number FL619AB, a list of the customers and vehicle identification numbers will be available on AccessFreightliner.com.

Removed Parts

Please follow Warranty Failed Parts Tracking shipping instructions for the disposition of all removed parts.

Labor Allowance

Table 1 - Labor Allowance

Campaign Number	Procedure	Time Allowed (hours)	SRT Code	Damage Code
FL619AB	Inspect grid heater relay ground wire routing	0.2	996-0868A	000-Inspected
	Inspect and reroute grid heater relay ground wire	0.4	996-0868B	000-Modifiedx

Table 1

Recall Campaign

Daimler Trucks
North America LLC

January 2012
FL619AB
NHTSA #11V-573 (School Buses)
NHTSA #11V-576 (Non-School Buses)
Transport Canada #11-417

IMPORTANT: When the recall has been completed, locate the base completion label in the appropriate location on the vehicle, and attach the red completion sticker provided in the recall kit (Form WAR260). If the vehicle does not have a base completion label, clean a spot on the appropriate location of the vehicle and first attach the base completion label (Form WAR259). If a recall kit is not required or there is no completion sticker in the kit, write the recall number on a blank sticker and attach it to the base completion label.

Claims for Credit

You will be reimbursed for your parts, labor, and handling by submitting your claim through the Warranty system within 30 days of completing this campaign. Please reference the following information in QuickClaim:

- Claim type is **Recall**.
- In the FTL Authorization field, enter the campaign number and appropriate condition code (**FL619A, FL619B**).
- In the Primary Failed Part Number field, enter **25-FL619-000**.
- No parts are needed for this Recall.
- In the Labor field, first enter the appropriate SRT from the Labor Allowance Table. For administrative time, enter SRT 939-0010A for 0.3 hours.
- For OWL, the VMRS Component Code is 032-003-013 and the Cause Code is A1- Campaign.
- **Reimbursement for Prior Repairs.** When a customer asks about reimbursement, please do the following.
    - Accept the documentation of the previous repair.
    - Make a brief check of the customer's paperwork to see if the repair may be eligible for reimbursement. (See the "Copy of Owner Letter" section of this bulletin for reimbursement guidelines for this recall.)
    - Submit a Campaign Pre-Approval inquiry to the Warranty Campaigns Department for a decision and authorization number.
    - Include the approved amount on your claim in sublet/outside purchases.
    - In the claim story, first note the authorization number and that the claim includes a reimbursement request.
    - Retain the documentation and provide it to Warranty Campaigns or Claims Processing if requested.
    - When your claim is paid, reimburse the customer the appropriate amount.

IMPORTANT: ServicePro must be viewed prior to performing the recall to ensure the vehicle is involved and the campaign has not been previously completed. Also, check for a completion sticker prior to beginning work.

Contact the Warranty Campaigns Department from 7:00 a.m. to 4:00 p.m. Pacific Time, Monday through Friday, via Web inquiry at AccessFreightliner.com / Support / My Tickets and Submit an Inquiry, or the Customer Assistance Center at (800) 385-4357, after normal business hours, if you have any questions or need additional information.

To return excess kit inventory related to this campaign, U.S. dealers must submit a Parts Authorization Return (PAR) to the Memphis PDC. Canadian dealers must submit a PAR to their facing PDC. All kits must be in resalable condition. PAR requests must include the original purchase invoice number.

The letter notifying vehicle owners is included for your reference.

Daimler Trucks North America LLC

Recall Campaign

January 2012
FL619AB
NHTSA #11V-573 (School Buses)
NHTSA #11V-576 (Non-School Buses)
Transport Canada #11-417

Please note that the National Traffic and Motor Vehicle Safety Act, as amended (Title 49, United States Code, Chapter 301), requires the owner's vehicle(s) be corrected within a reasonable time after parts are available to you. The Act states that failure to repair a vehicle within 60 days after tender for repair shall be prima facie evidence of an unreasonable time. However, circumstances of a particular situation may reduce the 60 day period. Failure to repair a vehicle within a reasonable time can result in either the obligation to (a) replace the vehicle with an identical or reasonably equivalent vehicle, without charge, or (b) refund the purchase price in full, less a reasonable allowance for depreciation. The Act further prohibits dealers from selling a vehicle unless all outstanding recalls are performed. Any lessor is required to send a copy of the recall notification to the lessee within 10 days. Any subsequent stage manufacturer is required to forward this notice to its distributors and retail outlets within five working days.

Recall Campaign

Daimler Trucks
North America LLC

January 2012
FL619AB
NHTSA #11V-573 (School Buses)
NHTSA #11V-576 (Non-School Buses)
Transport Canada #11-417

Copy of Notice to Owners

Subject: FCCC Bus Chassis Grid Heater Relay Wiring

For the Notice to U.S. Customers: This notice is sent to you in accordance with the requirements of the National Traffic and Motor Vehicle Safety Act.

For the Notice to Canadian Customers: This notice is sent to you in accordance with the Canadian Motor Vehicles Safety Act.

Daimler Trucks North America LLC, on behalf of its wholly owned subsidiary, Freightliner Custom Chassis Corporation, has decided that a defect which relates to motor vehicle safety exists on specific Thomas Built Buses Saf-T-Liner C2 school buses built on Freightliner Custom Chassis B2 chassis and Freightliner Custom Chassis S2 shuttle bus chassis manufactured November 15, 2010, through September 29, 2011, with a certain grid heater mounting bracket.

The grid heater relay ground wire may contact the relay power terminal and rub or chafe, resulting in a possible short circuit. An electric fault or short circuit could cause a vehicle fire.

The routing of the grid heater relay ground wire will be inspected and modified as needed to ensure adequate clearance from the power terminal.

Please contact an authorized Daimler Trucks North America dealer to arrange to have the recall performed and to ensure that parts are available at the dealership. To locate an authorized dealer, search online at www.Daimler-TrucksNorthAmerica.com. The Recall will take approximately half an hour to an hour and will be performed at no charge to you.

You may be liable for any progressive damage that results from your failure to complete the Recall within a reasonable time after receiving notification

If you do not own the vehicle that corresponds to the identification number(s) which appears on the Recall Notification, please return the notification to the Warranty Campaigns Department with any information you can furnish that will assist us in locating the present owner. If you have leased this vehicle, Federal law requires that you forward this notice to the lessee within 10 days. If you are a subsequent stage manufacturer, Federal law requires that you forward this notice to your distributors and retail outlets within five working days. If you have paid to have this recall condition corrected prior to this notice, you may be eligible to receive reimbursement. Please see the reverse side of this notice for details.

For the Notice to U.S. Customers: If you have questions about this Recall, please contact the Warranty Campaigns Department at (800) 547-0712, 7:00 a.m. to 4:00 p.m. Pacific Time Monday through Friday, e-mail address DTNA.Warranty.Campaigns@Daimler.com, or the Customer Assistance Center at (800) 385-4357 after normal business hours. If you are not able to have the defect remedied without charge and within a reasonable time, you may wish to submit a complaint to the Administrator, National Highway Traffic Safety Administration, 1200 New Jersey Avenue, SE., Washington, DC 20590; or call the Vehicle Safety Hotline at (888) 327-4236 (TTY: 800-424-9153); or to http://www.safercar.gov.

For the Notice to Canadian Customers: If you have questions about this Recall, please contact the Warranty Campaigns Department at (800) 547-0712, 7:00 a.m. to 4:00 p.m. Pacific Time Monday through Friday, e-mail address DTNA.Warranty.Campaigns@Daimler.com, or the Customer Assistance Center at (800) 385-4357 after normal business hours.

We regret any inconvenience this action may cause but feel certain you understand our interest in motor vehicle safety.

WARRANTY CAMPAIGNS DEPARTMENT

Enclosure

Daimler Trucks North America LLC

Recall Campaign

January 2012
FL619AB
NHTSA #11V-573 (School Buses)
NHTSA #11V-576 (Non-School Buses)
Transport Canada #11-417

Reimbursement to Customers for Repairs Performed Prior to Recall

If you have already **paid** to have this recall condition corrected you may be eligible to receive reimbursement.

Requests for reimbursement may include parts and labor. Reimbursement may be limited to the amount the repair would have cost if completed by an authorized Daimler Trucks North America LLC dealer. The following documentation must be presented to your dealer for consideration for reimbursement.

Please provide original or clear copies of all receipts, invoices, and repair orders that show:

- The name and address of the person who paid for the repair.
- The Vehicle Identification Number (VIN) of the vehicle that was repaired.
- What problem occurred, what repair was done, when the repair was done.
- Who repaired the vehicle.
- The total cost of the repair expense that is being claimed.
- Proof of payment for the repair (such as the front and back of a cancelled check or a credit card receipt).

Reimbursement will be made by check from your Daimler Trucks North America LLC dealer.

Please speak with your Daimler Trucks North America LLC authorized dealer concerning this matter.

Recall Campaign

Daimler Trucks
North America LLC

January 2012
FL619AB
NHTSA #11V-573 (School Buses)
NHTSA #11V-576 (Non-School Buses)
Transport Canada #11-417

Work Instructions

Subject: FCCC Bus Chassis Grid Heater Relay Wiring

Models Affected: Specific Thomas Built Buses Saf-T-Liner C2 school buses built on Freightliner Custom Chassis B2 chassis and Freightliner Custom Chassis S2 shuttle bus chassis manufactured November 15, 2010, through September 29, 2011, with a certain grid heater mounting bracket.

Inspection

1. Check the base label (Form WAR259) for a completion sticker for FL619 (Form WAR260) indicating this work has been done. The base label is usually located above the driver's window in buses. If a sticker for FL619 is present, no work is needed. If no sticker is present, continue with the next step.
2. Park the vehicle on a level surface, shut down the engine, and set the parking brake. Chock the tires.
3. Open the hood.
4. Inspect the wiring on the grid heater relay, located in the top-middle of the firewall. See **Fig. 1**.
   - 4.1 If the ground wire is touching the positive power cable, go to "Ground Wire Routing."
   - 4.2 If the ground wire is not touching the power cable, no further work is needed. Clean a spot on the base label (Form WAR259), write the Recall number, FL619, on a blank completion sticker (Form WAR260), and attach it to the base label.

Ground Wire Routing

1. Split the harness loom open so that the ground wire can be pulled out to the right, directly above the grid heater relay, as shown in **Fig. 2**.
2. Tape the harness loom to the left of where the ground wire comes out of the loom.

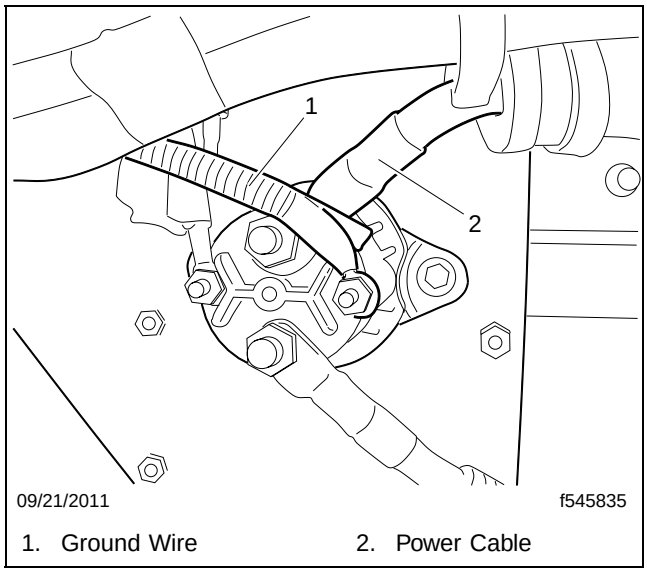

Fig. 1, Ground Wire Touches Power Cable

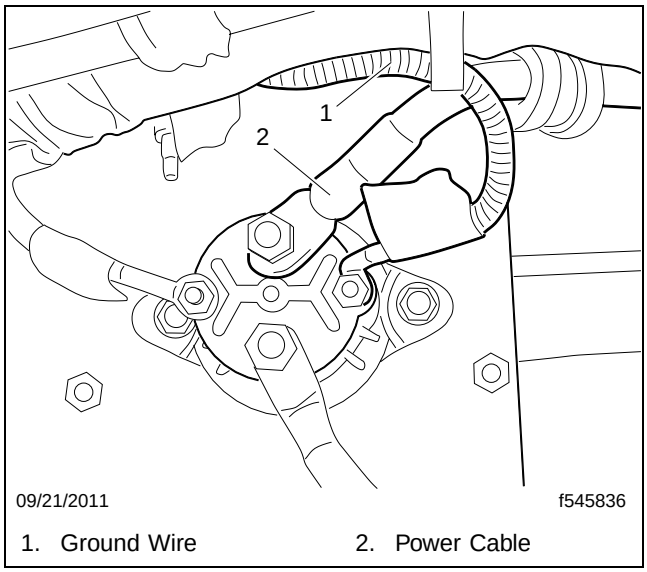

Fig. 2, Ground Wire Routed Above the Grid Heater

3. Route the ground wire as shown in **Fig. 2**.
4. Make certain the loom on the ground wire is still in place, and that the ground wire and the loom are not touching the positive power cable.
5. Lower the hood.
6. Clean a spot on the base label (Form WAR259), write the Recall number, FL619, on a blank completion sticker (Form WAR260), and attach it to the base label.

Daimler Trucks North America LLC

Recall Campaign

January 2012
FL620AB
NHTSA #11V-578 (School Buses)
NHTSA #12V-010 (Non-School Buses)
Transport Canada #11-418

Subject: FCCC Bus Chassis Side Marker/Directional Lights

Models Affected: Specific Thomas Built Buses Saf-T-Liner C2 school buses built on Freightliner Custom Chassis B2 chassis and Freightliner Custom Chassis S2 shuttle bus chassis manufactured January 5, 2011, through July 26, 2011.

General Information

Daimler Trucks North America LLC, on behalf of its wholly owned subsidiary, Freightliner Custom Chassis Corporation, has decided that a defect that relates to motor vehicle safety exists on the vehicles mentioned above.

There are approximately 3,000 vehicles involved in this campaign.

Inaccurate fault detection values in the bulkhead module software may cause the side marker/directional lights to stop functioning after a few minutes of vehicle operation. Lights will resume operation after the vehicle is shut down and restarted. Failure of the side marker/directional lights to illuminate will result in decreased visibility of the bus and/or intended direction of travel and may increase the possibility of a vehicle crash.

The bulkhead module software will be updated.

Additional Repairs

Dealers must complete all outstanding recall and field service campaigns prior to the sale or delivery of a vehicle. A Dealer will be liable for any progressive damage that results from its failure to complete campaigns before sale or delivery of a vehicle.

Owners may be liable for any progressive damage that results from failure to complete campaigns within a reasonable time after receiving notification.

Work Instructions

Please refer to the attached work instructions. Prior to performing the campaign, check the vehicle for a completion sticker (Form WAR260).

Replacement Parts

Replacement parts are not needed for this Recall.

If our records show your dealership has ordered any vehicles involved in campaign number FL620AB, a list of the customers and vehicle identification numbers will be available on AccessFreightliner.com. Please refer to this list when ordering parts for this recall.

Removed Parts

Please follow Warranty Failed Parts Tracking shipping instructions for the disposition of all removed parts.

Labor Allowance

Table 1 - Labor Allowance

Campaign Number	Procedure	Time Allowed (hours)	SRT Code	Damage Code
FL620AB	Update bulkhead module software	0.3	996-0869A	000-Modifiedx

Table 1

Recall Campaign

January 2012
FL620AB
NHTSA #11V-578 (School Buses)
NHTSA #12V-010 (Non-School Buses)
Transport Canada #11-418

IMPORTANT: When the recall has been completed, locate the base completion label in the appropriate location on the vehicle, and attach the red completion sticker provided in the recall kit (Form WAR260). If the vehicle does not have a base completion label, clean a spot on the appropriate location of the vehicle and first attach the base completion label (Form WAR259). If a recall kit is not required or there is no completion sticker in the kit, write the recall number on a blank sticker and attach it to the base completion label.

Claims for Credit

You will be reimbursed for your parts, labor, and handling by submitting your claim through the Warranty system within 30 days of completing this campaign. Please reference the following information in QuickClaim:

- Claim type is **Recall**.
- In the FTL Authorization field, enter the campaign number and appropriate condition code (**FL620A or FL620**).
- In the Primary Failed Part Number field, enter **25-FL620-000**.
- No parts are needed for this Recall.
- In the Labor field, first enter the appropriate SRT from the Labor Allowance Table. For administrative time, enter SRT 939-0010A for 0.3 hours.
- For OWL, the VMRS Component Code is 003-006-008 and the Cause Code is A1- Campaign.
- **Reimbursement for Prior Repairs.** When a customer asks about reimbursement, please do the following.
    - Accept the documentation of the previous repair.
    - Make a brief check of the customer's paperwork to see if the repair may be eligible for reimbursement. (See the "Copy of Owner Letter" section of this bulletin for reimbursement guidelines for this recall.)
    - Submit a Campaign Pre-Approval inquiry to the Warranty Campaigns Department for a decision and authorization number.
    - Include the approved amount on your claim in sublet/outside purchases.
    - In the claim story, first note the authorization number and that the claim includes a reimbursement request.
    - Retain the documentation and provide it to Warranty Campaigns or Claims Processing if requested.
    - When your claim is paid, reimburse the customer the appropriate amount.

IMPORTANT: ServicePro must be viewed prior to performing the recall to ensure the vehicle is involved and the campaign has not been previously completed. Also, check for a completion sticker prior to beginning work.

Contact the Warranty Campaigns Department from 7:00 a.m. to 4:00 p.m. Pacific Time, Monday through Friday, via Web inquiry at AccessFreightliner.com / Support / My Tickets and Submit an Inquiry, or the Customer Assistance Center at (800) 385-4357, after normal business hours, if you have any questions or need additional information.

To return excess kit inventory related to this campaign, U.S. dealers must submit a Parts Authorization Return (PAR) to the Memphis PDC. Canadian dealers must submit a PAR to their facing PDC. All kits must be in resalable condition. PAR requests must include the original purchase invoice number.

The letter notifying vehicle owners is included for your reference.

Please note that the National Traffic and Motor Vehicle Safety Act, as amended (Title 49, United States Code, Chapter 301), requires the owner's vehicle(s) be corrected within a reasonable time after parts are available to you. The Act states that failure to repair a vehicle within 60 days after tender for repair shall be prima facie evidence of an unreasonable time. However, circumstances of a particular situation may reduce the 60 day period. Failure

to repair a vehicle within a reasonable time can result in either the obligation to (a) replace the vehicle with an identical or reasonably equivalent vehicle, without charge, or (b) refund the purchase price in full, less a reasonable allowance for depreciation. The Act further prohibits dealers from selling a vehicle unless all outstanding recalls are performed. Any lessor is required to send a copy of the recall notification to the lessee within 10 days. Any subsequent stage manufacturer is required to forward this notice to its distributors and retail outlets within five working days.

Recall Campaign

Daimler Trucks
North America LLC

January 2012
FL620AB
NHTSA #11V-578 (School Buses)
NHTSA #12V-010 (Non-School Buses)
Transport Canada #11-418

Copy of Notice to Owners

Subject: FCCC Bus Chassis Side Marker/Directional Lights

For the Notice to U.S. Customers: This notice is sent to you in accordance with the requirements of the National Traffic and Motor Vehicle Safety Act.

For the Notice to Canadian Customers: This notice is sent to you in accordance with the Canadian Motor Vehicles Safety Act.

Daimler Trucks North America LLC, on behalf of its wholly owned subsidiary, Freightliner Custom Chassis Corporation, has decided that a defect which relates to motor vehicle safety exists on specific Thomas Built Buses Saf-T-Liner C2 school buses built on Freightliner Custom Chassis B2 chassis and Freightliner Custom Chassis S2 shuttle bus chassis manufactured January 5, 2011, through July 26, 2011.

Inaccurate fault detection values in the bulkhead module software may cause the side marker/directional lights to stop functioning after a few minutes of vehicle operation. Lights will resume operation after the vehicle is shut down and restarted. Failure of the side marker/directional lights to illuminate will result in decreased visibility of the bus and/or intended direction of travel and may increase the possibility of a vehicle crash.

The bulkhead module software will be updated.

Please contact an authorized Daimler Trucks North America dealer to arrange to have the recall performed and to ensure that parts are available at the dealership. To locate an authorized dealer, search online at www.Daimler-TrucksNorthAmerica.com. The Recall will take approximately an hour and will be performed at no charge to you.

You may be liable for any progressive damage that results from your failure to complete the Recall within a reasonable time after receiving notification

If you do not own the vehicle that corresponds to the identification number(s) which appears on the Recall Notification, please return the notification to the Warranty Campaigns Department with any information you can furnish that will assist us in locating the present owner. If you have leased this vehicle, Federal law requires that you forward this notice to the lessee within 10 days. If you are a subsequent stage manufacturer, Federal law requires that you forward this notice to your distributors and retail outlets within five working days. If you have paid to have this recall condition corrected prior to this notice, you may be eligible to receive reimbursement. Please see the reverse side of this notice for details.

For the Notice to U.S. Customers: If you have questions about this Recall, please contact the Warranty Campaigns Department at (800) 547-0712, 7:00 a.m. to 4:00 p.m. Pacific Time Monday through Friday, e-mail address DTNA.Warranty.Campaigns@Daimler.com, or the Customer Assistance Center at (800) 385-4357 after normal business hours. If you are not able to have the defect remedied without charge and within a reasonable time, you may wish to submit a complaint to the Administrator, National Highway Traffic Safety Administration, 1200 New Jersey Avenue, SE., Washington, DC 20590; or call the Vehicle Safety Hotline at (888) 327-4236 (TTY: 800-424-9153); or to http://www.safercar.gov.

For the Notice to Canadian Customers: If you have questions about this Recall, please contact the Warranty Campaigns Department at (800) 547-0712, 7:00 a.m. to 4:00 p.m. Pacific Time Monday through Friday, e-mail address DTNA.Warranty.Campaigns@Daimler.com, or the Customer Assistance Center at (800) 385-4357 after normal business hours.

We regret any inconvenience this action may cause but feel certain you understand our interest in motor vehicle safety.

WARRANTY CAMPAIGNS DEPARTMENT

Enclosure

Daimler Trucks North America LLC

Recall Campaign

January 2012
FL620AB
NHTSA #11V-578 (School Buses)
NHTSA #12V-010 (Non-School Buses)
Transport Canada #11-418

Reimbursement to Customers for Repairs Performed Prior to Recall

If you have already **paid** to have this recall condition corrected you may be eligible to receive reimbursement.

Requests for reimbursement may include parts and labor. Reimbursement may be limited to the amount the repair would have cost if completed by an authorized Daimler Trucks North America LLC dealer. The following documentation must be presented to your dealer for consideration for reimbursement.

Please provide original or clear copies of all receipts, invoices, and repair orders that show:

- The name and address of the person who paid for the repair.
- The Vehicle Identification Number (VIN) of the vehicle that was repaired.
- What problem occurred, what repair was done, when the repair was done.
- Who repaired the vehicle.
- The total cost of the repair expense that is being claimed.
- Proof of payment for the repair (such as the front and back of a cancelled check or a credit card receipt).

Reimbursement will be made by check from your Daimler Trucks North America LLC dealer.

Please speak with your Daimler Trucks North America LLC authorized dealer concerning this matter.

Recall Campaign

Daimler Trucks
North America LLC

January 2012
FL620AB
NHTSA #11V-578 (School Buses)
NHTSA #12V-010 (Non-School Buses)
Transport Canada #11-418

Work Instructions

Subject: FCCC Bus Chassis Side Marker/Directional Lights

Models Affected: Specific Thomas Built Buses Saf-T-Liner C2 school buses built on Freightliner Custom Chassis B2 chassis and Freightliner Custom Chassis S2 shuttle bus chassis manufactured January 5, 2011, through July 26, 2011.

Bulkhead Module Software Update

IMPORTANT: This procedure must be completed using the ServiceLink® diagnostic program.

1. Check the base label (Form WAR259) for a completion sticker for FL620 (Form WAR260) indicating this work has been done. The base label is usually located above the driver's window in buses. If a sticker for FL620 is present, no work is needed. If no sticker is present, continue with the next step.
2. Park the vehicle on a level surface, shut down the engine, and apply the parking brake. Chock the tires.
3. Connect the laptop being used to a power adapter, then connect the laptop connector to the diagnostic connector. See **Fig. 1**.
4. Turn the ignition switch to the "ON" position, or connect a battery charger to the vehicle.
5. In ServiceLink, click "Bulkhead Module."
6. Next, click "Features."
7. Click "Refresh Features List."
8. A message screen will appear showing "vehicle update successful." Click "OK."
9. Once the update is finished, verify that the reference parameter 26-02000-001 has the new release number P35129-C6.
10. Remove the laptop connector from the diagnostic connector.
11. Clean a spot on the base label (Form WAR259), write the Recall number, FL620, on a blank completion sticker (Form WAR260), and attach it to the base label.

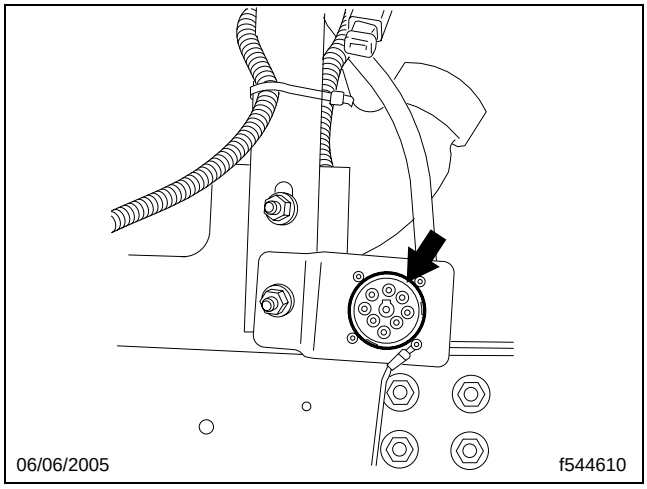

Fig. 1, Diagnostic Connector (location will vary)

BLUE BIRD

R08NC

DATE: **SEPTEMBER 18, 2008**

TO: **U.S. DEALERS**

SUBJECT: **RECALL R08NC** **FMVSS 221 SCHOOL BUS BODY JOINT STRENGTH NONCOMPLIANCE-INCORRECT RIVET PATTERN IN REAR ROOF CAP**

This notice is sent to you in accordance with the requirements of The National Traffic and Motor Vehicle Safety Act.

Blue Bird Body Company has decided that certain 2004 through 2009 model year Blue Bird All American and conventional school buses manufactured from March 06, 2003 through March 28, 2008 fail to conform to the National Motor Vehicle Safety Standard No. 221, (School Bus Body Joint Strength).

On the subject buses, the rivet pattern may be incorrect in sections of the rear roof sheet joint that attaches it to the rear roof cap. In the event of a crash, these panels may separate exposing the occupants to increased risk of injury. Blue Bird is conducting a recall to correct this noncompliance. Buses with the noncompliance must be corrected according to the instructions provided with recall R08NC, copy attached.

If our records indicate affected units were delivered in your service area, a printout identifying affected units is enclosed. Dealers should verify correct owners and that complete shipping addresses are provided for each listed vehicle. If you have in your possession or have sold a vehicle that was purchased from another dealer that may be affected by this recall, please notify me at 478-822-2242.

Dealers needing parts to correct this condition will need to inspect the rivet pattern using the enclosed template. Enter the number of rivets required, indicate your roof color and date of inspection on the enclosed inspection sheet and fax to Blue Bird Recall Administration at 478-822-2467 or email to bill.coleman@blue-bird.com. Rivets and sealer will be shipped at no charge via UPS.

If no rivets are found missing, indicate on the inspection reply sheet and return to Blue Bird.

BLUE BIRD CORPORATION
402 Blue Bird Blvd. PO Box 937 • Fort Valley, Georgia 31030
(478) 825-2021

Labor time allowed to inspect the rear roof cap is 0.3 hours (18 minutes) per bus.

Labor time allowed for installing rivets will be reimbursed at 2 minutes per rivet.

Warranty applications may be submitted to Blue Bird VIA ClaimTrac (use create campaign/bulletin claim).

Federal law requires that any vehicle lessor receiving this recall notice must forward a copy of this notice to the lessee within ten days.

Dealers are reminded of their responsibilities under section 154 of The National Traffic and Motor Vehicle Safety Act of 1991. Dealers are required to complete modifications on units in their inventory before delivering to the final owner. Reference Blue Bird Body Company Distributor Memo No. 42-92.

Questions regarding this recall campaign should be directed to me at (478) 822-2242.

Thank you,

Bill Coleman

Bill Coleman
Corporate Recall Administrator
Blue Bird Corporation

Table of Contents

R08NC

September 18, 2008

Dear Blue Bird Owner:

This notice is sent to you in accordance with the requirements of the National Traffic and Motor Vehicle Safety Act.

Blue Bird Body Company has decided that certain 2004 through 2009 model year Blue Bird All American and conventional school buses manufactured from March 06, 2003 through March 28, 2008 fail to conform to Federal Motor Vehicle Safety Standard No. 221, (School Bus Body Joint Strength).

On the subject buses, the rivet pattern may be incorrect in sections of the rear roof sheet joint that attaches it to the rear roof cap. In the event of a crash, these panels may separate exposing the occupants to increased risk of injury. Blue Bird is conducting a recall to correct this noncompliance. Buses with the noncompliance must be corrected according to the instructions provided with recall R08NC, copy attached.

Your Blue Bird bus(es) affected by recall R08NC are identified by body serial number(s) on the enclosed reply sheets. If you no longer own the subject bus(es), please complete the appropriate section of the pink cover sheet and return to Blue Bird in the enclosed pink postage prepaid envelope.

To receive parts required to correct this condition, you will need to inspect the rivet pattern using the enclosed template. On the enclosed reply sheet for R08NC enter the number of rivets omitted, indicate your roof color, date of inspection, and **correct UPS shipping address**. Sign and return the reply sheet in one of the enclosed pink reply envelopes. Rivets and sealer will be shipped at no charge via UPS to the address provided.

If no rivets are found missing, complete the pink reply sheet and return to Blue Bird in one of the enclosed pink postage prepaid reply envelopes.

Labor time allowed to inspect the rear roof cap is 0.3 hours (18 minutes) per bus.

Labor time allowed for installing rivets will be reimbursed at 2 minutes per rivet.

A qualified technician should perform this modification or you may contact your Blue Bird distributor for assistance. Reimbursement for labor may be obtained by completing the **pink** request for reimbursement sheet provided and returning it to Blue Bird in the enclosed **pink** postage prepaid envelope.

If the modifications/repairs directed by this notification were performed on your bus prior to the receipt of this recall notification, complete and sign the recall reply sheet and attached a copy of the work order/invoice. Mail the documents in the **pink** self-addressed postage paid envelope included with the recall notification to Blue Bird for warranty consideration. Reimbursements will be made in accordance with the requirements of the National Highway Transportation Safety Act, title 49 Code of Federal Regulations, Parts 573 and 577.

Federal law requires that any vehicle lessor receiving this recall notice must forward a copy of this notice to the lessee within ten days.

If Blue Bird Body Company should fail to or is unable to remedy this condition without charge to you, you may contact:

ADMINISTRATOR
NATIONAL HIGHWAY TRAFFIC SAFETY ADMINISTRATION
1200 NEW JERSEY AVENUE, SE
WASHINGTON, D.C. 20590

or you may call The National Highway Traffic Safety Administration toll free at:

1-888-327-4236
TTY: 1-800-424-9153
or go to: http://www.safercar.gov

Questions regarding this recall campaign should be directed to me at (478) 822-2242.

Thank you,

Bill Coleman

Bill Coleman
Corporate Recall Administrator
BLUE BIRD CORPORATION

Table of Contents

RECALL R08NC
INSPECTION SHEET

Body Number	Roof Color	Number Rivets Needed	Date Inspected

Ship Rivets to: Name: _____

Street Address: _____

City: _____ State: _____ ZIP _____

Telephone: _____

Inspected by: _____

BLUE BIRD

Rear Roof Cap Rivets RECALL

MODELS AFFECTED: *2005 through 2009 model Blue Bird Vision and All American School Buses manufactured at Fort Valley, Georgia from January 22, 2004 through March 28, 2008* ***and*** *2004 through 2007 model Blue Bird Vision and All American School Buses manufactured at Lafayette, Georgia from March 06, 2003 through June 16, 2006.*

R08NC

SERVICE RECALL

ISSUE

On some units, the rivet spacing may be incorrect in some segments of the rear roof sheet and rear roof cap joint, resulting in noncompliance with FMVSS 221, School Bus Body Joint Strength.

CORRECTIVE ACTION

Inspect the rivet spacing at the joint and install additional rivets as required by specification.

WARNING ***This procedure requires working from ladders or scaffolds to reach the top of the bus. Observe all safety precautions to secure the bus from rolling and for use of ladders or scaffolds.***

PROCEDURE

1 Park vehicle on level surface, apply parking brake, remove ignition key and chock wheels.

2 Inspect rivet spacing at rear roof sheet and rear roof cap joint. Joint must have a minimum of six rivets in an eight inch segment.

2.1 Place the template over the joint and parallel to the edge of the roof sheet, allowing roof rivets to be exposed through the opening in the template as shown.

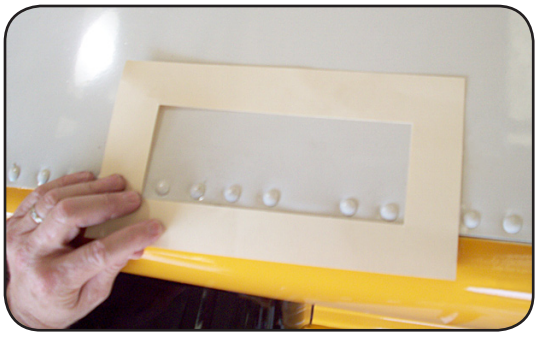

2.2 Move the template from one side of the rear roof cap to the opposite side.

2.3 If a segment in the rear roof cap joint contains less than six rivets, additional rivets are required. Mark each area that requires additional rivets.

2.4 If one rivet is required; add a rivet equally spaced between the two rivets with the largest space in this section.

2.5 If additional rivets are required; add additional rivets between the largest spaces until a minimum of six (6) rivets have been added in the eight (8) inch segment.

3 Install rivet/s at each mark. Using a short 17/64" drill bit, drill a hole through the roof cap, roof sheet, and rear bow flange. Be sure to drill hole on a common centerline with existing rivets.

BLUE BIRD

RECALL

4 Place a small amount of Vinyl Gray 5522 Sealant (Blue Bird # 0898627) in each drilled hole.

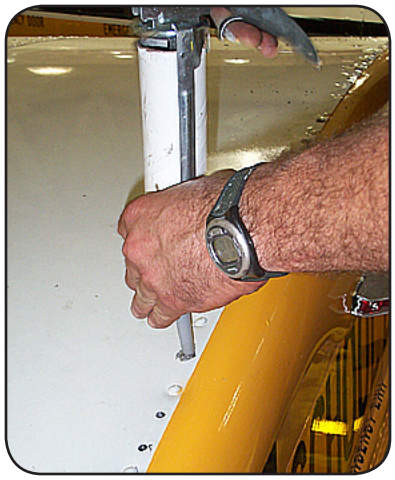

5 The supplied ¼" blind rivets (Blue Bird # 1854397) are pre-painted white or school bus chrome yellow. Install a rivet of the appropriate color into each hole.

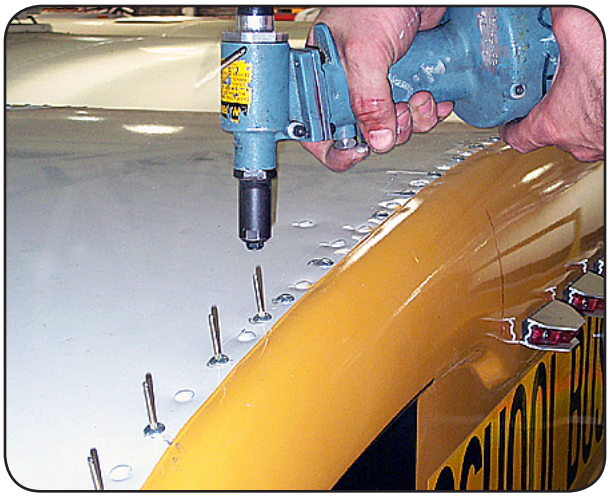

6 Clean up any sealant that may have squeezed out or smeared during rivet installation.

7 With the correct color paint, touch up the center of each blind rivet where the stem was removed during installation.

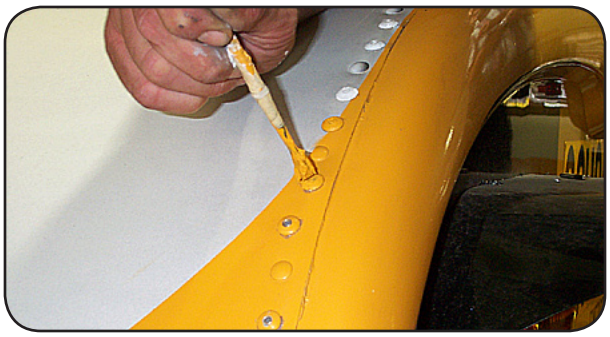

PARTS LIST

PART NUMBER	QUANTITY	DESCRIPTION
0898627	1 per bus	Tube, Vinyl Gray 5522 Sealant
1854397	As Required	Rivet, .25" Blind (both White and Yellow)

BLUE BIRD

R09PD

DATE: **APRIL 07, 2009**

TO: **U.S. DEALERS**

SUBJECT: **RECALL R09PD** **INCORRECT BOLTS AND/OR SPACER IN ENGINE COOLING FAN**

Dear Blue Bird Owner:

This notice is sent to you in accordance with the requirements of the National Traffic and Motor Vehicle Safety Act.

Blue Bird has decided that a defect which relates to motor vehicle safety exists on 2008 and 2009 model year "Vision" conventional school buses manufactured from January 18, 2007 through October 29, 2008 and equipped with Caterpillar C7 and C7 07engines.

On the subject buses, incorrect bolts and/or spacers may have been installed to attach the fan blade to the fan clutch. As a result, the fan blade may separate from the clutch and potentially cause property damage or personal injury to persons in or near the front of the bus. Blue Bird is conducting a recall to correct this defect. Buses with this defect must be modified according to the enclosed instructions for Recall R09PD

If our records indicate affected buses were delivered in your service area, a printout identifying affected buses is enclosed. **Dealers should verify correct owners and assure that complete shipping addresses are provided for each listed vehicle.**

If you have in your possession or have sold a bus that was purchased from another dealer that may be affected by this recall, please notify me at 478-822-2242.

NOTE: If Service Bulletin S08NR has already been completed on a unit no further action is required.

Replacement bolts will be shipped directly to owners so bolts can be replaced, if needed, at time of inspection.

Dealers should request replacement bolts for buses at their facility from Blue Bird Recall Administration. Dealers will need to provide the body number for each bus requiring inspection at their facility.

BLUE BIRD CORPORATION
P.O. Box 937 • Fort Valley, Georgia 31030
Phone: (478) 825-2021

Labor time to inspect for correct bolt and spacer installation is 0.1 hrs (6 minutes) per bus.

Labor time to install replacement bolts and spacer, if needed, is 0.4 hrs (24 minutes) per bus.

If the spacer is incorrect you will need to contact Blue Bird Recall Administration at 478-822-2242 for a replacement spacer. Dealers will need to provide body numbers for each bus requiring a replacement spacer.

Warranty applications for labor reimbursement may be submitted to Blue Bird iWarranty (Campaigns/Claims).

Federal law requires that any vehicle lessor receiving this recall notice must forward a copy of this notice to the lessee within ten days.

Dealers are reminded of their responsibilities under section 154 of The National Traffic and Motor Vehicle Safety Act of 1991. Dealers are required to complete modifications on units in their inventory before delivering to the final owner. Reference Blue Bird Body Company Distributor Memo No. 42-92.

Questions regarding this recall campaign should be directed to me at (478) 822-2242.

Thank you,

Bill Coleman

Bill Coleman
Corporate Recall Administrator
Blue Bird Corporation

BLUE BIRD

R09PD

April 07, 2009

Dear Blue Bird Owner:

This notice is sent to you in accordance with the requirements of the National Traffic and Motor Vehicle Safety Act.

Blue Bird has decided that a defect which relates to motor vehicle safety exists on certain 2008 and 2009 model year "Vision" conventional school buses manufactured from January 18, 2007 through October 29, 2008 and equipped with Caterpillar C7 and C7 07engines.

On the subject buses, incorrect bolts may have been installed to attach the fan blade to the fan clutch. On some of the buses incorrect spacers may also have been installed. As a result, the fan blade may separate from the clutch and potentially cause property damage or personal injury to persons in or near the front of the bus. Blue Bird is conducting a recall to correct this defect.

Buses with this defect must be modified according to the enclosed instructions for Recall R09PD. A qualified technician should perform Recall R09PD or you may contact your Blue Bird dealer for assistance.

Your Blue Bird bus(es) affected by this recall are identified by body serial number(s) on the enclosed reply sheets. If you no longer own the subject bus(es), please complete the appropriate section of the **pink** reply sheet and return to Blue Bird in the enclosed pink postage prepaid envelope.

NOTE: If Service Bulletin S08NR has already been completed on your bus(es) no further action is required.

Replacement bolts for Recall R09PD are enclosed with this notification so replacement bolts, if needed, can be installed at time of inspection.

Labor time to inspect for correct bolt and spacer installation is 0.1 hrs (6 minutes) per bus.

Labor time to install replacement bolts and spacer, if needed, is 0.4 hrs (24 minutes) perbus.

If the spacer is incorrect, you will need to contact Blue Bird Recall Administration at 478-822-2242 to obtain a replacement spacer. Owners will need to provide the body numbers for each bus requiring a replacement spacer.

BLUE BIRD CORPORATION
P.O. Box 937 • Fort Valley, Georgia 31030
Phone: (478) 825-2021

Reimbursement for labor may be obtained by completing the **pink** request for reimbursement sheet provided and returning it to Blue Bird in the enclosed **pink** postage prepaid envelope.

If the modifications directed by this notification were performed on your bus prior to the receipt of this recall notification, complete and sign the recall reply sheet and attached a copy of the work order/invoice. Mail the documents in the **pink** self-addressed postage paid envelope included with the recall notification to Blue Bird for warranty consideration. Reimbursements will be made in accordance with the requirements of the National Highway Transportation Safety Act, Title 49 Code of Federal Regulations, Parts 573 and 577.

Federal law requires that any vehicle lessor receiving this recall notice must forward a copy of this notice to the lessee within ten days.

If Blue Bird Body Company should fail to or is unable to remedy this condition without charge to you, you may contact:

ADMINISTRATOR
NATIONAL HIGHWAY TRAFFIC SAFETY ADMINISTRATION
1200 NEW JERSEY AVENUE, SE
WASHINGTON, D.C. 20590

Or, you may call The National Highway Traffic Safety Administration toll free at:

1-888-327-4236
TTY 1-800-424-9153

Or, go to: HTTP:/WWW.SAFERCAR.GOV

Questions regarding this recall campaign should be directed to me at (478) 822-2242.

Thank you,

Bill Coleman

Bill Coleman
Corporate Recall Administrator
BLUE BIRD CORPORATION

BLUE BIRD

Fan Clutch Spacers

RECALL

MODELS AFFECTED: *2008-2009 BBCV Visions w/ 2007 Cat Engines*

R09PD

ISSUE

Fan may separate from fan clutch and may damage fans blades, fan clutch, radiator, hoses and other surrounding components.

CORRECTIVE ACTION

Inspect fan spacer length and install new spacer and bolts as required.

WARNING ***Always follow all Federal, State, Local, and Shop safety standards and use proper safety equipment when performing this procedure.***

INSPECTION

1 Park vehicle on a level surface, apply parking brake, turn engine off, remove ignition key and chock wheels.

2 Disconnect batteries.

3 Open engine hood.

4 Measure the length of the spacer between the fan blade and the fan clutch. See Diagram and Chart to the right for correct installations and determine procedure needed.

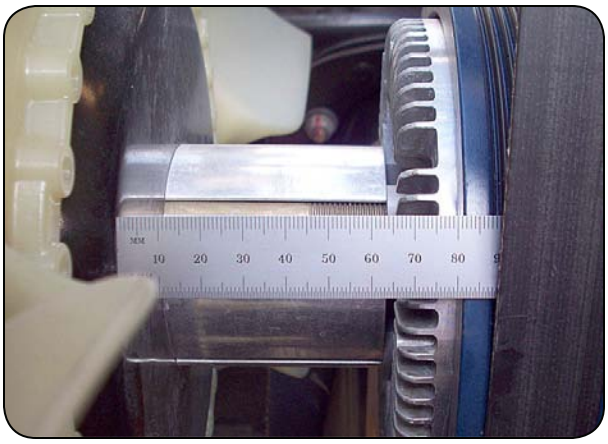

Inspection

PROCEDURE 1 ***(with correct spacer and wrong capscrews)***
For CAT C707 with CGI & DPF, and a 66.7mm (2 5/8 inch) spacer.
Note: Caterpillar C707 with CGI and DPF has a Regen switch mounted on the entrance door side fire wall.

NOTE: ***CAT C707 engines are equipped with Clean Gas Induction (CGI) and a Diesel Particulate Filter (DPF). CAT C7 and Export units are not equipped with CGI and DPF.***

PROCEDURE 2 ***(with wrong spacer and wrong capscrews)***
For CAT C707 with CGI & DPF, and a 52.8mm (2 5/64 inch) spacer.
Note: Caterpillar C707 with CGI and DPF has a Regen switch mounted on the entrance door side fire wall.

PROCEDURE 3 ***(with wrong spacer and wrong capscrews)***
For CAT C7 without CGI & DPF, or Export unit; with a 66.7mm (2 5/8 inch) spacer.

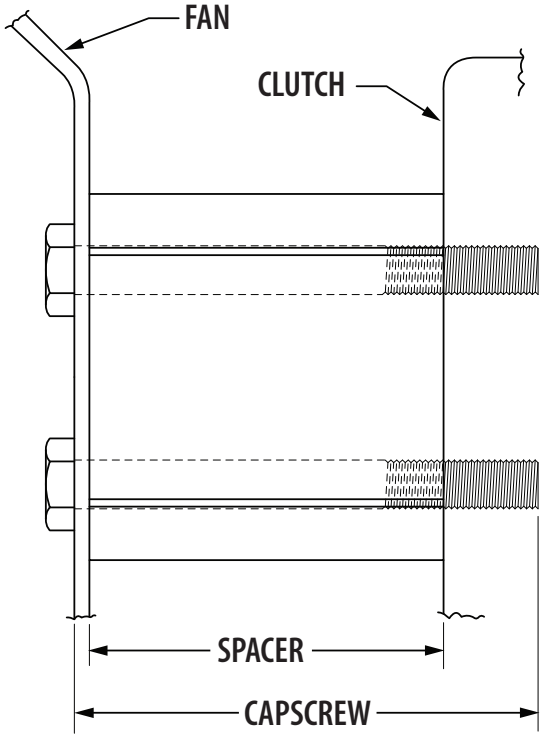

ENGINE	SPACER	CAPSCREW
CAT C707 with CGI & DPF	66.7mm (2 5/8 inches)	90mm M10-1.5 X 90mm
CAT C7 or Export without CGI & DPF	52.8mm (2 5/64 inches)	70mm M10-1.5 X 70mm

SERVICE RECALL

BLUE BIRD

RECALL

PROCEDURE 1 *(With correct spacer and wrong capscrews.)*

For CAT C707 with CGI & DPF, and a 66.7mm (2 5/8 inch) spacer.
Note: Caterpillar C707 with CGI and DPF has a Regen switch mounted on the entrance door side fire wall.

1 Remove and retain the four nuts attaching the fan shroud to the radiator. Slide the shroud rearward for access to the four capscrews attaching the fan to the fan clutch.

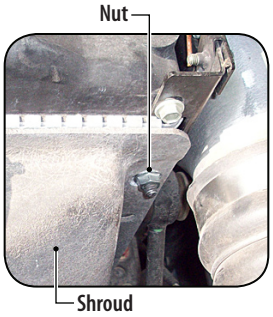

2 Remove the four 80mm capscrews and discard. Retain the four lock washers.

3 Install four 90mm capscrews (Blue Bird #10000385) with four lock washers and torque to 20-25 lb. ft. *Note: Four 90mm capscrews (Blue Bird #10000385) shipped with original Service Bulletin.*

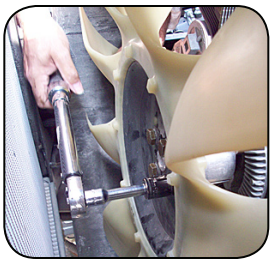

4 Slide fan shroud forward and reattach with four nuts removed in step one.

5 Close engine hood.

6 Reconnect batteries and place the bus back in service.

PARTS LIST

PART NUMBER	QUANTITY	DESCRIPTION
10000385	4	*Capscrew, Hex head, M10-1.5 x 90mm*

Supplied with original Service Bulletin.

PROCEDURE 2 *(With wrong spacer and wrong capscrews.)*

For CAT C707 with CGI & DPF, and a 52.8mm (2 5/64 inch) spacer.
Note: Caterpillar C707 with CGI and DPF has a Regen switch mounted on the entrance door side fire wall.

1 Remove and retain the four nuts attaching the fan shroud to the radiator. Slide the shroud rearward for access to the four capscrews attaching the fan to the fan clutch.

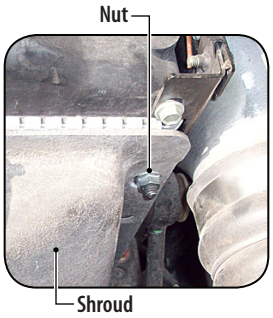

2 Remove and discard the four 80mm capscrews and spacer. Retain the four lock washers.

3 Install new Spacer (Blue Bird #10005240) with four 90mm capscrews (Blue Bird #10000385) and four lock washers. Torque to 20-25 lb. ft.

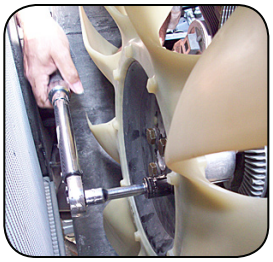

4 Slide fan shroud forward and reattach with four nuts removed in step one.

5 Close engine hood.

6 Reconnect batteries and place the bus back in service.

PARTS LIST

PART NUMBER	QUANTITY	DESCRIPTION
10005240	1	Spacer, Clutch, Fan, Horton, 00115258
10000385	4	**Capscrew, Hex head, M10-1.5 x 90mm**

Order only if not provided

BLUE BIRD

RECALL

PROCEDURE 3 *(Export only with wrong spacer and wrong capscrews.)*

For CAT C7 without CGI & DPF, or Export unit; with a 66.7mm (2 5/8 inch) spacer.

1 Remove and retain the four nuts attaching the fan shroud to the radiator. Slide the shroud rearward for access to the four capscrews attaching the fan to the fan clutch.

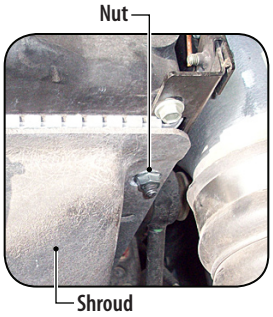

2 Remove and discard the four capscrews and spacer. Retain the four lock washers.

3 Install new Spacer (Blue Bird #10005241) with four 70mm capscrews (Blue Bird #01265990) and four lock washers. Torque to 20-25 lb. ft.

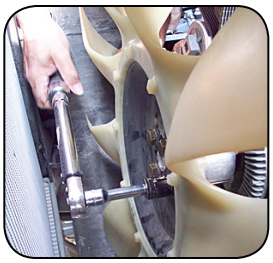

4 Slide fan shroud forward and reattach with four nuts removed in step one.

5 Close engine hood.

6 Reconnect batteries and place the bus back in service.

PARTS LIST

PART NUMBER	QUANTITY	DESCRIPTION
10005241	1	Spacer, Clutch, Fan, Horton, 00068057
01265990	4	Capscrew, Hex head, M10-1.5 x 700mm

BLUE BIRD

R09PF

DATE: **JUNE 30, 2009**

TO: **U.S. DEALERS**

SUBJECT: **RECALL R09PF** **INSUFFICIENT TORQUE ON STEERING GEAR MOUNTING FASTENERS**

This notice is sent to you in accordance with the requirements of the National Traffic and Motor Vehicle Safety Act.

Blue Bird has decided that a defect which relates to motor vehicle safety exists on certain 2009 model year All American school buses manufactured from July 22, 2008 through November 22, 2008.

On the subject buses, the steering gear mounting fasteners may not have been properly torqued. Improperly torqued fasteners may cause the steering gear to separate from the chassis frame which could result in a loss of steering control, possibly resulting in a vehicle crash. Blue Bird is conducting a recall to correct this defect. The steering gear mounting fasteners on the subject buses must be inspected and, if needed, torqued to the specifications provided in the enclosed instructions for Recall R09PF.

If our records indicate affected buses were delivered in your service area, a printout identifying affected buses is enclosed. **Dealers should verify correct owners and assure that complete shipping addresses are provided for each listed vehicle.**

If you have in your possession or have sold a bus that was purchased from another dealer that may be affected by this recall, please notify me at 478-822-2242.

Labor time to inspect and torque steering gear mounting fasteners is on e(1) hour per bus.

Warranty applications for labor reimbursement may be submitted to Blue Bird iWarranty (Campaigns/Claims).

Federal law requires that any vehicle lessor receiving this recall notice must forward a copy of this notice to the lessee within ten days.

BLUE BIRD CORPORATION
P.O. Box 937 • Fort Valley, Georgia 31030
Phone: (478) 825-2021

Dealers are reminded of their responsibilities under section 154 of The National Traffic and Motor Vehicle Safety Act of 1991. Dealers are required to complete modifications on units in their inventory before delivering to the final owner. Reference Blue Bird Body Company Distributor Memo No. 42-92.

Questions regarding this recall campaign should be directed to me at (478) 822-2242.

Thank you,

Bill Coleman

Bill Coleman
Corporate Recall Administrator
Blue Bird Corporation

BLUE BIRD

R09PF

June 30, 2009

Dear Blue Bird Owner:

This notice is sent to you in accordance with the requirements of the National Traffic and Motor Vehicle Safety Act.

Blue Bird has decided that a defect which relates to motor vehicle safety exists on certain 2009 model year All American school buses manufactured from July 22, 2008 through November 22, 2008.

On the subject buses, the steering gear mounting fasteners may not have been properly torqued. Improperly torqued fasteners may cause the steering gear to separate from the chassis frame which could result in a loss of steering control, possibly resulting in a vehicle crash. Blue Bird is conducting a recall to correct this defect. The steering gear mounting fasteners on the subject buses must be inspected and, if needed, torqued to the specifications provided in the enclosed instructions for Recall R09PF.

A qualified technician should perform this recall. You may contact your Blue Bird dealer to arrange to have this recall performed. Or, if you prefer, you may perform this recall yourself or have a qualified repair facility convenient to you perform this recall.

Your Blue Bird bus(es) affected by this recall are identified by body serial number(s) on the enclosed reply sheets. If you no longer own the subject bus(es), please complete the appropriate section of the **pink** reply sheet and return to Blue Bird in the enclosed pink postage prepaid envelope.

Labor time to inspect and re-torque the steering gear mounting fasteners is one (1) hour per bus.

Reimbursement for labor may be obtained by completing the **pink** request for reimbursement sheet provided and returning it to Blue Bird in the enclosed **pink** postage prepaid envelope.

BLUE BIRD CORPORATION
P.O. Box 937 • Fort Valley, Georgia 31030
Phone: (478) 825-2021

If the modifications directed by this notification were performed on your bus prior to the receipt of this recall notification, complete and sign the recall reply sheet and attached a copy of the work order/invoice. Mail the documents in the **pink** self-addressed postage paid envelope included with the recall notification to Blue Bird for warranty consideration. Reimbursements will be made in accordance with the requirements of the National Highway Transportation Safety Act, Title 49 Code of Federal Regulations, Parts 573 and 577.

Federal law requires that any vehicle lessor receiving this recall notice must forward a copy of this notice to the lessee within ten days.

If Blue Bird Body Company should fail to or is unable to remedy this condition without charge to you, you may contact:

ADMINISTRATOR
NATIONAL HIGHWAY TRAFFIC SAFETY ADMINISTRATION
1200 NEW JERSEY AVENUE, SE
WASHINGTON, D.C. 20590

Or, you may call The National Highway Traffic Safety Administration toll free at:

1-888-327-4236
TTY 1-800-424-9153

Or, go to: HTTP:/WWW.SAFERCAR.GOV

Questions regarding this recall campaign should be directed to me at (478) 822-2242.

Thank you,

Bill Coleman

Bill Coleman
Corporate Recall Administrator
BLUE BIRD CORPORATION

Steering Gear Bolts

RECALL

MODELS AFFECTED: *2009 All American Forward Engines and Rear Engines*

R09PF

RECALL CAMPAIGN

ISSUE

Steering gear mounting bolts may have been incorrectly torqued at installation.

CORRECTIVE ACTION

Inspect and re-torque the four bolts that attach the steering gear to the frame rail.

WARNING ***Always follow all Federal, State, Local, and Shop safety standards and use proper safety equipment when performing this procedure.***

PROCEDURE

1 Park the bus on a level surface, apply parking brakes, switch engine off and chock wheeels.

2 Disconnect the batteries removing the negative cable first.

WARNING ***When working underneath a vehicle, always support the unit with jack stands under the frame rail.***

For easiser access to the steering gear fasteners, additional clearance underneath the bus can be provided by raising the bus by means of a suitable floor jack or hydraulic lift/s. Raise the bus as needed and place suitable jack stands under each frame for support.

3 Inspect the bolts and nuts for any damage. If damaged, replace, *DO NOT* re-torque. If damage exist and new fasteners are required, contact:

Blue Bird Body Company
Attn: Recall Administrator
P.O. Box 937
Fort Valley, Georgia 31030
Phone: 478-822-2242

4 If no damage exist, re-torque the fasteners to 270-300 ft. lbs. See diagram below.

5 Remove jack stands if used and lower the bus.

6 Reconnect the batteries installing the negative battery cable last.

7 Remove wheel chocks and place bus back into service.

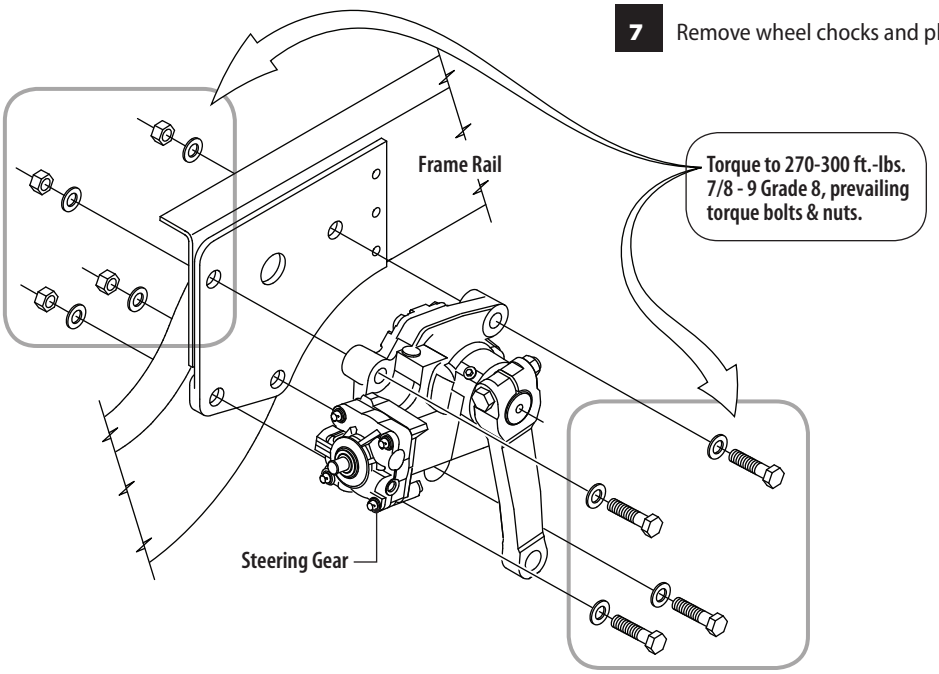

BLUE BIRD

R09PH

DATE: **AUGUST 11, 2009**

TO: **U.S. DEALERS**

SUBJECT: **RECALL R09PH** **POWER STEERING RESERVOIR GASKET FAILURE**

This notice is sent to you in accordance with the requirements of the National Traffic and Motor Vehicle Safety Act.

Blue Bird has decided that a defect which relates to motor vehicle safety exists on 2008, 2009 and 2010 model year "Vision" conventional school buses manufactured from March 27, 2007 through June 10, 2009.

On the subject buses, the lid gasket on the power steering reservoir may deteriorate and contaminate the power steering fluid resulting in potential loss of power steering assist. The loss of power steering assist could result in a vehicle crash.

Blue Bird is conducting a recall to correct this defect. Buses with this defect must be modified according to the enclosed instructions for Recall R09PH

If our records indicate affected buses were delivered in your service area, a printout identifying affected buses is enclosed. **Dealers should verify correct owners and assure that complete shipping addresses are provided for each listed vehicle.**

If you have in your possession or have sold a bus that was purchased from another dealer that may be affected by this recall, please notify me at 478-822-2242.

Labor time required to replace the power steering reservoir lid gasket is 0.4 hours (24 minutes) per bus.

If the power steering reservoir lid gasket has deteriorated and any part of the gasket is missing, the steering system may be contaminated and must be drained and flushed. Labor time to drain and flush the steering system is 2 hours per bus.

Replacement gaskets for stock units must be requested from Blue Bird Recall Administration. You will need to provide body number(s) and a shipping address.

A yellow reply sheet is provided with the owner notification letter so owners may request replacement gaskets direct from Blue Bird Recall Administration.

BLUE BIRD CORPORATION
P.O. Box 937 • Fort Valley, Georgia 31030
Phone: (478) 825-2021

Warranty applications for labor reimbursement may be submitted to Blue Bird iWarranty (Campaigns/Claims).

Federal law requires that any vehicle lessor receiving this recall notice must forward a copy of this notice to the lessee within ten days.

Dealers are reminded of their responsibilities under section 154 of The National Traffic and Motor Vehicle Safety Act of 1991. Dealers are required to complete modifications on units in their inventory before delivering to the final owner. Reference Blue Bird Body Company Distributor Memo No. 42-92.

Questions regarding this recall campaign should be directed to me at (478) 822-2242.

Sincerely,

Bill Coleman

Bill Coleman
Corporate Recall Administrator
Blue Bird Corporation

BLUE BIRD

R09PH

August 11, 2009

Dear Blue Bird Owner:

This notice is sent to you in accordance with the requirements of the National Traffic and Motor Vehicle Safety Act.

Blue Bird has decided that a defect which relates to motor vehicle safety exists on certain 2008, 2009 and 2010 model year "Vision" conventional school buses and non-school buses manufactured from March 27, 2007 through June 10, 2009.

On the subject buses, the lid gasket on the power steering reservoir may deteriorate and contaminate the power steering fluid resulting in potential loss of power steering assist. The loss of power steering assist could result in a vehicle crash.

A qualified technician should perform this recall. You may contact your Blue Bird dealer to arrange to have this recall performed. Or, if you prefer, you may perform this recall yourself or have a qualified repair facility convenient to you perform this recall.

Your Blue Bird bus(es) affected by this recall are identified by body serial number(s) on the enclosed reply sheets. If you no longer own the subject bus(es), please complete the appropriate section of the **pink** reply sheet and return to Blue Bird in the enclosed pink postage prepaid envelope.

To receive replacement gaskets for your power steering reservoir lid, verify your shipping address on the enclosed yellow reply sheet, sign and return to Blue Bird in the pink postage paid reply envelope. Replacement gaskets will be shipped via UPS ground service to the address provided. Note: UPS does not ship to P.O. boxes.

Labor time to replace the power steering reservoir lid gasket is 0.4 hrs (24 minutes) per bus.

If the power steering reservoir lid gasket has deteriorated and any part of the gasket is missing, the steering system may be contaminated and must be drained and flushed. Labor time to drain and flush the steering system is 2 hours per bus.

Reimbursement for labor may be obtained by completing the **pink** request for reimbursement sheet provided and returning it to Blue Bird in the enclosed **pink** postage prepaid envelope.

BLUE BIRD CORPORATION
P.O. Box 937 • Fort Valley, Georgia 31030
Phone: (478) 825-2021

Federal law requires that any vehicle lessor receiving this recall notice must forward a copy of this notice to the lessee within ten days.

If the modifications directed by this notification were performed on your bus prior to the receipt of this recall notification, complete and sign the recall reply sheet and attached a copy of the work order/invoice. Mail the documents in the **pink** self-addressed postage paid envelope included with the recall notification to Blue Bird for warranty consideration. Reimbursements will be made in accordance with the requirements of the National Highway Transportation Safety Act, Title 49 Code of Federal Regulations, Parts 573 and 577.

If Blue Bird Body Company should fail to or is unable to remedy this condition without charge to you, you may contact:

ADMINISTRATOR
NATIONAL HIGHWAY TRAFFIC SAFETY ADMINISTRATION
1200 NEW JERSEY AVENUE, SE
WASHINGTON, D.C. 20590

Or, you may call The National Highway Traffic Safety Administration toll free at:

1-888-327-4236
TTY 1-800-424-9153

Or, go to: HTTP:/WWW.SAFERCAR.GOV

Questions regarding this recall campaign should be directed to me at (478) 822-2242.

Thank you,

Bill Coleman

Bill Coleman
Corporate Recall Administrator
BLUE BIRD CORPORATION

Power Steering Reservoir Gasket

RECALL

BLUE BIRD

MODELS AFFECTED: *2009-2010 BBCV Visions and all 2008 BBCV Visions serviced under bulletin, S07MU Power Steering Reservoir Cap*

R09PH

RECALL CAMPAIGN

ISSUE

Power steering reservoir cap gasket may soften and break apart which may cause power steering pump to not function correctly.

CORRECTIVE ACTION

Replace the existing gasket with new gasket made of approved Garlock material.

WARNING ***Always follow all Federal, State, Local, and Shop safety standards and use proper safety equipment when performing this procedure.***

PROCEDURE

WARNING ***Perform this procedure with Power Steering System components and fluid at ambient temperature.***

1 Park vehicle on level surface with front tires straight forward and apply parking brake. Remove key and chock wheels.

2 Raise engine hood and locate Power Steering Reservoir on driver's side frame rail.

3 Clean around the reservoir cap and adjacent components before proceeding.

4 Remove and retain the retaining nut and flat washer; discard the rubber washer.

5 Carefully remove the reservoir cap and gasket.

6 Inspect the gasket.

6.1 Carefully wipe any excess fluid residue from the gasket.

6.2 Look for signs of deterioration and/or separation. If gasket has separated and any part is missing, the steering system may be contaminated and must be drained and flushed. Proceed to Step 7.

6.3 If gasket sags or bulges but has not separated or broken apart (is intact) steering system has not been contaminated by decaying gasket material, proceed to Step 8.

7 Drain and flush steering system following ordered steps outlined in "**TRW Flush and Fill Service Procedure #SRV-100**" on pages 3 - 6 of this recall. Additional service information can be obtained at: **http://trucksteering.trwauto.com/files/TRW800.pdf**

- Replace power steering reservoir filter with new filter, B.B. part #00118439 obtainable from:

Blue Bird Body Company
Attn: Recall Administrator
P.O. Box 937
Fort Valley, Georgia 31030
Phone: 478-822-2242

- Refill using power steering fluid (***DEXRON III or FINA Multi-Purpose ATF***) until the fluid is at the half way level in the sight glass.

CAUTION ***Do Not use Dexron VI fluid.***

CAUTION ***Do Not overfill.***

CAUTION ***Do Not allow contaminants to enter the power steering reservoir.***

- Normal service interval for the filter is 12 months / 12,000 miles whichever occurs first. More frequent filter replacement may be required under severe duty conditions.

8 Remove and discard gasket from reservoir cap.

9 Clean any remaining glue or other contaminants from the surface of the reservoir cap.

10 Install large flat washer onto spring and stud inside reservoir.

BLUE BIRD

RECALL

11 Place the side of the new gasket with the printed surface next to the cap and align the holes in the gasket with the holes in the cap.

CAUTION ***Do Not apply any type of gasket sealant to the new gasket or reservoir***

12 Place the new assembly back onto the reservoir stud, squaring the sides of the cap and gasket to the sides of the reservoir.

13 While pressing the cap down against the spring, install the new small rubber washer and the small flat washer removed in Step 4.

14 Install the retaining nut onto the stud and tighten while holding the cap and gasket square to the reservoir. Torque the retaining nut to 10 ft. lbs.

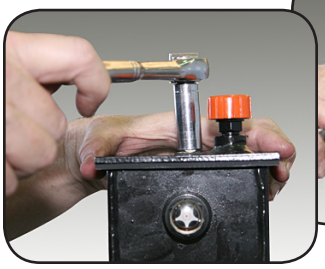

Square and tighten

then Torque to 10 ft. lbs.

15 Remove the breather cap and verify that the holes in the reservoir cap and gasket are aligned. Replace cap.

16 Start engine and steer bus full left to full right 5 - 6 times.

17 Check reservoir cap and gasket for leaks.

18 Recheck fluid level in sight glass and fill as necessary.

CAUTION ***Do Not overfill.***

19 Close hood, remove chocks and place bus back in normal service..

PARTS LIST

PART NUMBER	QUANTITY	DESCRIPTION
10011573	1	Kit, Power Steering Reservoir Gasket
00118439	As Req'd.	Filter Assy, Power Steering Reservoir

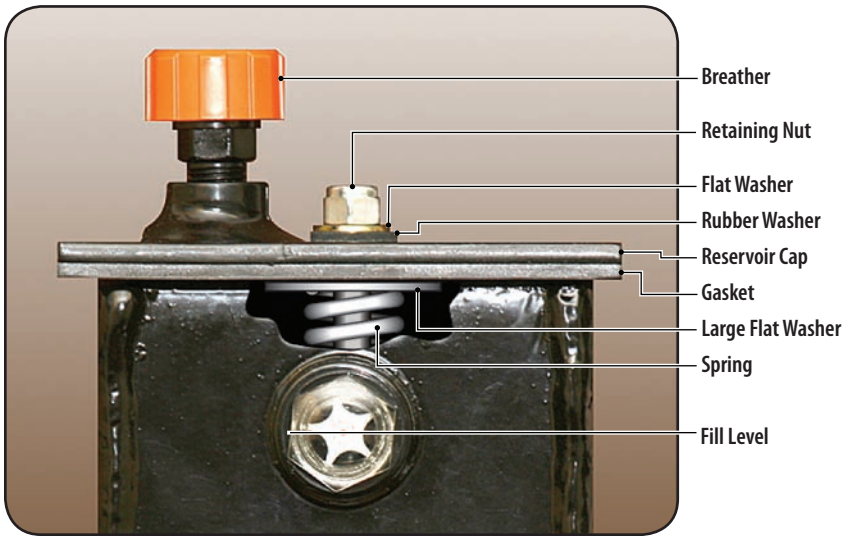

BLUE BIRD

RECALL

R09PH

RECALL CAMPAIGN

TRW Automotive
Commercial Steering Systems

Service Procedure #SRV-100

Flushing and Filling the Steering System

Draft August, 2008

This TRW Commercial Steering Systems service procedure has been written to help you repair commercial vehicles more efficiently. This procedure should not replace your manuals; you should use them together. These materials are intended for use by properly trained, professional mechanics, NOT "Do-it-yourselfers". You should not try to diagnose or repair steering problems unless you have been trained, and have the right equipment, tools and know-how to perform the work correctly and safely.

NOTE **The steering system must be flushed every time a gear, pump, or other major components get replaced, regardless if the components are new or are remanufactured**

1. Set parking brake on vehicle and block rear wheels.
2. Raise the front end off the ground.
3. Take vehicle out of gear and put into neutral position.
4. Raise hood and wipe down area around the steer ing gear and the hydraulic lines related to the steering system.
5. Place a drip pan under the steering gear to catch the oil. If the system includes an assist cylinder, place a pan under the assist cylinder to catch draining oil.
6. Remove both the pressure and return lines (Figure 1) from the steering gear and allow the oil to drain into the empty container. If applicable, remove the two pressure lines from the assist gear or cylinder and drain into a drip pan. Remove hoses as required to al low cooler to drain its oil tubes.
7. Remove filter (Figure 2) from the power steering fluid reservoir and discard. Disconnect the supply line from the reservoir.
8. Rinse and clean the inside of the reservoir with automatic transmission fluid. Do not use a shop rag to wipe the inside of the reservoir. If the reservoir is made from plastic inspect for cracks and damage. Replace with a new part if necessary.
9. Turn steering wheel from full left to full right 3-4 times. Collect the drained oil in the same container(s) as in Step 6. This will purge the oil from the steering gear(s).

Figure 1

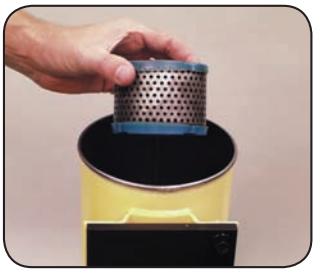

Figure 2

Figure 3

10. Reconnect pressure and return lines to the steering gear(s). Connect the supply line to the reservoir and then tighten all fittings.

11. Install new filter element into the reservoir.

12. Clean reservoir filler cap with automatic transmission fluid. Inspect gasket and replace if necessary.

13. Inspect all hydraulic hoses (Figure 3) for cracks, soft or sweat spots and signs of local collapse (remove all covers/corrugated tubing from hoses to do this) and replace any that are found to be defective.

14. Check any fittings and connectors for blockages. Clear any blockages using an appropriate method or use a new fitting/connector.

15. Fill reservoir with automatic transmission fluid and reinstall the filler cap (Figure 4).

16. Start engine for 10 seconds, stop, and check reservoir fluid level and top off if necessary. You may need to repeat this procedure 3 or 4 times.

17. Upon completion of filling the reservoir, start the engine and let it idle. At engine idle, steer full right and full left (Figure 5) once and return to straight ahead. Stop engine and check power steering reservoir level and top off if required.

⚠ CAUTION **Do not hold steering wheel at full turn for longer than 10 seconds as this will cause system to overheat**

18. Restart engine and steer full turns each direction 3 or 4 times.

19. Stop engine and recheck reservoir fluid level and adjust to correct level, if needed.

20. Inspect system for leaks and correct if necessary.

21. Bleed air from the system (see procedure below).

22. Remove drip pan and lower vehicle.

⚠ CAUTION **Recycle all used oil using an appropriate, environmentally accepted, method.**
DO NOT reuse used oil as its material properties and contamination levels will be unknown.

23. Remove blocks from wheels and return vehicle for normal service.

Figure 4

Figure 5

Air Bleeding the Steering System

Visual Identification

When you air bleed a steering system, you are simply allowing air trapped in the cavities of the steering gear to escape. As a general rule, if your steering gear is a "standard mount", you should use the Automatic Bleed method. If your gear is an "inverted mount", you will need to use the Manual Bleed method to purge the trapped air from the gear.

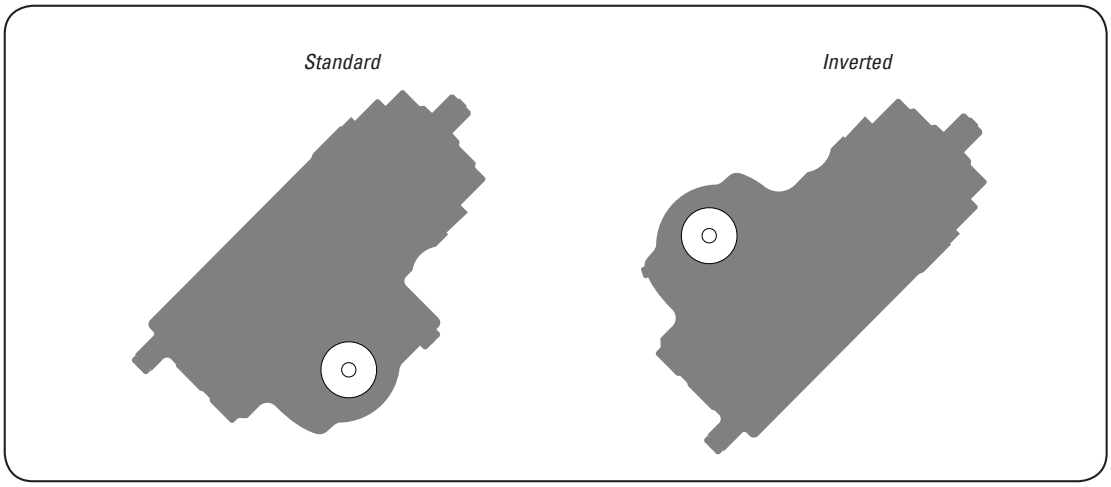

Gear Mounting Configurations

Automatic Bleed Gears

1. Fill the reservoir.
2. Start the engine, let it run for 10 seconds - without steering, then shut it off.
3. Check the reservoir, and refill if the fluid level has dropped.
4. Repeat at least three times, checking and refilling the reservoir each time if necessary.

NOTE	**Do not allow the fluid level to drop significantly or run out of the reservoir. This may induce air into the system.**

5. Start the engine and let it idle for 2 minutes - without steering. Shut off the engine and check the fluid level in the reservoir. Refill if required.
6. Start the engine again. Steer the vehicle from full left to full right several times. Automatic bleed systems should now be free from trapped air.
7. Finally, be sure to check the fluid level in the reservoir. Refill if necessary before returning the vehicle to service.

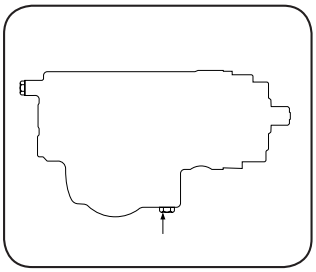

Auto Bleed Plug Location

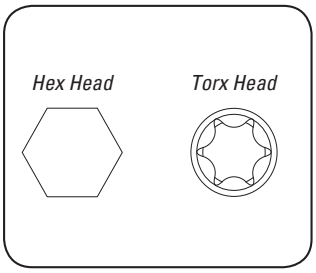

Auto Bleed Plug Styles

BLUE BIRD

RECALL

Manual Bleed Gears

1. Fill the reservoir.
2. Start the engine, let it run for 10 seconds - without steering, then shut it off.
3. Check the reservoir, and refill if the fluid level has dropped.
4. Repeat this process at least three times, checking and refilling the reservoir each time if necessary.

NOTE **Do not allow the fluid level to drop significantly or run out of the reservoir. This may induce air into the system**.

5. Start the engine and let it idle for 2 minutes - without steering. Shut off the engine and check the fluid level in the reservoir. Refill if required.
6. Start the engine again. Steer the vehicle from full left to full right several times.
7. Again, check the fluid level in the reservoir.
8. With the engine idling, steer from full left turn to full right turn several times. Stop steering with the wheels pointed straight ahead and loosen the manual bleed screw 2-3 turns.
9. Allow air and aerated fluid to "bleed out" until fluid appears without bubbles.
10. Close the bleed screw, refill the reservoir if required.
11. Repeat steps 8, 9 and 10 three or four times until all the air is discharged. Torque manual bleed screw to 45 in•lb.

⚠CAUTION **Do not turn steering wheel with bleed screw loosened.**

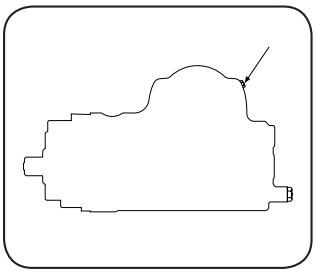

Manual Bleed Screw Location

Figure 1

Figure 2

5/16" Hexagon Screw

Manual Bleed Screw Style

TRW Commercial Steering Systems
P.O. Box 60
Lafayette, IN 47902
Phone: 765.423.5377
Fax: 765.429.1868

BLUE BIRD

R09PM

DATE: **JANUARY 11, 2010**

TO: **U.S. DEALERS**

SUBJECT: **RECALL R09PM** **OFFSET LEG BARRIER PAD AND 2/3 PASSENGER SEAT BACK PAD NONCOMPLIANCE**

This notice is sent to you in accordance with the requirements of The National Traffic and Motor Vehicle Safety Act.

Blue Bird Corporation has decided that certain school buses identified below by model year and model, may fail to conform to the requirements of Federal Motor Vehicle Safety Standard No. 222, "School Bus Passenger Seating and Crash Protection".

> 2008 through 2010 model year Blue Bird "Micro Bird" school buses manufactured from August 28, 2007 through May 07, 2009 and equipped with offset leg barriers.
>
> 2004 through 2010 model year "Vision" school buses manufactured from January 30, 2003 through May 07, 2009 and equipped with offset leg barriers and 2/3 passenger seats.
>
> 2004 through 2010 model year All American school buses manufactured from January 30, 2003 through May 07, 2009 and equipped with offset leg barriers and 2/3 passenger seats.
>
> 2004 through 2010 model year conventional school buses manufactured from February 01, 2003 through May 24, 2007 and equipped with offset leg barriers and 2/3 passenger seats.

The offset leg barrier frame pad and the 2/3 seat back pad on the subject buses may have been installed incorrectly or an incorrect pad may have been installed which could result in personal injury in the event of a vehicle crash. Blue Bird is conducting a recall to correct this condition. The subject buses must be modified according to the enclosed instructions for Recall R09PM.

If our records indicate buses subject to this recall were delivered in your service area, a printout identifying affected buses is enclosed. **Dealers should verify correct owners and assure that complete mailing and shipping addresses are provided for each listed owner.**

BLUE BIRD CORPORATION
P.O. Box 937 • Fort Valley, Georgia 31030
Phone: (478) 825-2021

If you have in your possession or have sold a bus that was purchased from another dealer that may be affected by this recall, please notify me at 478-822-2242.

Blue Bird is unsure of the quantity of offset leg barrier pads and 2/3 seatback pads that will actually need to be replaced. Therefore, a limited number of parts for Recall R09PM are on order at this time. Parts are only to be ordered based on dealer/owner inspection results.

For recall R09PM Dealers and owners must order replacement barrier pads and 2/3 seat back pads as needed through Recall Administration. Parts orders for R09PM will be drop shipped directly to the dealers/owners from the pad manufacturer.

Allowed labor times for performing Recall R09PM are listed below:

Labor time to inspect 1 pad is 0.1hr.
Labor time to inspect and repair 1 pad is 0.6hrs.
Labor time to inspect and repair 2 pads is 1.2hrs.
Labor time to inspect and repair 3 pads is 1.8hrs.

Warranty applications may be submitted to Blue Bird iWarranty (Campaigns/Claims).

Federal law requires that any vehicle lessor receiving this recall notice must forward a copy of this notice to the lessee within ten days.

Dealers are reminded of their responsibilities under section 154 of The National Traffic and Motor Vehicle Safety Act of 1991. Dealers are required to complete modifications on units in their inventory before delivering to the final owner. Reference Blue Bird Body Company Distributor Memo No. 42-92.

Questions regarding this recall campaign should be directed to me at (478) 822-2242.

Thank you,

Bill Coleman

Bill Coleman
Corporate Recall Administrator
Blue Bird Corporation

BLUE BIRD

R09PM

January 11, 2010

Dear Blue Bird Owner:

This notice is sent to you in accordance with the requirements of The National Traffic and Motor Vehicle Safety Act.

Blue Bird Corporation has decided that certain school buses identified below by model year and model, may fail to conform to the requirements of Federal Motor Vehicle Safety Standard No. 222, "School Bus Passenger Seating and Crash Protection".

> 2008 through 2010 model year Blue Bird "Micro Bird" school buses manufactured from August 28, 2007 through May 07, 2009 and equipped with offset leg barriers.
>
> 2004 through 2010 model year "Vision" school buses manufactured from January 30, 2003 through May 07, 2009 and equipped with offset leg barriers and 2/3 passenger seats.
>
> 2004 through 2010 model year All American school buses manufactured from January 30, 2003 through May 07, 2009 and equipped with offset leg barriers and 2/3 passenger seats.
>
> 2004 through 2010 model year conventional school buses manufactured from February 01, 2003 through May 24, 2007 and equipped with offset leg barriers and 2/3 passenger seats.

The offset leg barrier frame pad and the 2/3 seat back pad on the subject buses may have been installed incorrectly or an incorrect pad may have been installed which could result in personal injury in the event of a vehicle crash. Blue Bird is conducting a recall to correct this condition. The subject buses must be modified according to the enclosed instructions for Recall R09PM.

Your Blue Bird bus(es) affected by this recall are identified by body serial number(s) on the enclosed reply sheets. If you no longer own the subject bus(es), please complete the appropriate section of the **yellow** reply sheet and return to Blue Bird in the enclosed pink postage prepaid envelope.

To receive parts required to correct this condition, you must inspect each barrier pad and and each 2/3 seat back pad according to the attached instructions, record your findings on the enclosed "R09PM Recall Inspection" sheet, sign and return to Blue Bird in the pink self addressed postage prepaid envelope. Replacement pads, if needed, will be shipped "No Charge" to you.

BLUE BIRD CORPORATION
P.O. Box 937 • Fort Valley, Georgia 31030
Phone: (478) 825-2021

You may contact your Blue Bird dealer to arrange to have this recall performed. Or, if you prefer, you may perform this recall yourself or have a qualified repair facility convenient to you perform this recall. A qualified technician should perform this recall.

Allowed labor times for performing Recall R09PM are listed below:

Labor time to inspect 1 pad is 0.1 hr.
Labor time to inspect and repair 1 pad is 0.6 hrs.
Labor time to inspect and repair 2 pads is 1.2 hrs.
Labor time to inspect and repair 3 pads is 1.8 hrs.

Reimbursement for labor may be obtained by completing the **pink** request for reimbursement sheet provided and returning it to Blue Bird in the enclosed **pink** postage prepaid envelope.

If the modifications directed by this notification were performed on your bus prior to the receipt of this recall notification, complete and sign the recall reply sheet and attach a copy of the work order/invoice. Mail the documents in the **pink** self-addressed postage paid envelope included with the recall notification to Blue Bird for warranty consideration. Reimbursements will be made in accordance with the requirements of the National Highway Transportation Safety Act, Title 49 Code of Federal Regulations, Parts 573 and 577.

Federal law requires that any vehicle lessor receiving this recall notice must forward a copy of this notice to the lessee within ten days.

If Blue Bird Body Company should fail to or is unable to remedy this condition without charge to you, you may contact:

ADMINISTRATOR
NATIONAL HIGHWAY TRAFFIC SAFETY ADMINISTRATION
1200 NEW JERSEY AVENUE, SE
WASHINGTON, D.C. 20590

Or, you may call The National Highway Traffic Safety Administration toll free at:

1-888-327-4236
TTY 1-800-424-9153

Or, go to: HTTP:/WWW.SAFERCAR.GOV

Questions regarding this recall campaign should be directed to me at (478) 822-2242.

Thank you,

Bill Coleman

Bill Coleman
Corporate Recall Administrator
BLUE BIRD CORPORATION

Table of Contents

Recall R09PM Inspection Sheet

Body Number	Date Inspected	Drivers Side Barrier		Curb Side Barrier		2/3 Seat Back Pad	
		Good	Replace	Good	Replace	Good	Replace

Ship Replacement Pad(s) to:

School or Company Name

Street Address (No P.O. boxes)

City, State, ZIP

Date Telephone

Signature

Offset Leg Barrier & 2/3 Seat Back Pads

RECALL

MODELS AFFECTED: *School Bus Models Equipped with Offset Leg Barriers and/or 2/3 Seats, Built January 30, 2003 and Later and Delivered May 06, 2009 and Earlier*

R09PM

RECALL CAMPAIGN

ISSUE

On some affected buses, Barriers and/or 2/3 Seats with offset floor-mounted supports may have incorrect foam pad assemblies installed, resulting in a noncompliance with FMVSS 222 S5.3.2 Leg Protection Zone.

CORRECTIVE ACTION

This procedure describes the necessary inspection to determine if incorrect pad is installed, and replacement of incorrect pads.

PROCEDURE

WARNING ***Always follow all federal, state, local, and shop safety standards and use proper safety equipment when performing this procedure.***

1 Thoroughly study and understand the following details of this issue before performing inspections:

- Barrier and Seat Back Pads Construction. The Pads are generally assembled from several pieces of two different types of foam material:
  - Non-rigid ("spongy") foam forms the majority of the Pads.
  - Rigid expanded polystyrene ("styrofoam-like") boards are used to cover frame members in certain "collision impact zone" areas.

Once familiar with the construction, the edges between the two types of foam are easy to distinguish by feeling along the installed seat back or barrier cover, as will be described in Step 2.

- Correct Pads For Barrier and 2/3 Seat Backs. The offset support legs of Seat Barriers and 2/3 Seat Assemblies extend vertically inside the back frame. These vertical frame members are required to be covered by the rigid foam components of the Pad Assembly.
- Incorrect Pads For Barrier and 2/3 Seat Backs. If a Pad Assembly for a regular full-width seat is installed on a Barrier, or on a 2/3 Seat Back, the vertical extension of the support legs are not sufficiently covered by the rigid foam type.

INCORRECT
Pad for regular seat installed

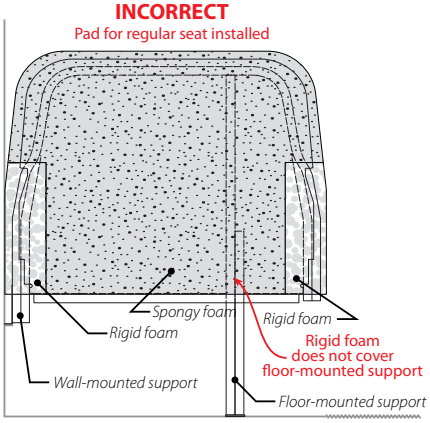

INCORRECT
Pad for opposite side Barrier or 2/3 Seat installed

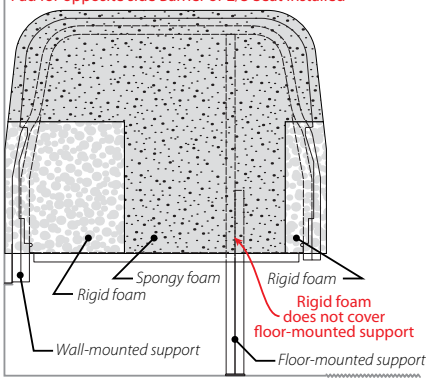

CORRECT

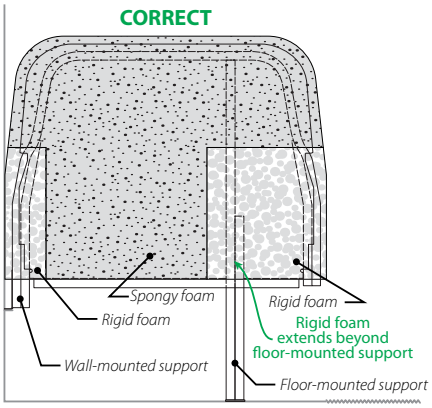

2 Inspect each Left and Right Offset Leg Barrier and each 2/3 Seat Assembly to ensure the correct Pad Assembly is installed:

2.1 On the rear side of the Barrier or Seat Assembly back, starting at aisle-side lower corner, press a hand near the bottom edge and move slowly toward the middle of the back. A change in softness can be easily felt where the rigid foam ends and the spongy foam begins. Mark this location, and compare it to the location of the offset leg portion of the frame.

The edge of the rigid foam inside the cover of a Barrier or a 2/3 Seat extends beyond the vertical support leg, which is offset from the aisle-side of the seat.

The pad of a regular seat back also has rigid foam pieces, but they do not extend as far from the aisle-side of the seat, because the vertical support leg is not offset.

2.2 If the location of the end of the rigid foam cannot be clearly determined by the above-described method, remove the metal trim from the bottom of the back cover and inspect visually.

2.3 Note your findings on the Recall Inspection Sheet, provided, and inspect the next Barrier or 2/3 Seat until all of those on the bus are inspected. For each:

- If the rigid foam spans beyond the offset leg, the correct Pad Assembly is installed, and no rework is required.
- If the rigid foam does not extend beyond the offset leg, an incorrect Pad Assembly is installed, and must be replaced with a correct Pad Assembly. Proceed to Step 3 to perform the Pad replacement on a Barrier Assembly. Proceed to Step 4 to perform the Pad replacement on a 2/3 Seat Assembly.

2.4 Return the completed Recall Inspection Sheet to Blue Bird per the Recall instructions.

3 Pad Replacement For an Offset Leg Barrier Assembly:

WARNING ***Barrier pad must be installed correctly to comply with FMVSS 222 S5.3.2 Leg Protection Zone.***

3.1 If the Barrier is a right-side Barrier, behind the entrance door stepwell, remove the handrail on the entrance door side.

3.2 Remove the metal trim along the bottom of the back cover, and the lower panel (if so equipped).

3.3 Carefully remove the staples that atach the cover to the frame along the bottom edge, taking care not to damage the Cover.

3.4 Remove the Cover and retain it for reinstallation.

3.5 Remove and discard the incorrect Pad Assembly.

3.6 Install a new Pad Assembly, with the the rigid foam sections toward the rear of the bus.

3.7 Reinstall the Cover. Pull the Cover tightly and staple to the wood strip along the bottom edge.

3.8 Reinstall all trim, panels, or handrails that were removed in Step 3.2, using the original fasteners.

4 Pad Replacement For a 2/3 Seat Assembly:

WARNING ***The 2/3 Seat Pad Assembly must be installed correctly to comply with FMVSS 222 S5.3.2 Leg Protection Zone.***

4.1 Remove the metal trim along the bottom of the back cover, and the lower panel.

4.2 Carefully remove the staples that atach the cover to the frame along the bottom edge, taking care not to damage the Cover.

4.3 Remove the Cover and retain it for reinstallation.

4.4 Remove and discard the incorrect Pad Assembly.

4.5 Install a new Pad Assembly, with the the rigid foam sections toward the rear of the bus.

4.6 Reinstall the Cover. Pull the Cover tightly and staple to the wood strip along the bottom edge.

4.7 Reinstall the trim that was removed in Step 4.1, using the original fasteners.

PARTS

PART NUMBER	QUANTITY	DESCRIPTION
00005525	As Required	PAD,BARRIER, 36.00, GM, LH, OFFSET LEG
00005526	As Required	PAD,BARRIER,36.00, GM, RH, OFFSET LEG
00005527	As Required	PAD, BARRIER, 36.00, HI-BACK, LH, OFFSET LEG
00005528	As Required	PAD, BARRIER, 36.00, HI-BACK, RH, OFFSET LEG
00005531	As Required	PAD, BARRIER, 39.00, HI-BACK, LH, OFFSET LEG
00005532	As Required	PAD, BARRIER, 45.00, HI-BACK, LH, OFFSET LEG
00005533	As Required	PAD, BARRIER, 39.00, HI-BACK, RH, OFFSET LEG
00005534	As Required	PAD, BARRIER, 39.00, GM, LH, OFFSET LEG
00005535	As Required	PAD, BARRIER, 39.00, GM, RH, OFFSET LEG
00005536	As Required	PAD, BARRIER, 45.00, GM, LH, OFFSET LEG
00928416	As Required	PAD, SEAT BACK, 2/3, RH
00949057	As Required	PAD, SEAT BACK, 2/3, LH, 39, SBTF
00114324	As Required	PAD, SEAT, HIGH BACK, 2/3, 30-39, RH
00114323	As Required	PAD, SEAT, HIGH BACK, 2/3, 30-39, LH

Table of Contents

BLUE BIRD

R10SL

DATE: **SEPTEMBER 24, 2010**

TO: **U.S. DEALERS**

SUBJECT: **RECALL R10SL** **STARTER CABLE AND ENGINE WIRING HARNESS MAY CONTACT ENGINE FAN HUB**

Dear Blue Bird Dealer:

This notice is sent to you in accordance with the requirements of the National Traffic and Motor Vehicle Safety Act.

Blue Bird has decided that a defect which relates to motor vehicle safety exists on certain 2007-2011 model year All American front engine school and non school buses manufactured from May 26, 2006 through August 07, 2010 and certain 2007 model year Commercial Series front engine non school buses manufactured from May 16, 2007 through March 14, 2008.

On the subject buses, an incorrect combination of flat washer and serrated nut may have been installed on the bolt that secures the starter cable and engine wiring harness retaining clamp to its attaching bracket at front of engine above engine cooling fan. The presence of the flat washer could prevent the serrated nut from locking against the attaching bracket, and over time, cause the serrated nut to loosen allowing the starter cable and main engine wiring harness to fall and contact the engine fan hub while in operation. If the starter cable or engine wiring harness contacts the engine fan hub while the fan is in operation, the cable and/or harness covering may abrade which could result in a direct short. A direct short could potentially result in a vehicle fire.

Blue Bird is conducting a recall to correct this defect. Buses with this defect must be modified according to the enclosed instructions for Recall R10SL.

If our records indicate affected buses were delivered in your service area, a printout identifying affected buses is enclosed. **Dealers should verify correct owners and assure that complete shipping addresses are provided for each listed vehicle.**

If you have in your possession or have sold a bus that was purchased from another dealer that may be affected by this recall, please notify me at 478-822-2242.

Labor time to install new locknuts and flat washers and inspect the routing of the starter cable and engine wiring harness is 0.5 hrs (30 minutes) per bus.

BLUE BIRD BODY COMPANY
P.O. Box 937 – 402 Blue Bird Blvd – Fort Valley, Georgia – (478) 825-2021

Replacement locknuts and flat washers must be ordered through Blue Bird Recall Administration. You will need to provide body number(s) and a UPS shipping address.

Replacement starter cables and engine wiring harnesses, if needed, must be ordered through Recall Administration. You will need to provide body number(s) and a UPS shipping address.

Warranty applications for labor reimbursement may be submitted to Blue Bird iWarranty (Campaigns/Claims).

Federal law requires that any vehicle lessor receiving this recall notice must forward a copy of this notice to the lessee within ten days.

It is a violation of Federal law for a dealer to deliver a new motor vehicle covered by this recall under a sale or lease until the defect is remedied. Therefore, dealers must complete modifications/repairs on units in their inventory before delivering to the final owner. Reference Blue Bird Body Company Distributor Memo No. 42-92.

Questions regarding this recall campaign should be directed to me at (478) 822-2242.

Sincerely,

Bill Coleman

Bill Coleman
Corporate Recall Administrator
Blue Bird Corporation

BLUE BIRD

R10SL

September 24, 2010

Dear Blue Bird Owner:

This notice is sent to you in accordance with the requirements of the National Traffic and Motor Vehicle Safety Act.

Blue Bird has decided that a defect which relates to motor vehicle safety exists on certain 2007-2011 model year All American front engine school and non school buses manufactured from May 26, 2006 through August 07, 2010 and certain 2007 model year Commercial Series front engine non school buses manufactured from May 16, 2007 through March 14, 2008.

On the subject buses, an incorrect combination of flat washer and serrated nut may have been installed on the bolt that secures the starter cable and engine wiring harness retaining clamp to its attaching bracket at the front of the engine above the engine cooling fan. The presence of the flat washer could prevent the serrated nut from locking against the attaching bracket, and over time, cause the serrated nut to loosen allowing the starter cable and engine wiring harness to fall and contact the engine fan hub while in operation. If the starter cable or engine wiring harness contacts the engine fan hub while the fan is in operation, the cable and/or harness covering may abrade which could result in a direct short. A direct short could potentially result in a vehicle fire.

Blue Bird is conducting a recall to correct this defect. Buses with this defect must be modified according to the enclosed instructions for Recall R10SL.

You may contact your Blue Bird dealer to arrange to have this recall performed. Or, if you prefer, you may perform this recall yourself or have a qualified repair facility convenient to you perform this recall. A qualified technician should perform this recall.

Your Blue Bird bus(es) affected by this recall are identified by body serial number(s) on the enclosed reply sheets. If you no longer own the subject bus(es), please complete the sold to section of the **labor reimbursement** sheet and return to Blue Bird in the enclosed pink postage prepaid envelope.

To receive replacement locknuts and washers to correct this condition, you must return the yellow recall reply sheet to Blue Bird in the pink, self addressed, postage prepaid envelope. Be sure to provide a valid shipping address as UPS does not deliver to P.O. Boxes.

BLUE BIRD BODY COMPANY
P.O. Box 937 – 402 Blue Bird Blvd – Fort Valley, Georgia – (478) 825-2021

Labor time to install new locknuts and flat washers and inspect the routing of the starter cable and engine wiring harness is 0.5 hrs (30 minutes) per bus.

Reimbursement for labor may be obtained by completing the **pink recall request for reimbursement sheet** provided and returning it to Blue Bird in the enclosed **pink** postage prepaid envelope. If reimbursement is not desired, please complete the bottom portion of the pink reply sheet and return to Blue Bird in the enclosed pink reply envelope so we may update our records to show recall R10SL has been completed.

If the modifications directed by this notification were performed on your bus prior to the receipt of this recall notification, complete and sign the recall reply sheet and attached a copy of the work order/invoice. Mail the documents in the **pink** self-addressed postage paid envelope included with the recall notification to Blue Bird for warranty consideration. Reimbursements will be made in accordance with the requirements of the National Highway Transportation Safety Act, Title 49 Code of Federal Regulations, Parts 573 and 577.

Federal law requires that any vehicle lessor receiving this recall notice must forward a copy of this notice to the lessee within ten days.

If Blue Bird Body Company should fail to or is unable to remedy this condition without charge to you, you may contact:

ADMINISTRATOR
NATIONAL HIGHWAY TRAFFIC SAFETY ADMINISTRATION
1200 NEW JERSEY AVENUE, SE
WASHINGTON, D.C. 20590

Or, you may call The National Highway Traffic Safety Administration toll free at:

1-888-327-4236
TTY 1-800-424-9153

Or, go to: HTTP:/WWW.SAFERCAR.GOV

Questions regarding this recall campaign should be directed to me at (478) 822-2242.

Thank you,

Bill Coleman

Bill Coleman
Corporate Recall Administrator
BLUE BIRD CORPORATION

Starter Cable and Wiring Harness May Contact Engine Fan Hub

RECALL

Models Affected: 2007 – 2011 All American (A3FE) and Commercial Series (C3FE), and 2010-2011 All American (D3FE) equipped with Cummins ISB Engines

ISSUE

The ¼" serrated flange head nuts that secures the starter cable and engine wiring harness to the mounting brackets located on the front of the engine may become loose and fall off allowing the cable and harness to contact engine fan drive belt or the fan clutch assembly.

CORRECTIVE ACTION

Replace ¼" serrated head flange nut with a ¼" locking nut, add a flat washer and inspect starter cable and engine wiring harness.

PROCEDURE

WARNING: Always follow all Federal, State, Local and Shop safety standards and use proper safety equipment when performing these procedures. Thoroughly read and understand all instructions before performing this procedure.

CAUTION: Engine MUST be at ambient temperature before performing these procedures.

All American (A3FE and C3FE)

1. Park bus on a level surface, applying parking brake, switch engine off, remove ignition key and chock wheels. Disconnect batteries. ***Always remove negative cable first.***

2. Open engine hood and disconnect hood stop cable from inside cover assembly by removing a ½ x 24 machine screw and 10-24 hex locknut.

Remove machine screw and locknut

3. Locate the two latches on each side and one latch at the rear and release the latches.

4. Remove cover assembly and move it away from the engine to access the front fan area.

R10SL

RECALL CAMPAIGN

5 Inspect the starter cable and wiring harness from the right side of the engine, across front of engine to left side of engine for any chaffing, rubbing or damage. If starter cable and wiring harness shows any evidence of damage, contact Blue Bird Recall Administration.

Area of Left side support Bracket, See photos in step 8

Area of Right side support Bracket, See photo in Step 7

6 One starter cable and wiring harness support is located on the right side of the engine between the alternator and engine fan.

7 Remove and discard the ¼" serrated nut (and flat washer if installed). Install the new ¼" locknut (0145847) and flat washer (01247709) provided. Torque nut to 60-85 in. lbs. Note: two complete threads must extend completely through the nut.

Replace with new locknut and flat washer (Note: new locknut shown)

8. The second starter cable and wiring harness support is located on the front left side of the engine block.

9. Remove and discard the ¼" serrated nut (and flat washer if installed). Install the new ¼" locknut (0145847) and flat washer (01247709) provided. Torque nut to 60-85 in. lbs. Note: two complete threads must extend completely through the nut.

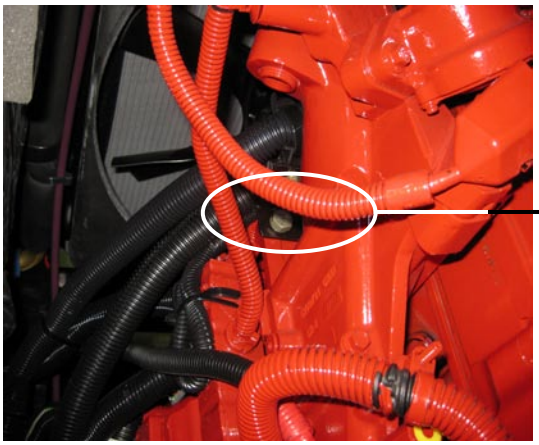

Left Side support

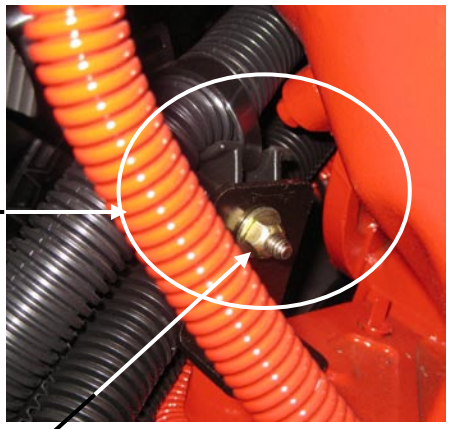

Replace with new locknut and flat washer (Note: New locknut shown)

10. Reinstall the engine cover assembly with the latches. After the latches have been snapped in place, reattach the cable on the inside cover assembly with ½ x 24 machine screw and 10-24 hex locknut removed in earlier step. Reconnect the batteries.

    Caution: When reconnecting the batteries, connect the negative last.

11. Place bus back in service.

All American (D3FE)

1. Park bus on a level surface, applying parking brake, switch engine off, remove ignition key and chock wheels. Disconnect batteries. ***Always remove negative cable first.***

2. To remove engine cover assembly to access front of engine:
    a. Remove cup holder by removing the Phillip head screws on the front of center console.
    b. Remove the PA microphone if equipped.
    c. Pull to release the rubber handle latch anchor located at the right hand lower front wall of the engine cover assembly.
    d. Open hood and locate the four latches on the inside of hood. One is located on the driver's side toward the front, one on each side and one at rear center. Release these latches and remove engine cover assembly for access to front of engine.

3. Inspect the starter cable and wiring harness from the right side of engine, across front of engine to left side of engine for any chaffing, rubbing or damage. If starter cable and wiring harness shows any evidence of damage, contact Blue Bird Recall Administration.

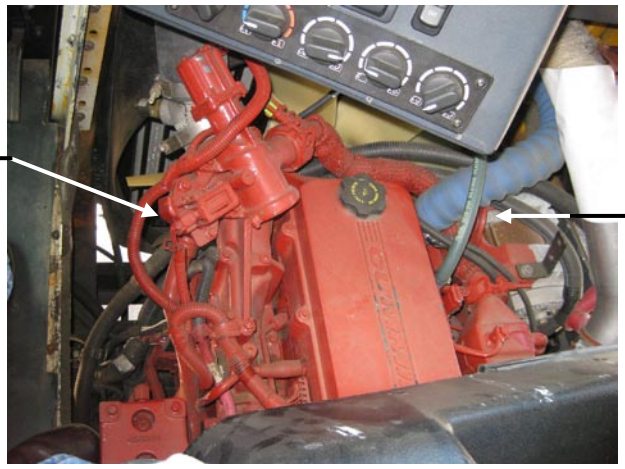

4 One starter cable and wiring harness support is located on the right side of the engine between the alternator and engine fan.

5. Remove and discard the ¼" serrated nut (and flat washer if installed). Install the new ¼" locknut (0145847) and flat washer (01247709) provided. Torque nut to 60-85 in. lbs. Note: two complete threads must extend completely through the nut.

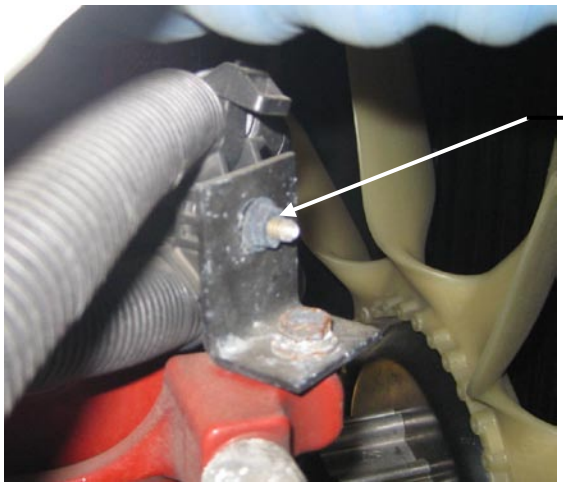

6. The second starter cable and wiring harness support is located on the front left side of the engine block.

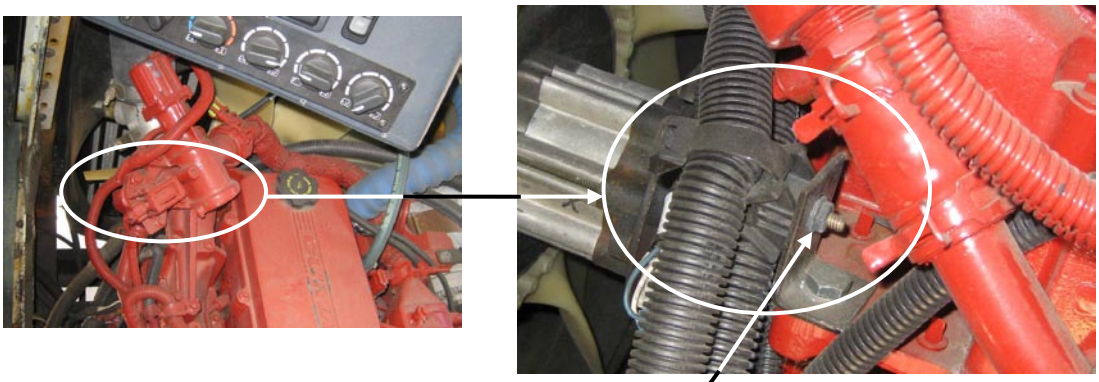

Left Side Support

Replace serrated nut (shown) with locknut and flat washer

7 Remove and discard the ¼" serrated nut (and flat washer if installed). Install the new ¼" locknut (0145847) and flat washer (01247709) provided. Torque nut to 60-85 in. lbs. Note: two complete threads must extend completely through the nut.

8. Reinstall the engine cover assembly by reversing the steps above. Reconnect the batteries.

Caution: When reconnecting the batteries, connect the negative cable last.

9. Place bus back in service.

PARTS LIST

PART NUMBER	DESCRIPTION	QUANITY
01455947	Nut, Hex Head, ¼ -20, Locking, Nylon Insert	2
01247709	Washer, Flat, 17/64 ID X 5/8 OD	2

BLUE BIRD

R11SZ

DATE: **JUNE 23, 2011**

TO: **U.S. DEALERS**

SUBJECT: **RECALL R11SZ** **BRAKE ABS MALFUNCTION INDICATOR LIGHT NONCOMPLIANCE**

This notice is sent to you in accordance with the requirements of the National Traffic and Motor Vehicle Safety Act.

Blue Bird Body Company has decided that certain 2007 through 2011 model year "Vision" conventional model school buses manufactured from October 23, 2006 through December 09, 2009 fail to conform to the requirements of Federal Motor Vehicle Safety Standard (FMVSS) 105 "Hydraulic and Electric Brake Systems" Section 5.3.1for buses equipped with hydraulic brakes and (FMVSS) 121 "Air Brake Systems" Section 5.1.6.2 for buses equipped with air brakes.

On the subject buses, the dash instrument panel ABS malfunction indicator light does not illuminate when the main ABS module is disconnected. In the event the ABS circuit is disconnected from the main ABS module, the bus operator would be unaware of the failure of the ABS braking system and the associated nonfunctioning ABS braking which could increase the risk of a crash in certain circumstances and could potentially result in property damage and/or personal injury.

On buses manufactured with hydraulic brakes and equipped with the cab mounted (behind the PDU cover) "D" version of the Wabco hydraulic brake ABS module the main wiring circuit must be rewired. Buses with Type "D" Wabco ABS modules were manufactured from November 02, 2006 through December 17, 2008. See attached R11SZ instructions modification procedures for buses equipped with Type "D" ABS modules.

Note: The instrument panel on buses equipped with Type "D" Wabco ABS modules **will not** need to be reprogrammed.

All other buses subject to Recall R11SZ will require the Dealer to reprogram the Stoneridge instrument panel with the appropriate software as required. The software for reprogramming the dash will be available on the Blue Bird Customer Service website within the next 30 days. See attached R11SZ instructions for Stoneridge instrument panel reprogramming procedures. **Owners are being directed to contact their dealer to have Recall R11SZ performed.**

BLUE BIRD BODY COMPANY
P.O. Box 937 – 402 Blue Bird Blvd – Fort Valley, Georgia – (478) 825-2021

Labor time to rewire the type "D" ABS module on subject buses equipped with hydraulic brakes and manufactured from November 02, 2006 through December 17, 2008 is 0.2 hours per bus.

Labor time to install the appropriate software on all other buses is 0.2 hours per bus.

Dealers may submit campaign claims in Blue Bird iWarranty. **Claims for buses with Type D Wabco ECUs will be filed under campaign "R11SZ Type D" in iWarranty.**

If our records indicate affected buses were delivered in your service area, a printout identifying affected buses is enclosed. **Dealers should verify correct owners and assure that complete mailing addresses are provided for each listed vehicle.**

If you have in your possession or have sold a bus that was purchased from another dealer that may be affected by this recall, please notify me at 478-822-2242.

Federal law requires that any vehicle lessor receiving this recall notice must forward a copy of this notice to the lessee within ten days.

Dealers are reminded of their responsibilities under section 154 of The National Traffic and Motor Vehicle Safety Act of 1991. Dealers are required to complete modifications on units in their inventory before delivering to the final owner. Reference Blue Bird Body Company Distributor Memo No. 42-92.

Questions regarding this recall campaign should be directed to me at (478) 822-2242.

Thank you,

Bill Coleman

Bill Coleman
Corporate Recall Administrator
Blue Bird Corporation

BLUE BIRD

R11SZ

June 23, 2011

Dear Blue Bird Owner:

This notice is sent to you in accordance with the requirements of the National Traffic and Motor Vehicle Safety Act.

Blue Bird Body Company has decided that certain 2007 through 2011 model year "Vision" model conventional school and non-school buses manufactured from October 23, 2006 through December 09, 2009 fail to conform to Federal Motor Vehicle Safety Standard (FMVSS No. 105) "Hydraulic and Electric Brake Systems" for buses equipped with hydraulic brakes and (FMVSS No. 121) "Air Brake System" for buses equipped with air brakes.

On the subject buses, the dash instrument panel ABS malfunction indicator light does not illuminate when the ABS circuit is disconnected at the main ABS module. In the event the ABS circuit is disconnected from the main ABS module, the bus operator would be unaware of the failure of the ABS braking system and the associated nonfunctioning ABS braking, which could increase the risk of a crash in certain circumstances and could potentially result in property damage and/or personal injury. Parts and labor required to complete Recall R11SZ will be provided at no cost to you.

Your Blue Bird bus(es) affected by this recall are identified by body serial number(s) on the enclosed cover sheet(s). The cover sheets will indicate the type of ABS module installed on the buses listed.

If you no longer own the subject bus(es), please complete the appropriate section of the cover sheet and return to Blue Bird in the enclosed pink postage prepaid envelope.

If your bus is equipped with hydraulic brakes and was manufactured between November 02, 2006 and December 17, 2008 and equipped with the Wabco Type "D" ABS module you will need to have the ABS module wiring circuit only modified according to the attached recall instructions. These buses will not need to be reprogrammed. You may contact your Blue Bird dealer to have this modification performed or you may perform this modification yourself. You may also have this modification performed by a reputable local repair facility convenient to you. A qualified technician must perform the wiring circuit modification.

Reimbursement for labor for performing the wiring modification on the Wabco Type D ECU may be obtained by completing the **"Completed Reply/Labor Reimbursement"** sheet provided and returning it to Blue Bird in the enclosed **pink** postage prepaid envelope.

BLUE BIRD BODY COMPANY
P.O. Box 937 – 402 Blue Bird Blvd – Fort Valley, Georgia – (478) 825-2021

If your bus is equipped with air brakes or equipped with hydraulic brakes **and not** manufactured within the dates for buses equipped with Wabco Type D ECU's, you will need to schedule an appointment with your dealer to have the dash instrument panel reprogrammed. Your Blue Bird dealer must perform the software update. The software needed to correct this condition on these buses is anticipated to be available to your Blue Bird dealer within the next 30 days. Reprogramming the dash instrument panel will be performed by your Blue Bird dealer at no charge to you. A qualified technician must perform the software update.

If the modifications directed by this notification were performed on your bus prior to the receipt of this recall notification, complete and sign the recall reply sheet and attached a copy of the work order/invoice. Mail the documents in the **pink** self-addressed postage paid envelope included with the recall notification to Blue Bird for warranty consideration. Reimbursements will be made in accordance with the requirements of the National Highway Transportation Safety Act, Title 49 Code of Federal Regulations, Parts 573 and 577.

Federal law requires that any vehicle lessor receiving this recall notice must forward a copy of this notice to the lessee within ten days.

If Blue Bird Body Company should fail to or is unable to remedy this condition without charge to you, you may contact:

ADMINISTRATOR
NATIONAL HIGHWAY TRAFFIC SAFETY ADMINISTRATION
1200 NEW JERSEY AVENUE, SE
WASHINGTON, D.C. 20590

Or, you may call The National Highway Traffic Safety Administration toll free at:

1-888-327-4236
TTY 1-800-424-9153

Or, go to: HTTP:/WWW.SAFERCAR.GOV

Questions regarding this recall campaign should be directed to me at (478) 822-2242.

Thank you,

Bill Coleman

Bill Coleman
Corporate Recall Administrator
Blue Bird Corporation

Stoneridge Instrument Cluster ABS Malfunction Indicator Noncompliance RECALL

Models Affected: 2007-2011 Model Year "Vision" Buses

ISSUE

Under certain conditions the anti-lock brake (ABS) malfunction indicator may not illuminate when required.

CORRECTIVE ACTION

Affected units will require corrective action based on instrumentation software version and ABS control module type. Complete the appropriate corrective action procedure below.

SOFTWARE UPDATE PROCEDURE

WARNING: Always follow all Federal, State, Local, and Shop safety standards and use proper safety equipment when performing these procedures. NOTE: Software update procedure is NOT applicable to buses with cab mounted "D" version ABS ECU's.

Step 1. Set the bus parking brake.

Step 2. Using steering column stalk switch and instrument cluster diagnostics menu verify current software version displayed under part number menu.

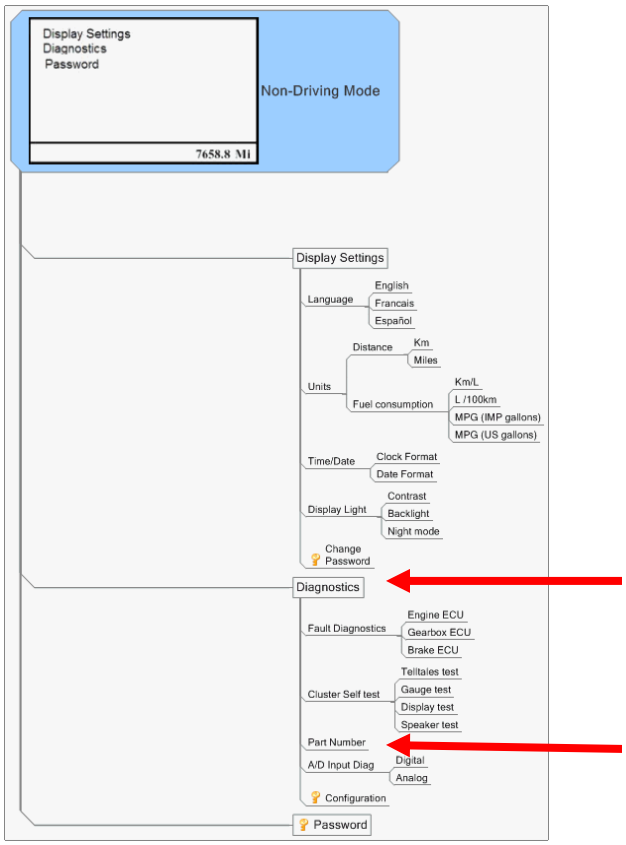

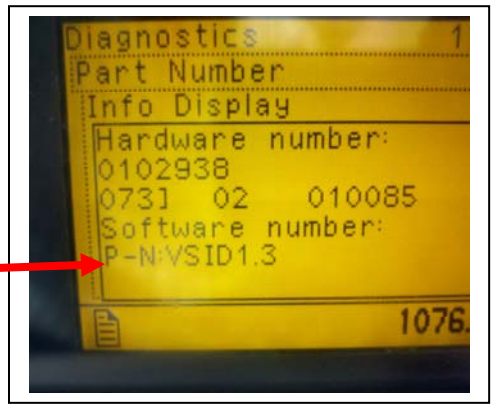

R11SZ

RECALL CAMPAIGN

Step 3. On units with version 1.4 or lower software installed flash the instrument cluster with version 4.11 software provided. On units with version 1.5 or higher installed flash the instrument cluster with version 4.1 software provided.

Step 4. Connect Kvaser CAN interface cables (supplied in kit 00114694) to the computers USB port and the Bus diagnostic connector located below the driver side dash area.

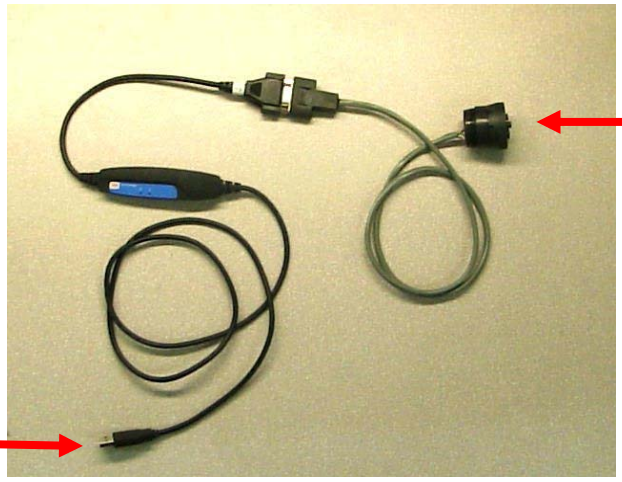

Step 5. Once everything is connected, turn ignition switch on.

Step 6. Run the Flash Tool application by double clicking the Flash Tool icon on your desktop.

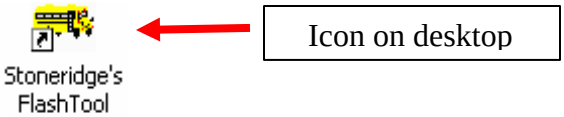

Step 7. You will see the following screen (main window):

Step 8. Click on “Open Hex File…” button

a. Select the appropriate software version hex file supplied.

Step 9. Click on “Flash!” button

a. A confirmation window will appear, click on “Flash!” button

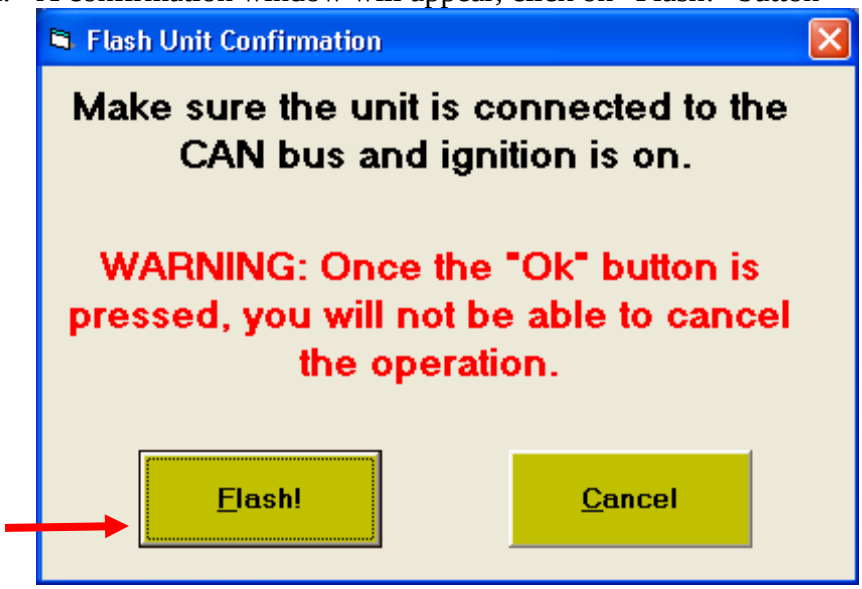

Step 10. Wait for the cluster unit to automatically restart. Once the flash process has started there is no way to abort. The status screen will display “passed Operation successful!” when process is complete. DO NOT switch ignition off while in process.

Step 11. Using steering column stalk switch and instrument cluster diagnostics menu verify software version displayed under part number menu is updated version level you installed.

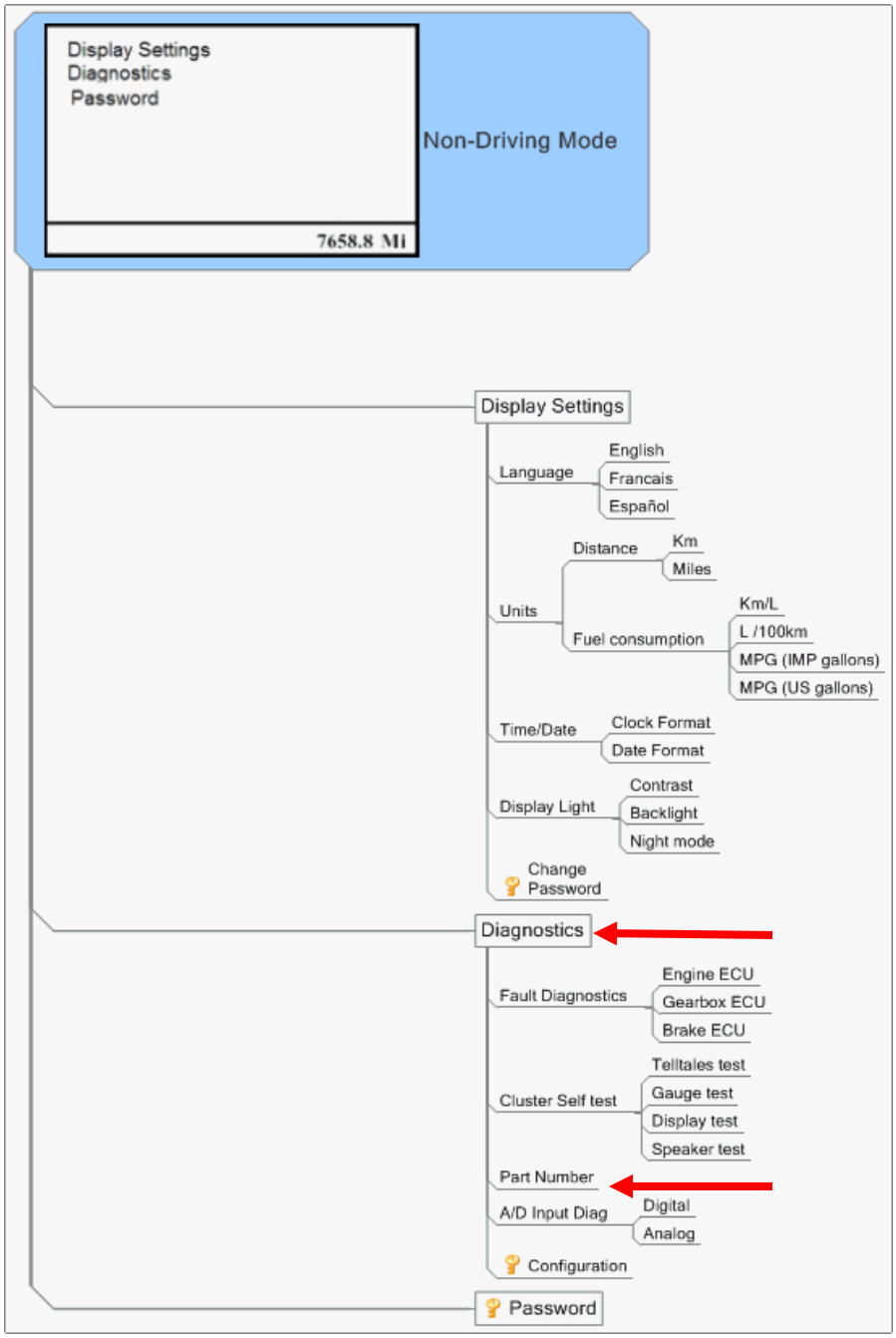

Step 12. Using steering column stalk switch and instrument cluster configuration menu verify the “ABS WL Source” is set for “J1939”. Access to the configuration option is protected and requires the user to provide the access code via the “**Password”** option to enable it. Enter the password “2290” first. It is necessary to execute an ignition cycle (OFF/ON), after revising desired parameters, for EE parameter changes to take effect.

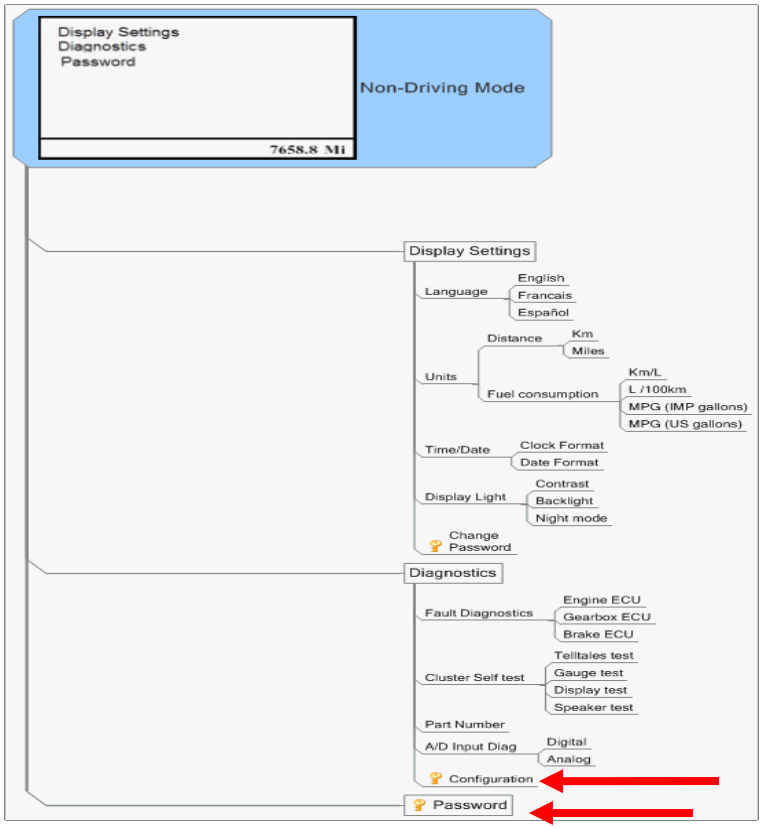

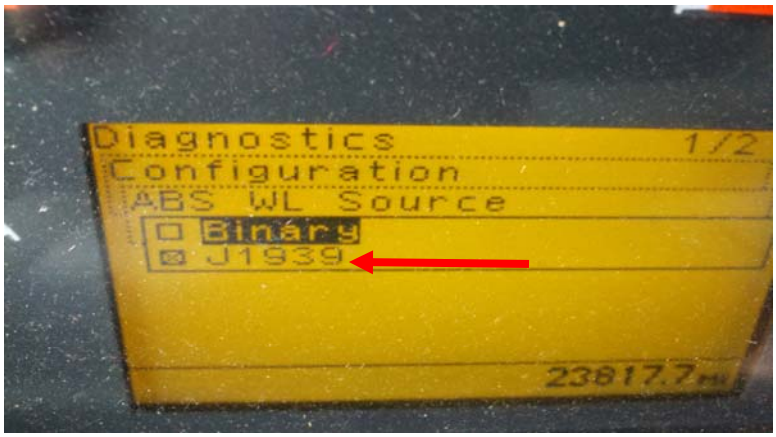

Step 13. Instrument cluster software update is complete.

WIRING UPDATE PROCEDURE

WARNING: Always follow all Federal, State, And Local and Shop safety standards and use proper safety equipment when performing these procedures. Observe all safety precautions to secure the bus from rolling. NOTE: Wiring update procedure is ONLY applicable to buses with cab mounted "D" version ABS ECU's.

1. Park the bus on a level surface, apply parking brakes, turn off engine and remove keys. Chock wheels.
2. Disconnect batteries – Note; When disconnecting the batteries, remove the negative cable first.
3. Remove chassis Power Distribution Unit (PDU) cover by unscrewing two thumb screws. The thumb screws are located at the top of each side of the cover.

Thumb screws. Cover is located lower center of dash.

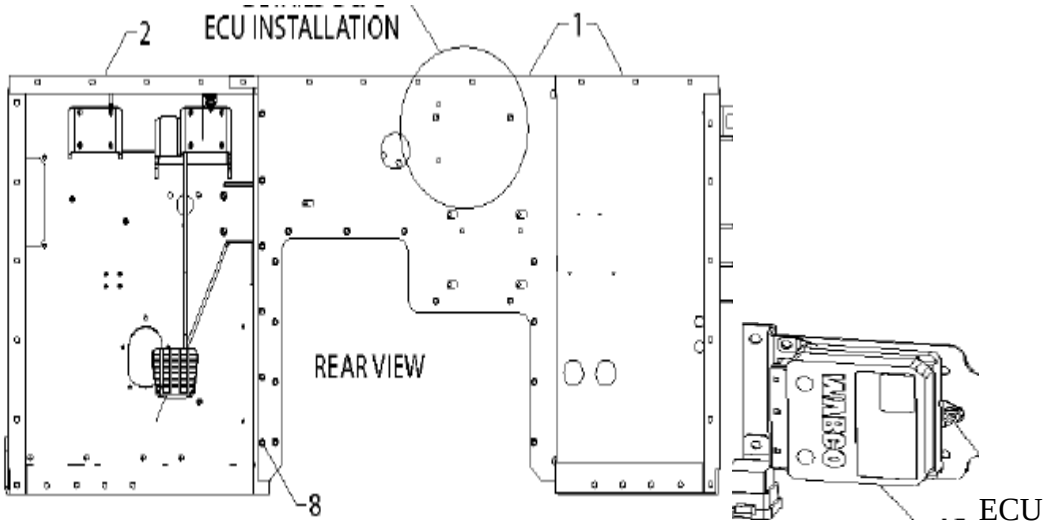

WIRING UPDATE PROCEDURE

4. Locate connector C504 in PDU (detail shown below). Cut and remove connector C504 from the PDU and ABS harness.

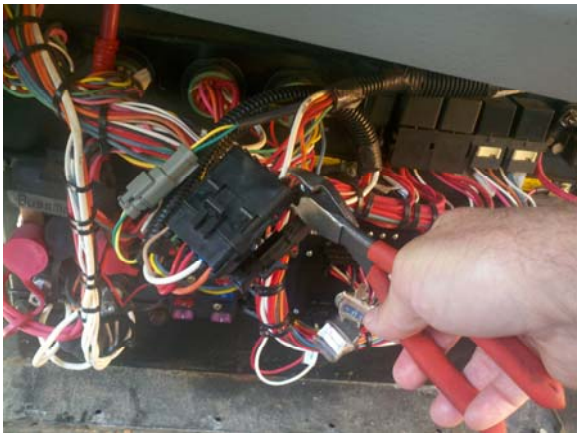

5. Splice each circuit from previous step to the corresponding circuit. Use appropriate terminal as listed below.

   "ABS LGT", "ABS ACTIVE", circuit use terminal # 00005840.
   "ABS GND", "ABS BATT", "MOD PUMP BATT", circuit use terminal # 0036508.
   "ABS IGN" circuit use terminal # 00036507.

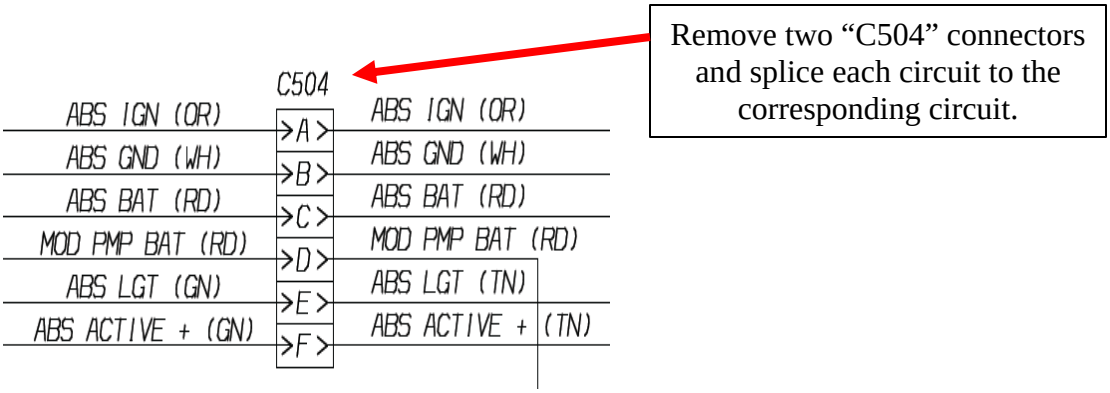

6. Wiring update procedure is complete.

PARTS

PART NUMBER	QUANTITY	DESCRIPTION
000036507	1	Terminal, Butt Conn, 14-16 GA, Sealed
000036508	3	Terminal, Butt Conn, 10-12 GA, Sealed
000005840	2	Terminal, Butt Conn, 18-22 GA, Sealed

TOOLS

PART NUMBER	DESCRIPTION
00114694	Kit, Service, Diagnostic Tool, Stoneridge

SERVICE PROCEDURE

G-11506
JULY 2011

SUBJECT: **SAFETY RECALL**
RETURN FUEL VALVE on certain BE and CE school buses built 5/27/10 thru 3/8/11 with a MaxxForce 7 engine.

DEFECT DESCRIPTION

A cap on the return fuel valve may become unsnapped allowing air to be drawn into the fuel system possibly resulting in engine hard start, no start, or stall conditions.

MODELS INVOLVED

This Safety Recall involves certain BE and CE school buses built 5/27/10 thru 3/8/11 with a MaxxForce 7 engine.

PARTS INFORMATION

Part Number	Part Description	Quantity
7085437C91	Kit, RFV and Fuel Filter	1

7085437C91 contains the following parts:

Part Number	Part Description	Quantity
1891668C94	Return Fuel Valve Assembly Kit	1
	Fuel Housing Cover Gasket	1
	Fuel O-Ring	1
	Fuel Thermal Bypass Valve Assembly	1
	M5 x 18 Torx Screw	7
	Snap Ring	1
	Instruction Sheet	1
1884207C91	Fuel Filter Elements Kit	1
	Fuel Cap Primary O-Ring	1
	Fuel Cap Secondary O-Ring	1
	Fuel Primary Element Assembly	1
	Primary Filter Assembly	1
	Instruction Sheet	1

SERVICE PROCEDURE

WARNING! PARK VEHICLE ON HARD FLAT SURFACE, TURN THE ENGINE OFF, SET THE PARKING BRAKE AND BLOCK THE WHEELS TO PREVENT THE VEHICLE FROM MOVING IN BOTH DIRECTIONS. FAILURE TO DO SO MAY RESULT IN PROPERTY DAMAGE, PERSONAL INJURY AND/OR DEATH.

WARNING! IF THE VEHICLE MUST BE RAISED, DO NOT WORK UNDER THE VEHICLE SUPPORTED ONLY BY JACKS. JACKS CAN SLIP OR FALL OVER, POTENTIALLY RESULTING IN PROPERTY DAMAGE, PERSONAL INJURY AND/OR DEATH.

WARNING! ALWAYS WEAR SAFE EYE PROTECTION WHEN PERFORMING VEHICLE MAINTENANCE. FAILURE TO DO SO MAY RESULT IN SERIOUS EYE INJURY.

WARNING! ALLOW COMPONENTS IN ENGINE COMPARTMENT TO COOL BEFORE SERVICING ENGINE OR VEHICLE. FAILURE TO DO SO MAY RESULT IN PROPERTY DAMAGE, PERSONAL INJURY AND/OR DEATH.

1. Drain the low-pressure fuel system.

   a. Clean the primary fuel filter cap, secondary fuel filter cap, and fuel filter module assembly to prevent debris entering fuel system when removing caps.

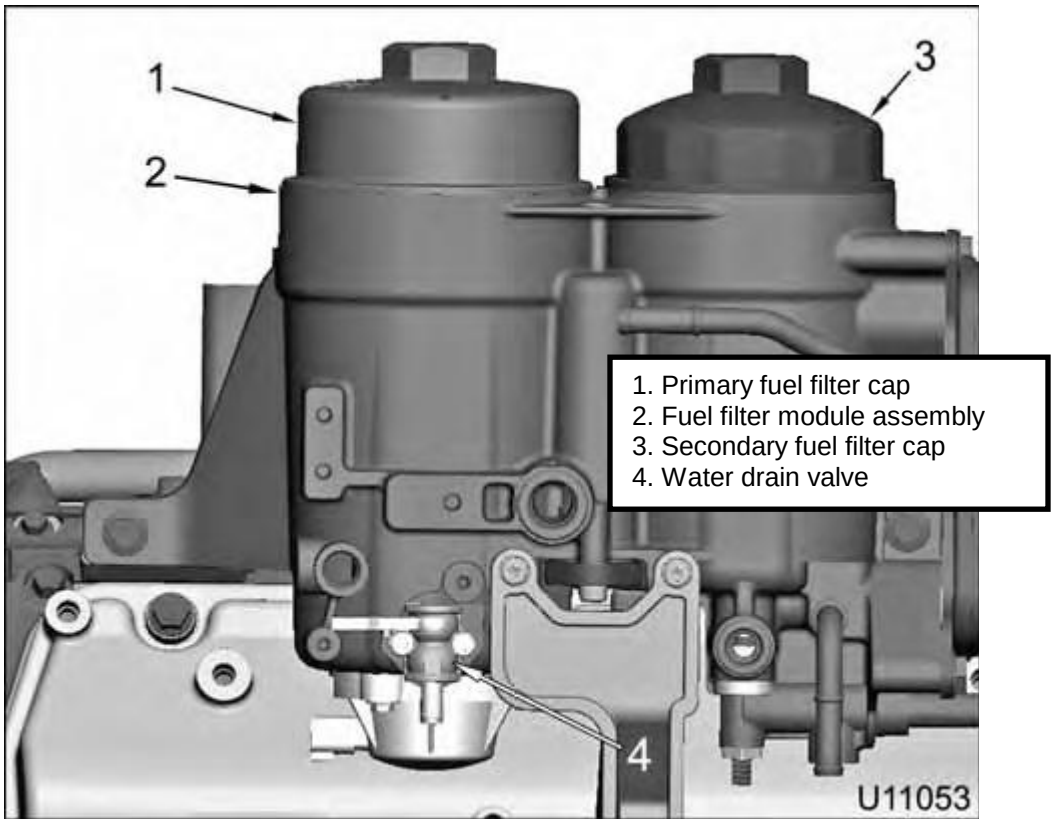

   b. Loosen the primary fuel filter cap counterclockwise three and one-half turns to vent the fuel filter module assembly.

   c. Attach a hose to the end of the water drain valve.

   d. Position a suitable container under the water drain valve and put end of hose into container.

   e. Open water drain valve and drain fuel.

   f. After fuel is drained remove container and recycle or dispose of fuel according to applicable regulations.

   g. Remove hose and close water drain valve.

   h. Turn the primary fuel filter cap clockwise to seat the cap to the fuel filter module assembly, but do not tighten to torque.

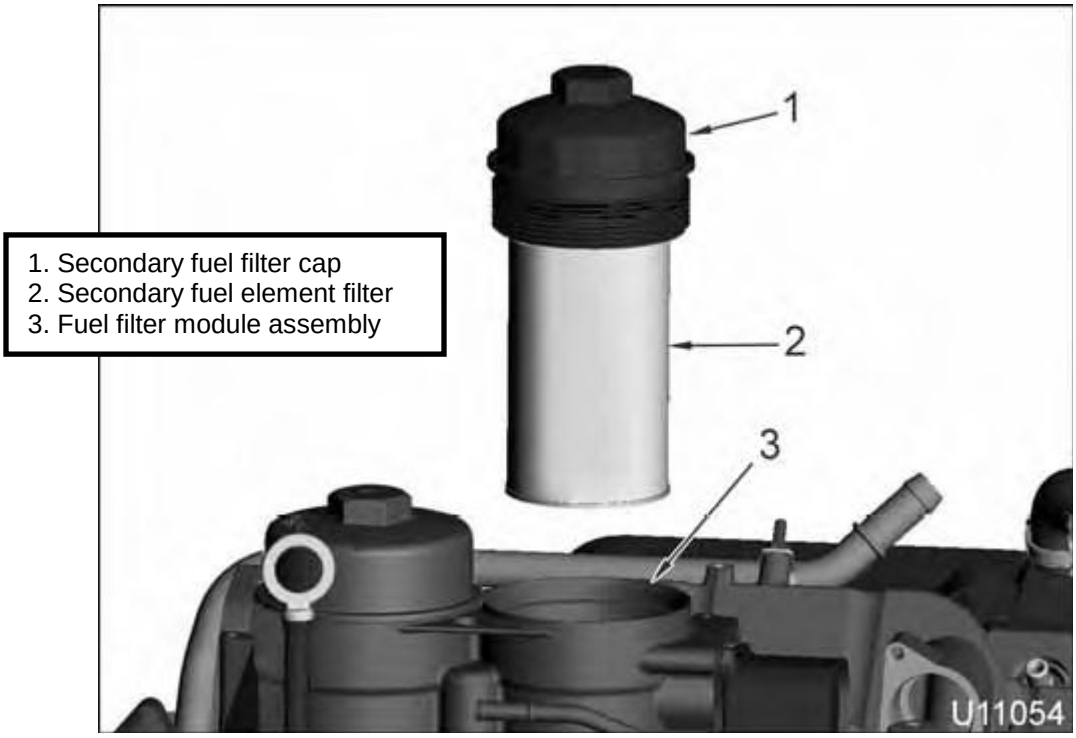

i. Remove the secondary fuel filter cap and fuel element filter to allow fuel to drain to the tank.

j. Reinstall the secondary fuel filter cap and fuel element filter to seat the cap to the fuel filter module assembly, but do not tighten to torque.

2. Install a new fuel thermal bypass valve assembly.

   a. Remove the fuel filter module housing.

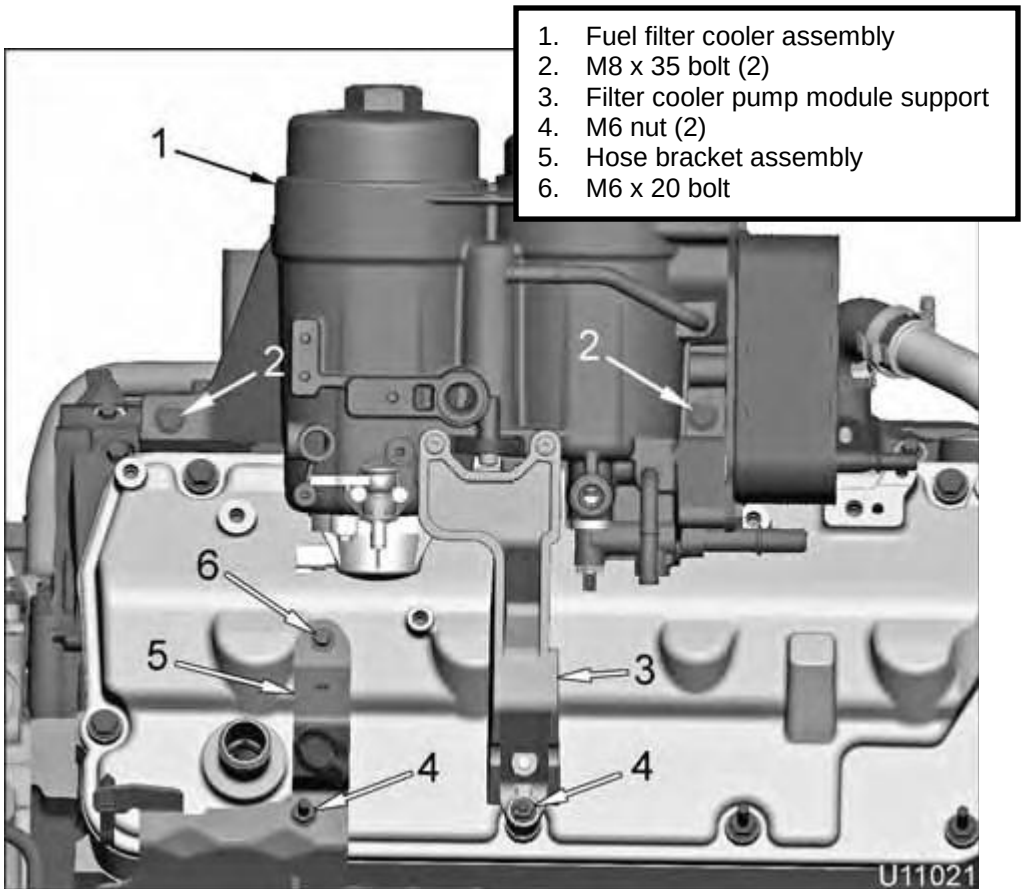

   i. Remove M6 nut from filter cooler pump module support.

   ii. Remove two M8 x 35 bolts that secure the fuel filter cooler assembly.

   iii. Remove fuel filter cooler assembly with filter cooler pump module support.

   iv. Remove M6 x 20 bolt, M6 nut, and the hose bracket assembly.

b. Remove seven M5 x 18 screws that secure the fuel housing cover to the fuel filter module housing.

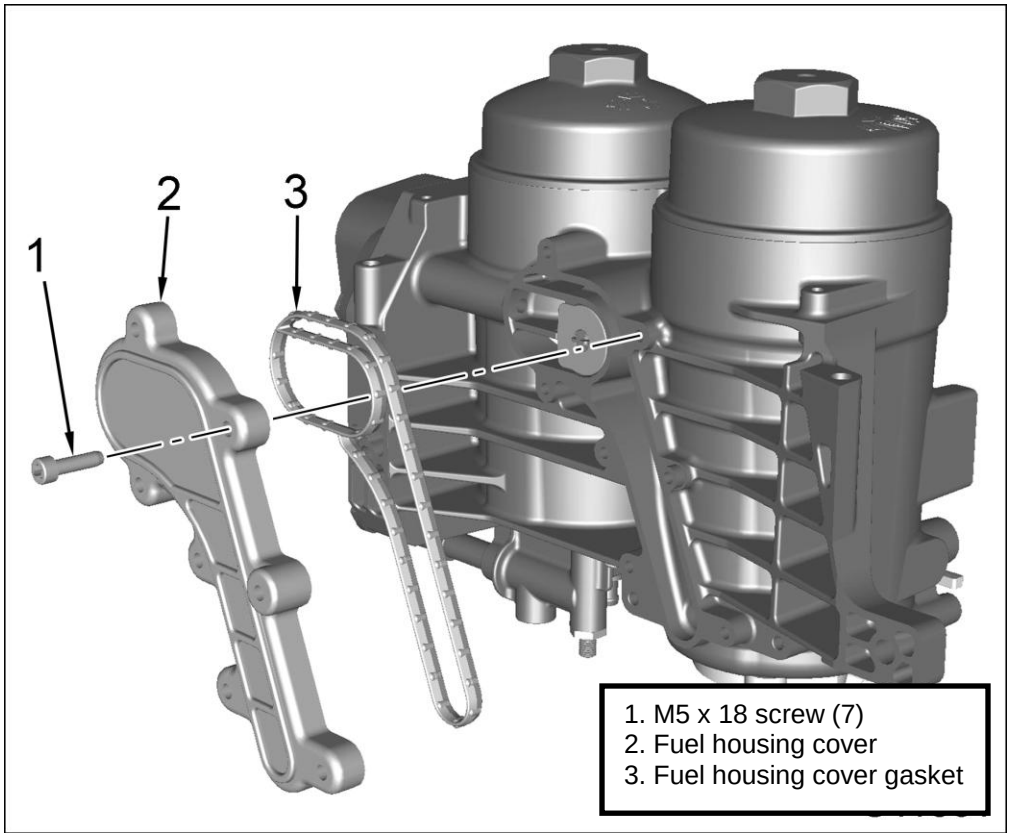

c. Remove and discard the fuel housing cover gasket.

d. Using a flat blade screw driver or needle nose pliers, remove the fuel thermal bypass valve assembly from fuel filter module housing. Care should be taken to prevent damage to the filter housing during the bypass valve removal.

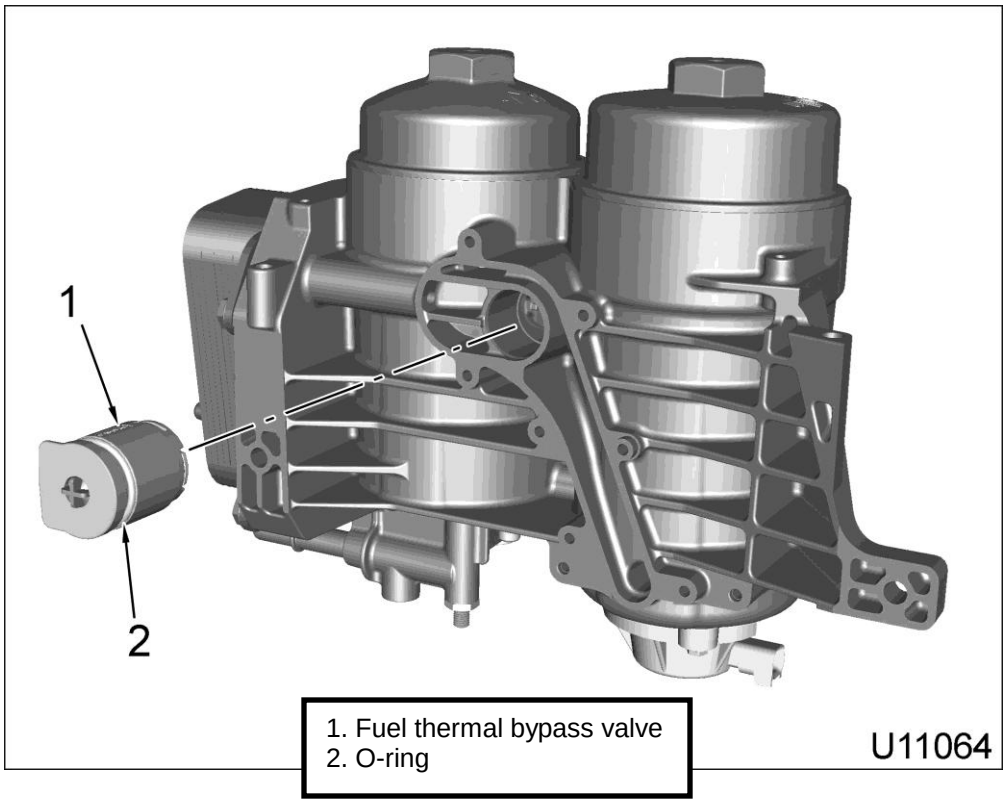

1. Fuel thermal bypass valve
2. O-ring

e. Discard the fuel thermal bypass valve assembly and fuel o-ring.

f. Use retaining ring pliers to insert snap ring into the fuel thermal bypass valve bore until the snap ring stops on the two cast ribs at 12:00 o'clock and 6:00 o'clock positions.

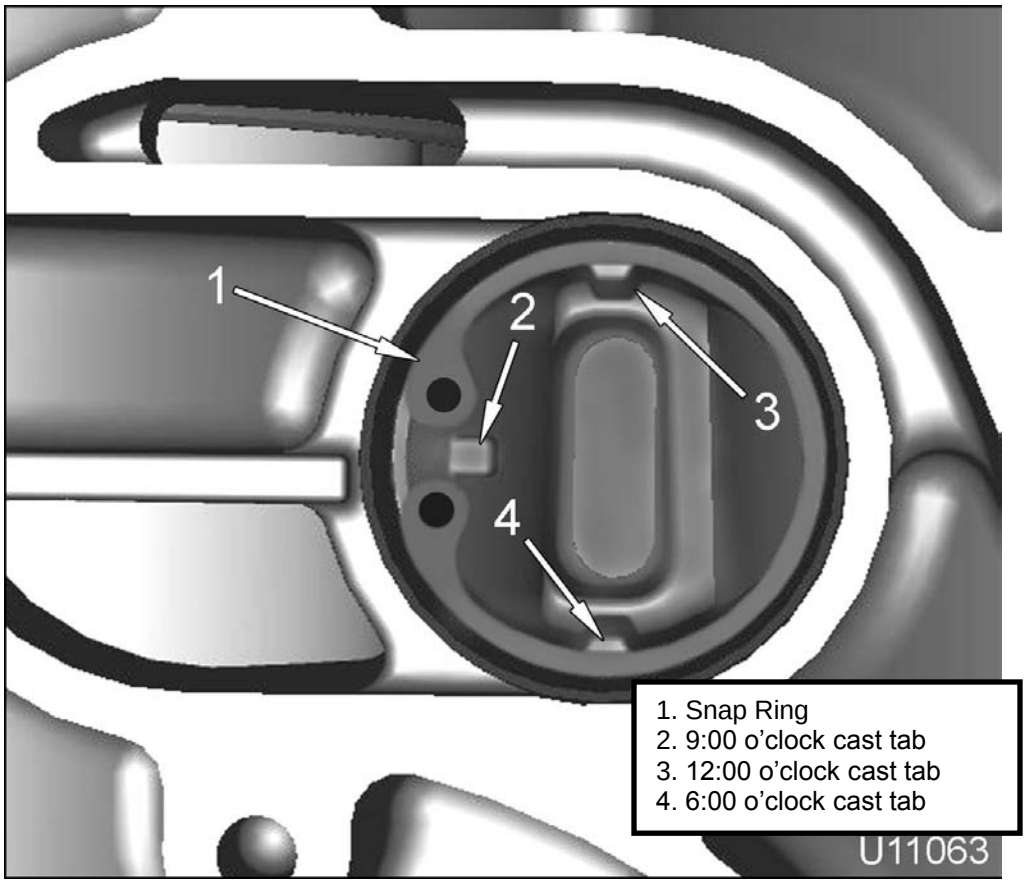

g. Center the opening of the snap ring on the cast tab at the 9:00 o'clock position.

h. Remove protective tie straps from fuel thermal bypass valve by cutting the outer tie strap first; then, slide the inner tie strap sideways off the fuel thermal bypass valve.

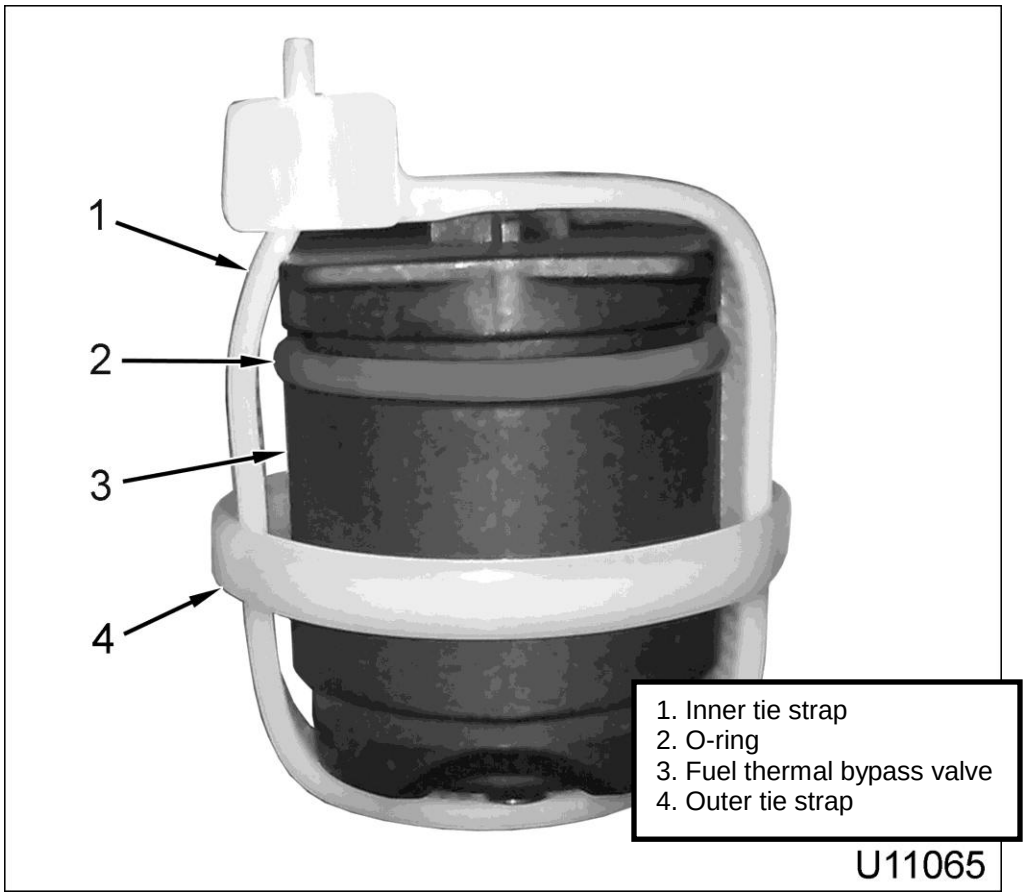

i. Lubricate new fuel o-ring with clean diesel fuel.

j. Insert new fuel thermal bypass valve assembly into valve bore until fully seated onto snap ring.

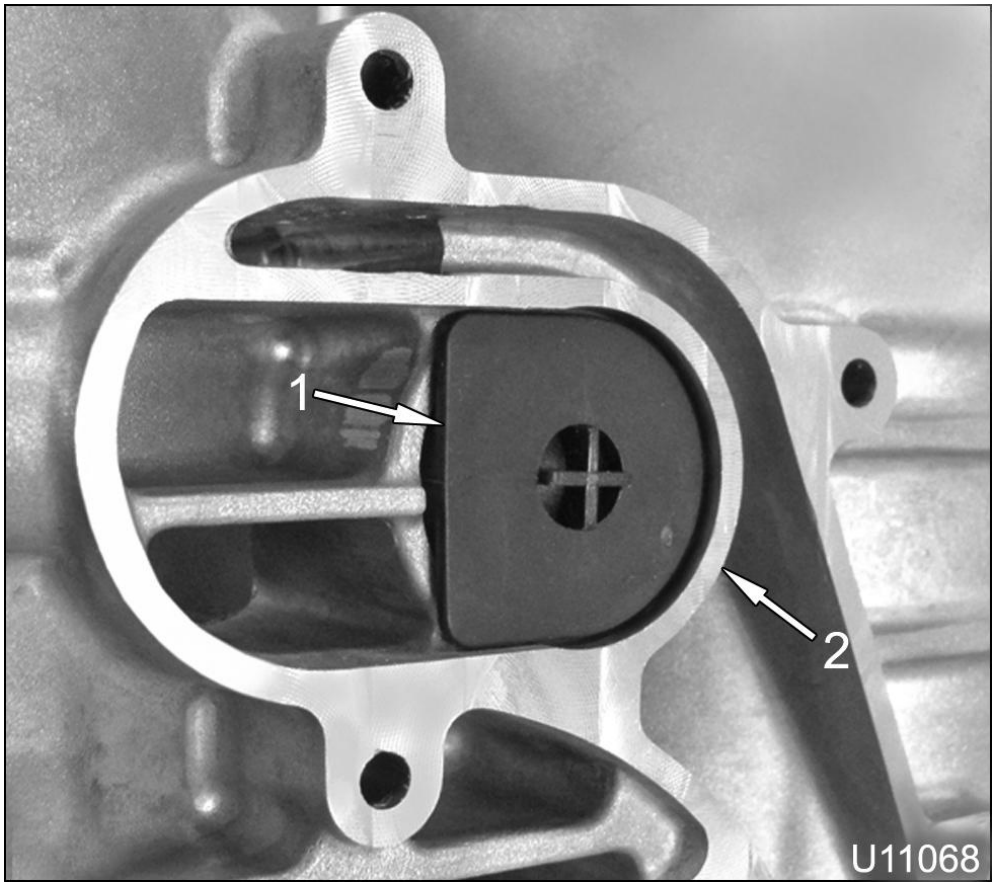

k. Install new fuel housing cover gasket, fuel housing cover, and seven M5 x 18 screws.

l. Tighten fuel housing cover screws to 5 N-m (45 lbf-in).

m. Install the fuel filter module housing.

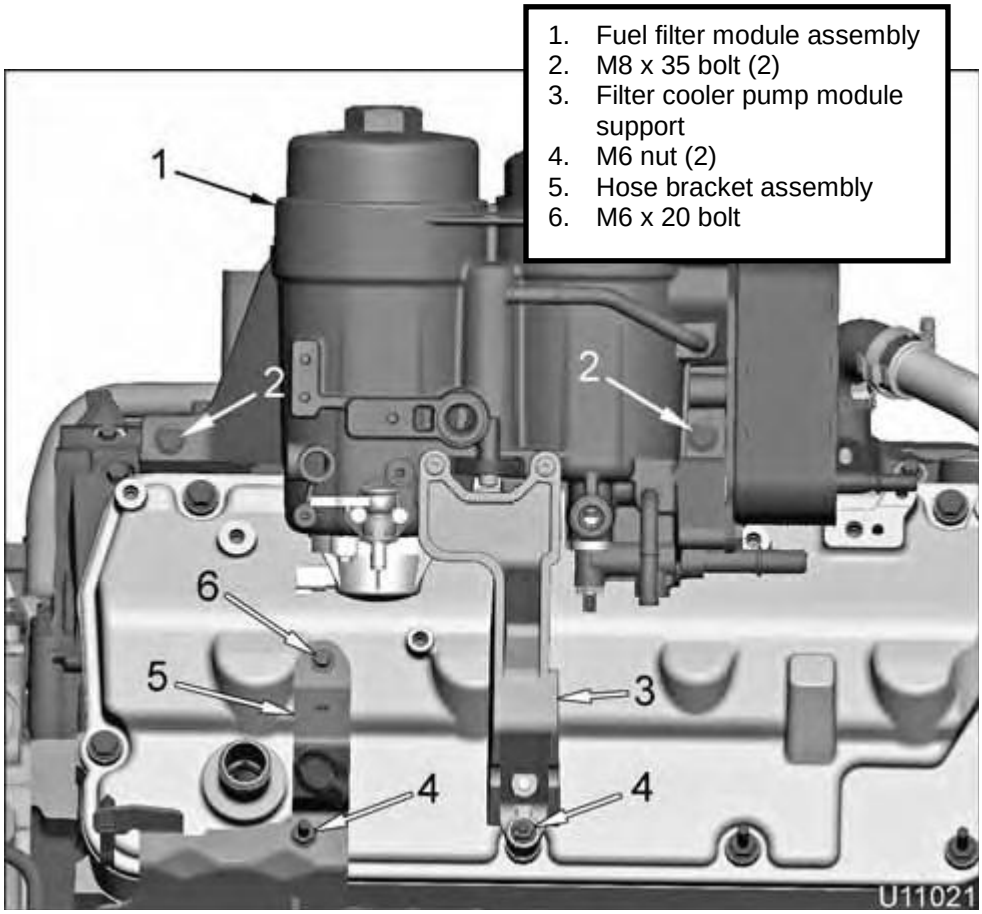

i. Position fuel filter and cooler assembly with filter cooler pump module support onto engine.

ii. Install two M8 x 35 bolts to secure the fuel filter cooler assembly and tighten bolts to 31 N-m (23 lbf-ft).

iii. Install M6 nut to secure filter cooler pump module support and tighten nut to 13 N-m (115 lbf-in).

iv. Install hose bracket assembly, M6 x 20 bolt, and M6 nut.

v. Tight M6 x 20 bolt and M6 nut to 13 N-m (115 lbf-in).

3. Remove and replace the primary filter assembly, secondary fuel element assembly, both cap o-rings, and primary fuel element o-ring.

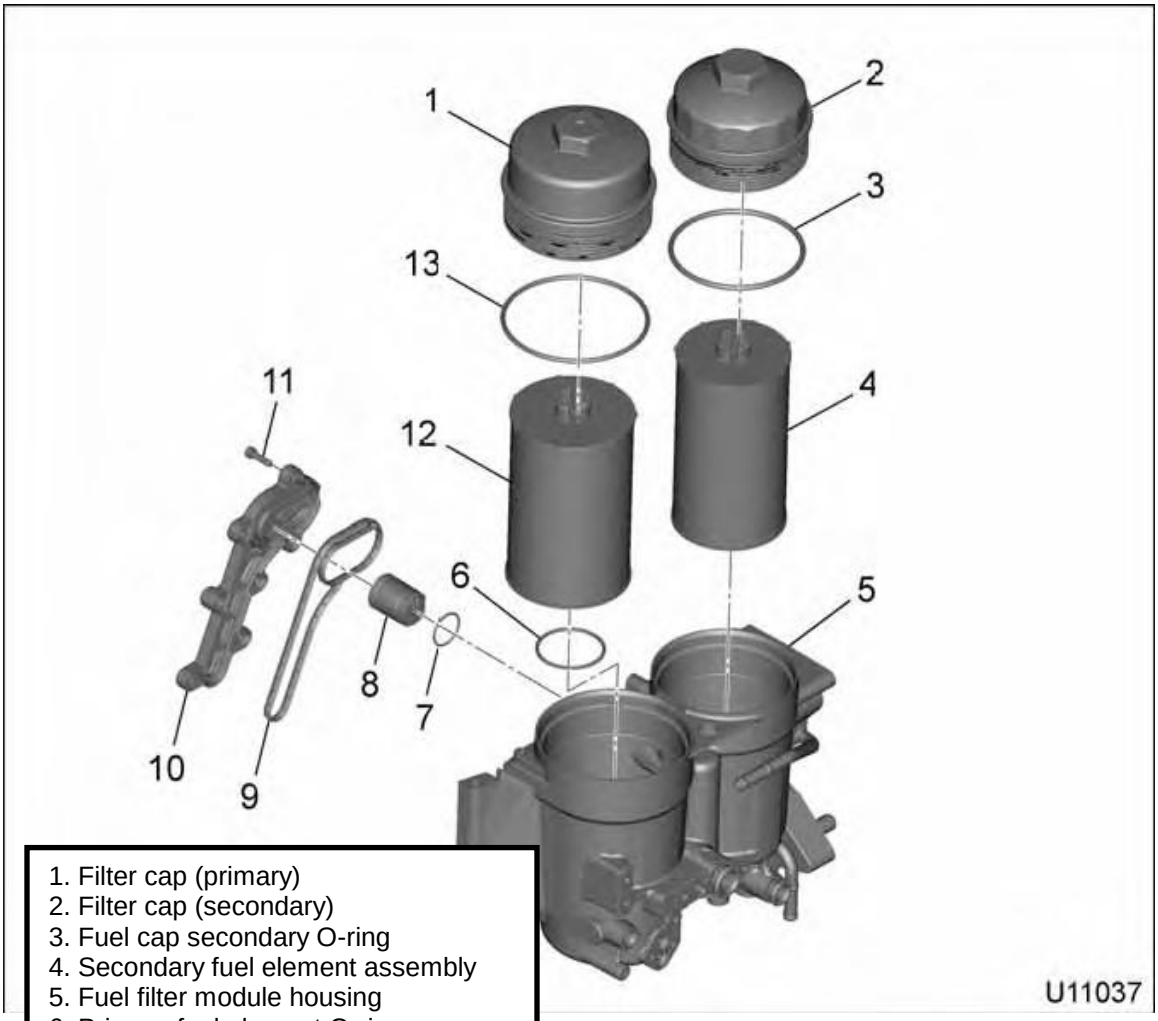

1. Filter cap (primary)
2. Filter cap (secondary)
3. Fuel cap secondary O-ring
4. Secondary fuel element assembly
5. Fuel filter module housing
6. Primary fuel element O-ring
7. Fuel O-ring
8. Fuel thermal bypass valve assembly
9. Fuel housing cover gasket
10. Fuel housing cover
11. M5 x 18 screw (7)
12. Primary filter assembly
13. Primary fuel cap O-ring

a. Remove primary fuel filter cap.

b. Remove and discard primary fuel cap O-ring, primary filter assembly, and primary fuel element O-ring.

c. Remove secondary fuel filter cap.

d. Remove and discard fuel cap secondary O-ring and secondary fuel element assembly.

e. Coat a new O-ring for the primary fuel filter cap with clean diesel fuel and install onto the fuel filter cap.

f. Attach fuel filter cap to a new filter assembly, by pushing the cap onto the filter assembly. The cap will snap onto filter assembly.

g. Coat the threads of the fuel filter cap with clean diesel fuel.

NOTE: Verify that the primary fuel element O-ring is installed on the bottom of the primary filter assembly.

• If the O-ring is loose or not installed, coat the O-ring with clean diesel fuel and install the O-ring in the bottom groove of the primary filter assembly.

• If the O-ring is installed, coat the O-ring with clean diesel fuel.

CAUTION: To prevent engine damage, slowly install the primary fuel filter cap and filter assembly into the fuel filter module housing to prevent distortion of the O-ring.

h. Slowly install the primary fuel filter cap and filter assembly into the fuel filter module housing.

i. Secure the fuel filter cap and filter assembly into the fuel filter module housing by turning the fuel filter cap clockwise until finger-tight.

j. Tighten the primary fuel filter cap to 50 N·m (37 lbf·ft).

k. Coat a new O-ring for the secondary fuel filter cap with clean diesel fuel and install onto the primary fuel filter cap.

l. Attach secondary fuel filter cap to a new fuel element assembly, by pushing the cap onto the fuel element assembly. The cap will snap into the element assembly.

m. Coat the threads of the fuel filter cap with clean diesel fuel.

n. Secure the fuel filter cap and fuel element assembly into the fuel filter module housing by turning the secondary fuel filter cap clockwise until finger-tight.

o. Tighten the secondary fuel filter cap to 40 N·m (29 lbf·ft)

4. Prime the low pressure fuel system.

a. Cycle engine ignition key.

- Key – On for 10 seconds.
- Key – Off for 15 seconds.
- Key – On for 10 seconds.
- Key – Off for 15 seconds.
- Key – On for 10 seconds.

b. Start the engine and check for leaks.

c. If leaks are found, shutdown the engine and correct the problem.

END OF SERVICE PROCEDURE

LABOR INFORMATION

Operation Number	Description	Time
A40-11506-1	Repair Return Fuel Valve	1.3
A40-11506-2	Add On: Vehicle Is Equipped With An Air Compressor	0.2

CAMPAIGN IDENTIFICATION LABEL

Each vehicle corrected in accordance with this campaign must be marked with a CTS-1075 Campaign Identification Label.

Complete the label and attach on a clean surface next to the vehicle identification number (VIN) plate.

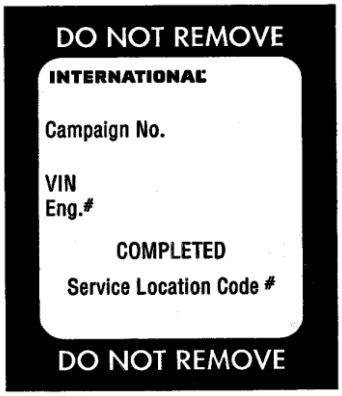

ADMINSTRATIVE/DEALER RESPONSIBILITIES

WARRANTY CLAIMS

Refer to Dealer Warranty Manual for procedures to conduct Recall Campaigns.

It is important that the Recall Coding be completed properly to assist in processing the warranty claim. Complete instructions will be found in the Warranty Manual, Section 7-1. Special attention should be given to Items 39 through 44:

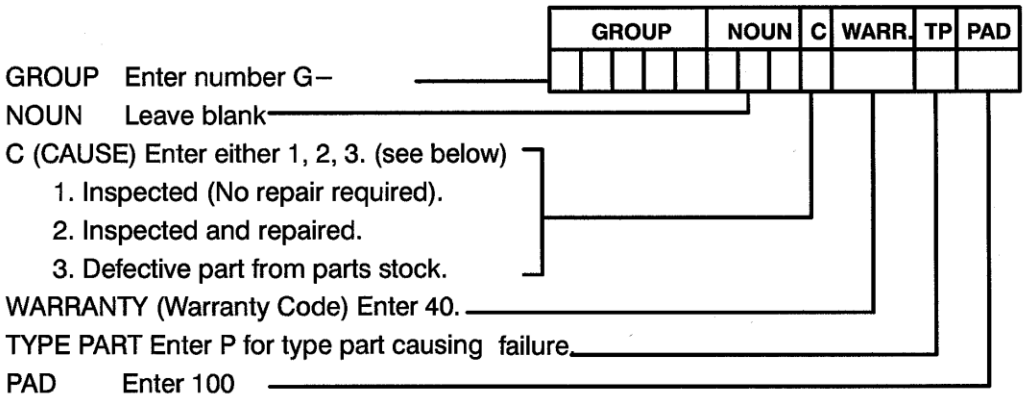

UNITED STATES AND POSSESSIONS

The National Traffic and Motor Vehicle Safety Act, as amended, provides that each vehicle that is subject to a vehicle recall campaign must be adequately repaired within a reasonable time after the owner has tendered it for repair. A failure to adequately repair within 60 days after a tender of a vehicle is prima facie evidence of failure to repair within a reasonable time. If the condition is not adequately repaired within 60 days, the owner may be entitled to replacement with an identical or reasonable equivalent vehicle at no charge, or to a refund of the purchase price less a reasonable allowance for depreciation.

Dealers must correct all vehicles subject to this campaign at no charge to the owner, regardless of mileage, age of vehicle, or ownership, from this time forward.

Dealers should proceed immediately to make necessary correction to units in inventory. All inventory vehicles subject to this recall campaign must be corrected prior to sale, transfer or delivery. If vehicles have been sold or transferred and you are in receipt of Customer Notification Letters and Authorization for Recall Service cards for those vehicles, the transfer location or customer must be notified immediately from your dealer location.

Dealers must make every effort to promptly schedule an appointment with each owner to repair his or her vehicle as soon as possible. However, consistent with

the customer notification, dealers are expected to complete the repairs on the mutually agreed upon service date.

Dealers involved in the recall process will be furnished a listing of owner names and addresses to enable them to follow up with owners and have the vehicles corrected. Use of this listing must be limited to this campaign because the list may contain information obtained from state motor vehicle registration records and the use of such motor vehicle registration data for purposes other than this campaign is a violation of law in several states.

CANADA

Dealers must correct all vehicles subject to this campaign at no charge to the owner, regardless of mileage, age of vehicle, or ownership, from this time forward.

Dealers should proceed immediately to make necessary correction to units in inventory. All inventory vehicles subject to this recall campaign must be corrected prior to sale, transfer or delivery. If vehicles have been sold or transferred and you are in receipt of Customer Notification Letters and Authorization for Recall Service cards for those vehicles, the transfer location or customer must be notified immediately from your dealer location.

Dealers must make every effort to promptly schedule an appointment with each owner to repair his or her vehicle as soon as possible. However, consistent with the customer notification, dealers are expected to complete the repairs on the mutually agreed upon service date.

Dealers involved in the recall process will be furnished a listing of owner names and addresses to enable them to follow up with owners and have the vehicles corrected. Use of this listing must be limited to this campaign because the list may contain information obtained from state motor vehicle registration records and the use of such motor vehicle registration data for purposes other than this campaign is a violation of law in several states.

EXPORT

Export Distributors should proceed immediately to make necessary correction to units in inventory. All inventory vehicles subject to this recall campaign must be corrected prior to sale, transfer or delivery. If vehicles have been sold or transferred and you are in receipt of Customer Notification Letters and Authorization for Recall Service cards for those vehicles, the transfer location or customer must be notified immediately from your distributor location.

Export Distributors are to submit warranty claims in the usual manner making reference to this recall number.

Export Distributors are expected to provide full cooperation and follow-up with respect to this important subject matter. If you have any questions or need further assistance, please contact the Regional Service Manager at your regional office.

NAVISTAR, INC

SERVICE PROCEDURE

G-11511
January 2012

SUBJECT: **SAFETY RECALL**
BATTERY CABLES on certain RE model school buses built 2/4/10 thru 6/16/11 with a 2010 exhaust emissions engine feature code 510974.

DEFECT DESCRIPTION

The battery cables may rub on the hydraulic cooler reservoir mounting bracket possibly resulting in an electrical short. An electrical short may cause a fire possibly resulting in property damage, personal injury, or death.

MODELS INVOLVED

This Safety Recall involves certain RE model school buses built 2/4/10 thru 6/16/11 with a 2010 exhaust emissions engine feature code 510974.

PARTS INFORMATION

Part Number	Part Description	Quantity
8900221R91	Kit, SR11510 & 11, Group 8D Battery Pkg	1
8900222R91	Kit, SR11510 & 11, Group 31 Battery Pkg	1

The repair kits contain the following parts:

Part Number	Part Description	Quantity	
		8900221R91	8900222R91
3547776C1	BOLT, M8X20 FINISH PER TMS-4518 TYPE I	1	1
934309R1	WASHER, LOCK M8	1	1
3554554C1	GUIDE, BRK HOSE & CABLE, DUAL SWIVEL SADDLE SPACER SIZE 5 INSERT MOLDED	4	3
1677372C1	CLAMP,PIPE, SGL-CUSHIONED 2 1/2 I.D. W/0.406 MTG HOL	1	1
2041341C1	SADDLE,CLAMP, CABLE LOCK MOUNT 1/4" HARDWARE	2	2
3627806C2	EXTENSION, CLIP	1	1
250537C1	EXTENSION, CLIP	3	2
3516934C1	STRAP,CABLE LOCK, 20 IN 250 LB	28	22
2002176C2	EXTENSION, CLIP	1	1
3553742C1	GUIDE, BRK HOSE & CABLE, 2-WAY SADDLE MOUNT FOR 6 MM HEX HD BOLTS	9	7
2012155C1	CLIP, SPRING TYPE 5/16"	1	1
454541C1	EXTENSION, CLIP	2	0
431193C1	EXTENSION,CLIP	0	1
9413979	NUT, 3/8-16 UNC	1	1
24841R1	BOLT, HH 3/8-16UNC X 1 1/2,PHC GRADE	1	1
25709R1	WASHER, HARDENED 3/8" - 0.406 ID X 0.812 OD ZND	1	1
2212199C1	GROMMET, 3 INCH	2	0
2212509C1	PLATE, BATTERY GROMMET	2	0
456107C1	SCREW, SELF-DRILLING PAN HD CR #10-16 X 1/2	8	0
25483R1	BOLT 1/4" X 1"	15	10
120380	WASHER, LOCK 1/4"	15	10
25519R1	NUT, HEX TYPE 8 1/4" UNC	15	10
3932762C1	SUPPORT, ASSY, RADIATOR/HYDRAULIC LINES	1	1

SERVICE PROCEDURE

WARNING! PARK VEHICLE ON HARD FLAT SURFACE, TURN THE ENGINE OFF, SET THE PARKING BRAKE AND BLOCK THE WHEELS TO PREVENT THE VEHICLE FROM MOVING IN BOTH DIRECTIONS. FAILURE TO DO SO MAY RESULT IN PROPERTY DAMAGE, PERSONAL INJURY AND/OR DEATH.

WARNING! IF THE VEHICLE MUST BE RAISED, DO NOT WORK UNDER THE VEHICLE SUPPORTED ONLY BY JACKS. JACKS CAN SLIP OR FALL OVER, POTENTIALLY RESULTING IN PROPERTY DAMAGE, PERSONAL INJURY AND/OR DEATH.

WARNING! ALWAYS WEAR SAFE EYE PROTECTION WHEN PERFORMING VEHICLE MAINTENANCE. FAILURE TO DO SO MAY RESULT IN SERIOUS EYE INJURY.

WARNING! ALLOW COMPONENTS IN ENGINE COMPARTMENT TO COOL BEFORE SERVICING ENGINE OR VEHICLE. FAILURE TO DO SO MAY RESULT IN PROPERTY DAMAGE, PERSONAL INJURY AND/OR DEATH.

WARNING! KEEP FLAMES OR SPARKS AWAY FROM VEHICLE AND DO NOT SMOKE WHILE SERVICING THE VEHICLE'S BATTERIES. BATTERIES EXPEL EXPLOSIVE GASES. FAILURE TO DO SO MAY RESULT IN PROPERTY DAMAGE, PERSONAL INJURY, AND/OR DEATH.

WARNING! REMOVE THE GROUND CABLE FROM THE NEGATIVE TERMINAL OF THE BATTERY BOX BEFORE DISCONNECTING ANY ELECTRICAL COMPONENTS. ALWAYS CONNECT THE GROUND CABLE LAST. FAILURE TO DO SO MAY RESULT IN PROPERTY DAMAGE, PERSONAL INJURY, AND/OR DEATH.

FOR VEHILE WITH GROUP 31 BATTERIES:

(For 8D Battery Procedure See Page 11)

1. Open battery compartment and disconnect frame and starter negative battery cable and clean power harness connector.

2. Inspect negative and positive battery cable routing path from the rear of the battery box to the starter. Cables that are routed over or between the coolant pipes will require removal from the starter to allow routing per the following steps. Cables that are routed under (3) the coolant pipes will not require removal from the starter attachment points (Figure 1).

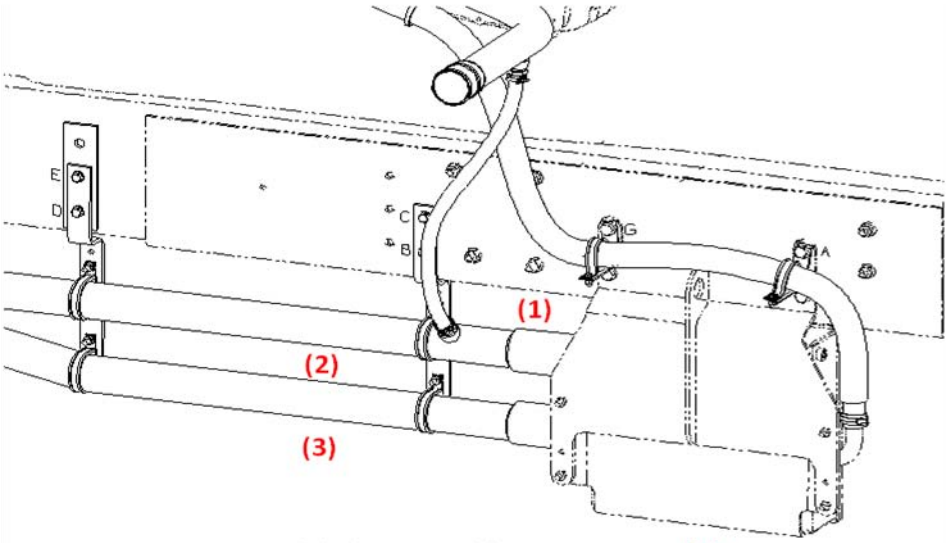

Possible battery cable routing, over **(1)**, between **(2)** or under **(3)** coolant pipes.

Figure 1

3. Remove all clipping points currently in place on the negative and positive battery cables from the exit point of the battery box to the starter.

   NOTE: If unit is equipped with an ammeter sensor on the negative battery cable, clip points may need to be removed to complete the following process and reinstalled at conclusion of repairs.

4. Remove negative and positive battery cables from the starter if cable(s) are routed over or between the coolant pipes as outlined in step 2.

5. Remove coolant pipe and hydraulic hose p-clamps from frame mounted bracket rearward of the hydraulic fluid reservoir. Remove bracket from frame rail mounting points (3/8" hardware). Reinstall replacement bracket (3932762C1) and p-clamps. (Figure 2) Install a large dual saddle (3553742C1, hardware 25483R1, 120380 and 25519R1) to the top of the lower bracket. Saddle will be tightened in step 13 (Figure 3).

   NOTE: Bracket installation can be performed by placing the bracket lengthwise between the frame and upper coolant pipe then rotate the bracket into final position.

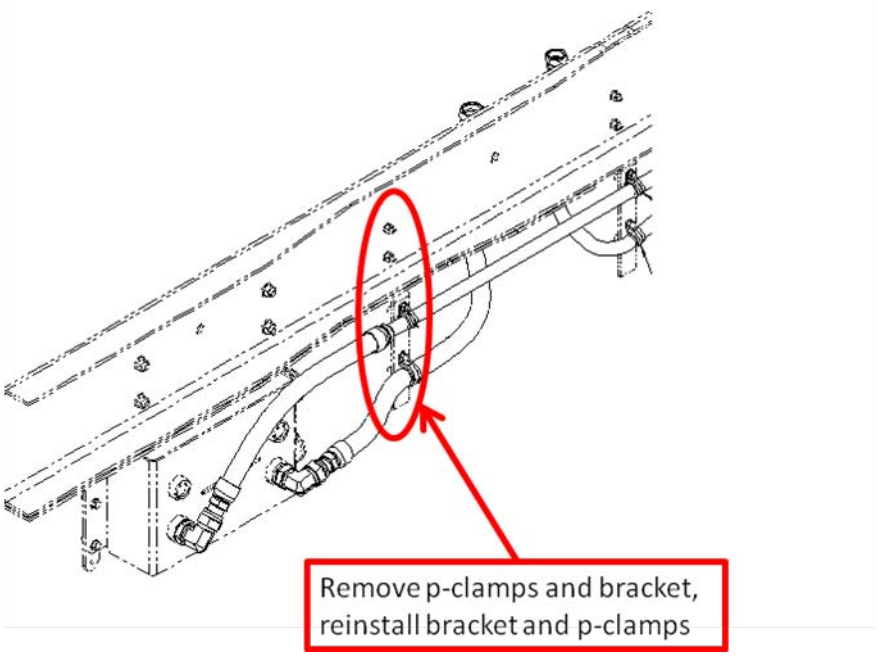

Figure 2

Figure 3

6. Loosely install single saddle (2041341C1, hardware 25483R1, 120380 and 25519R1) on extension clip (2002176C2) and install assembly to side of engine block using M8 bolt (3547776C1) and lock washer (934309R1). Saddle will be tightened in step 13 (Figure 4).

Figure 4

7. Install p-clamp (1677372C1) around lower coolant pipe approximately 8”-10” rearward of the frame mounted bracket replaced in step 5 and loosely install large dual saddle (3553742C1, hardware 25483R1, 120380 and 25519R1). Final location of p-clamp will be determined during final clipping of the battery cables. Saddle will be tightened in step 13 (Figure 5).

Figure 5

8. Remove upper rear hydraulic fluid reservoir mounting bolt (located between coolant pipes) and discard. Loosely install large dual saddle (3553742C1, hardware 25483R1, 120380 and 25519R1) on extension clip (3627806C2) and install assembly with new mounting hardware (9413979, 24841R1 and 25709R1). Saddle will be tightened in step 13 (Figure 6).

Figure 6

9. Assemble a single saddle (2041341C1) and large dual saddle (3553742C1, hardware 25483R1, 120380 and 25519R1) to spring clip (2012155C1) and install assembly on the rear upper slanted edge of the reservoir mounting bracket. Single saddle clamp is to be installed on the top, large dual saddle on the lower side of the spring clip. In the event edge trim was installed on the intended mounting surface, remove edge trim and discard. Tighten saddles in the position as shown in the below figure (Figure 7).

Figure 7

10. Loosely install large dual saddle (3553742C1, hardware 25483R1, 120380 and 25519R1) on extension clip (431193C1). Remove 12mm nut located above the hydraulic reservoir mounting bracket, install extension clip assembly as shown below and reinstall nut. Saddle will be tightened in step 13 (Figure 8).

Figure 8

If unit is equipped with battery box mounted disconnect switch, option code 49BVD, complete the following steps, If unit is not equipped with the disconnect switch, proceed to step 11.

a) Mark and drill extension clip mounting point. Inboard reinforcement leg, from rear of box, 6” forward and 3/4” down from the bottom of the box drill a 5/16” hole (Figure 9).
b) Loosely install large dual saddle (3553742C1, hardware 25483R1, 120380 and 25519R1) on extension clip (250537C1, hardware 25483R1, 120380 and 25519R1) and install assembly in the hole drilled in step 10. Saddle will be tightened in step 13 (Figure 9).

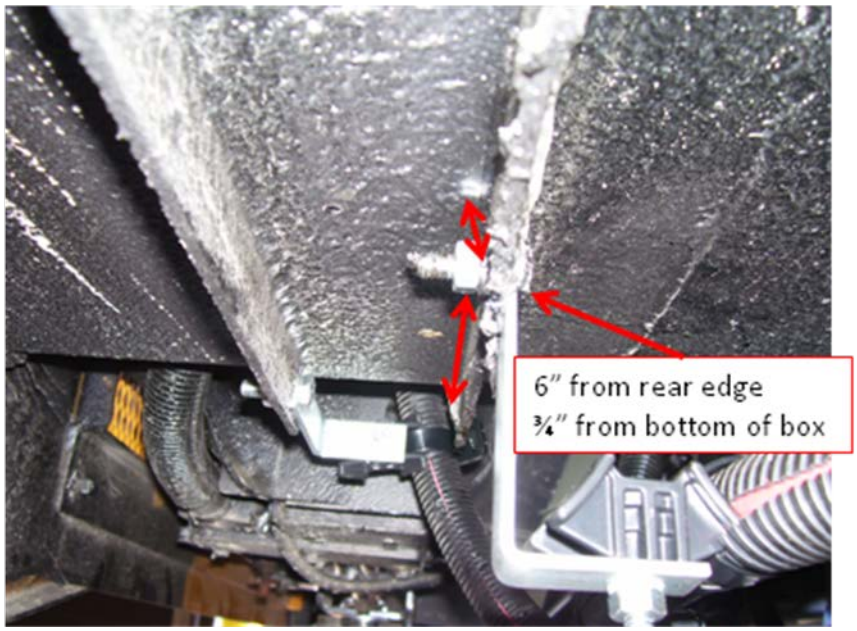

Figure 9

c) Mark and drill extension clip mounting point. Outboard reinforcement leg, from rear of box, 1” forward and 3/4” down from the bottom of the box drill a 5/16” hole (Figure 10).
d) Loosely install large dual saddle (3553742C1, hardware 25483R1, 120380 and 25519R1) on extension clip (250537C1, hardware 25483R1, 120380 and 25519R1) and install assembly in the hole drilled in step 10c. Saddle will be tightened in step 13 (Figure 10).

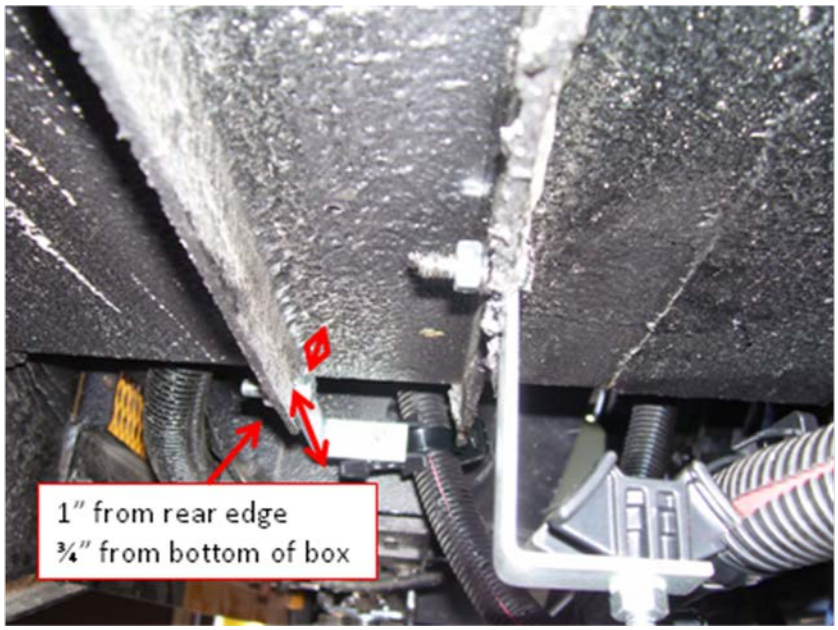

Figure 10

11. Inspect negative and positive battery cable to determine if any abrasion point caused insulation chafe requiring repair.

a. If no insulation chafe is found proceed to step 12.
b. If insulation chafe is found, use dual wall heat shrink (8900214R91) on the affected cable to repair the chafe. Installation can be completed by removing the protective conduit cover, slide the heat shrink to the affected area and heat as required.
c. If insulation chafe is found resulting in a condition requiring cable replacement (copper damage), open a case file and attach pictures of the affected area for repair instructions.

12. With the battery box tray fully extended and battery cables positioned for connection, install tie-straps at all clipping points beginning at the starter. All tie-straps used are ½", part number 3516934C1, unless otherwise stated. During installation of the remaining saddle clamp and tie-straps, ensure the cables are positioned eliminating contact to abrasion points and contact between the negative and positive cable. Prior to final tightening of the tie-straps, ensure cables are correctly positioned, and no abrasion points exist. Battery cables should make contact with clip point hardware only.

a. Reconnect battery cable to starter connection points.
b. Install a double swivel saddle (3554553C1) between the negative and positive cable near the rear of the starter (Figure 11).

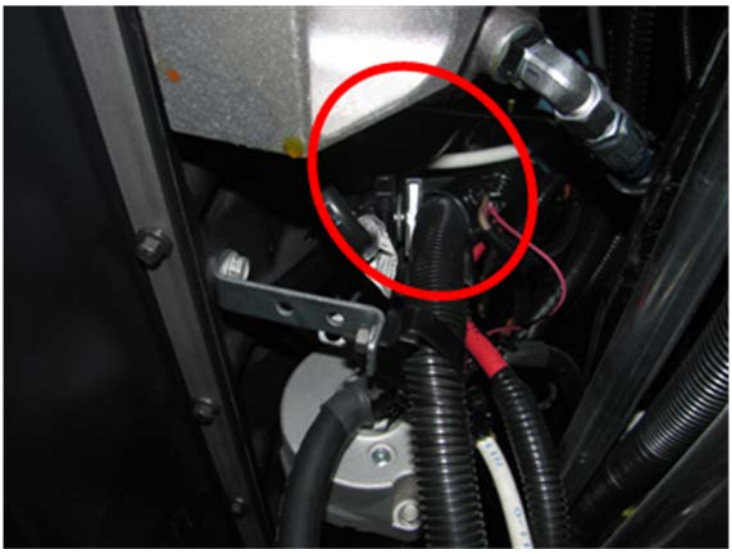

Figure 11

c. Install tie-strap to positive cable to the engine block mounted extension clip and saddle (Figure 4).
d. Install tie straps to negative and positive cables to the lower coolant pipe p-clamp. Position p-clamp to allow consistent routing of the

battery cables to eliminate any abrasion points prior to final tightening (Figure 5).

e. Install tie-strap to the negative and positive cables to the frame mounted coolant pipe bracket (Figure 3).
f. Install tie-straps to the negative and positive cables to the reservoir mounted extension clip (Figure 6).
g. Install tie-straps to the negative and positive cables to the spring clip (Figure 7).
h. Install tie strap to clean power harness to the single saddle mounted on the spring clip (Figure 7).
i. Install tie-strap to clean power harness to positive cable between rear of the battery box and spring clip.
j. Install tie-straps to the negative cable to the frame mounted extension clip (Figure 8).
k. If unit was equipped with disconnect switch, install tie-straps to the negative and positive cables to the additional bottom of battery box saddles (Figure 9 and 10). Inspect overall battery cable routing and add additional double swivel saddle (3554554C1) to eliminate any potential contact between battery cables (Figure 12).

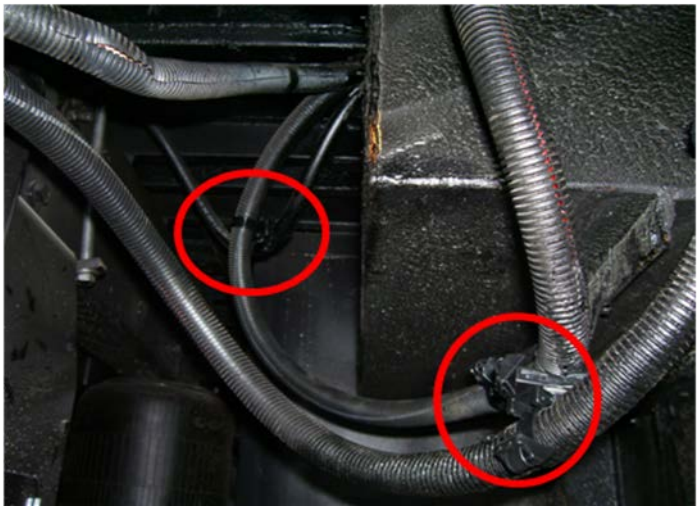

Figure 12

13. Verify all tie-straps and mounting hardware are tight and all tie-straps have been trimmed.

14. Reconnect battery cables and clean power harness.

15. Reapply grafo grease to the battery and starter connections.

FOR VEHICLES WITH 8D BATTERIES:

(For Group 31 Battery Procedure See Page 3)

1. Open battery compartment and disconnect negative and positive battery cable and negative clean power harness connector.

2. Loosen the battery tray stop bolts and remove the battery tray and battery assembly.

   NOTE: If proper lifting equipment or assistance is not available, individual battery removal should be performed to eliminate possible injury.

3. Remove clean power harness and starter negative and positive battery cables from the battery box. The negative frame ground cable will remain routed through the rear of the battery box (Figure 13).

Figure 13

4. Remove all clipping points currently in place on the negative and positive battery cables from the battery box to the starter.

   NOTE: If unit is equipped with an ammeter sensor on the negative battery cable, clip points may need to be removed to complete the following process and reinstalled at conclusion of repairs.

5. Battery cables will be routed under the coolant pipes. If the cables are currently routed over (1) or between (2) the coolant pipes, pull the cables out, toward the rear of the unit, to allow proper routing per the following instructions (Figure 14).

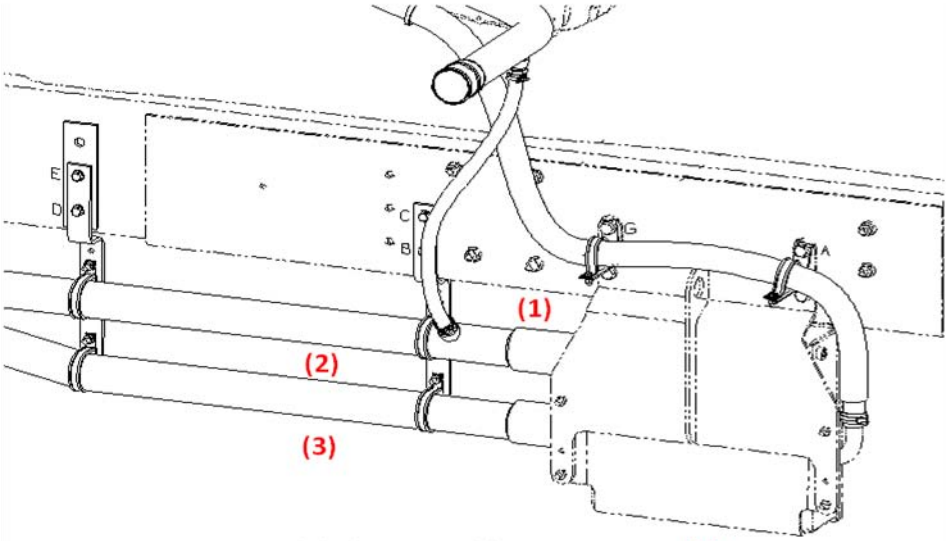

Possible battery cable routing, over **(1)**, between **(2)** or under **(3)** coolant pipes.

Figure 14

6. Remove coolant pipe and hydraulic hose p-clamps from frame mounted bracket rearward of the hydraulic fluid reservoir. Remove bracket from frame rail mounting points. Reinstall replacement bracket (3932762C1) and p-clamps (Figure 15). Install a large dual saddle (3553742C1, hardware 25483R1, 120380 and 25519R1) to the top of the lower bracket. Saddle will be tightened in step 20 (Figure 16).

NOTE: Bracket installation can be performed by placing the bracket lengthwise between the frame and upper coolant pipe then rotate the bracket into final position.

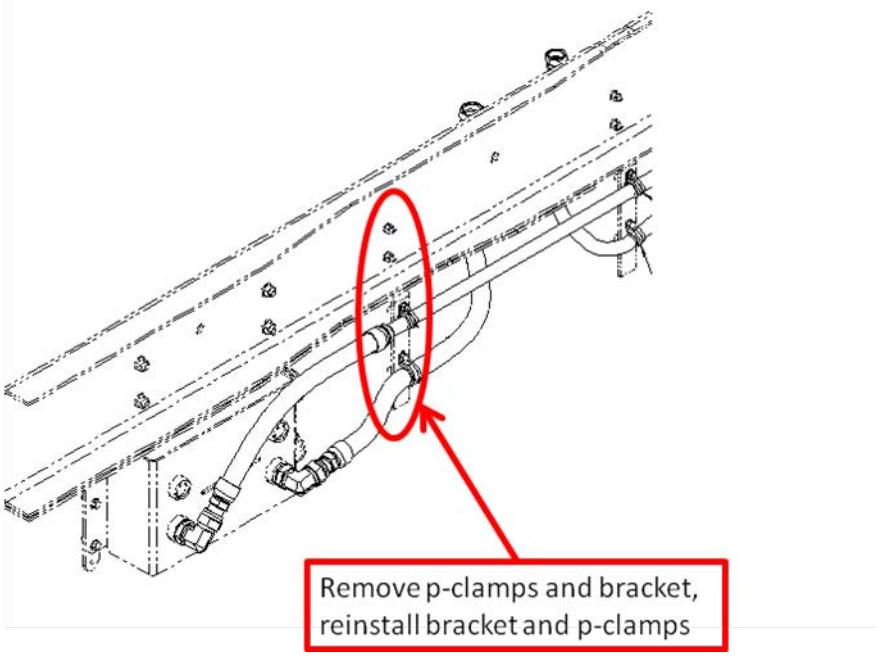

Figure 15

Figure 16

7. Loosely install single saddle (2041341C1, hardware 25483R1, 120380 and 25519R1) on extension clip (2002176C2) and install assembly to side of engine block using M8 bolt (3547776C1) and lock washer (934309R1). Saddle will be tightened in step 20 (Figure 17).

Figure 17

8. Install p-clamp (1677372C1) around lower coolant pipe approximately 8”-10” rearward of the frame mounted bracket replaced in step 6 and loosely install large dual saddle (3553742C1, hardware 25483R1, 120380 and 25519R1). Final location of p-clamp will be determined during final clipping of the battery cables. Saddle will be tightened in step 20 (Figure 18).

Figure 18

9. Remove upper rear hydraulic fluid reservoir mounting bolt (located between coolant pipes) and discard. Loosely install large dual saddle (3553742C1, hardware 25483R1, 120380 and 25519R1) on extension clip (3627806C2, hardware 9413979, 24841R1 and 25709R1) and install assembly. Saddle will be tightened in step 20 (Figure 19).

Figure 19

10. Assemble a single saddle (2041341C1) and large dual saddle (3553742C1, hardware 25483R1, 120380 and 25519R1) to the spring clip (2012155C1) and install assembly on the rear upper slanted edge of the reservoir mounting bracket. Single saddle clamp is to be installed on the top, large dual saddle on the lower side of the spring clip. In the event edge trim was installed on the intended mounting surface, remove edge trim and discard. Tighten saddles in the position as shown in the below figure (Figure 20).

Figure 20

11. Mark and drill two (2) - 3” and two (2) - 5/16” holes in the aft side of the battery box. Holes are to be drilled in the upper rear corner of the aft side of the battery box (Figure 21).

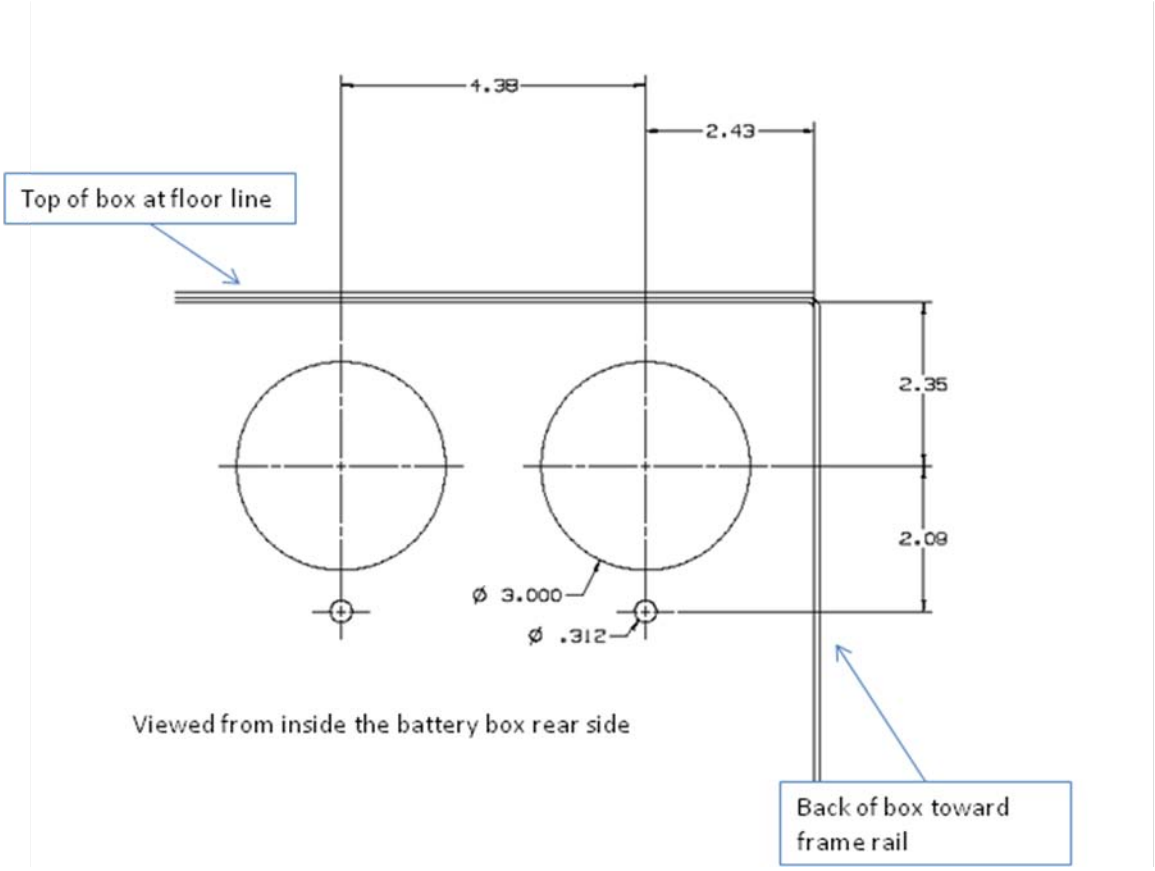

Figure 21

12. Position and install routing grommet and mounting plate (Qty 2 - 2212199C1 and 2212509C1) with self drilling screw (Qty 8 - 456107C1) (Figure 22).

NOTE: Grommets and plates ***MUST*** be installed from the inside of the battery box.

Figure 22

13. Install two (2) saddles (3553742C1, hardware 25483R1, 120380 and 25519R1) on extension clip (454541C1). Install extension clip assembly (hardware 25483R1, 120380 and 25519R1) on the outside of the battery box using the holes drilled below the cable routing points. This step will require assistance from a second technician (Figure 23).

Figure 23

If unit is equipped with the battery box mounted disconnect switch, option code 49BVD, complete the following steps. If unit is not equipped with the disconnect switch, proceed to step 14.

a) Loosely install large saddle (Qty 3 - 3553742C1, hardware 25483R1, 120380 and 25519R1) on extension clip (Qty 3 - 250537C1, hardware 25483R1, 120380 and 25519R1) and install assembly in holes 10a, 10b and 10c. Saddle will be tightened in step 20 (Figure 24).

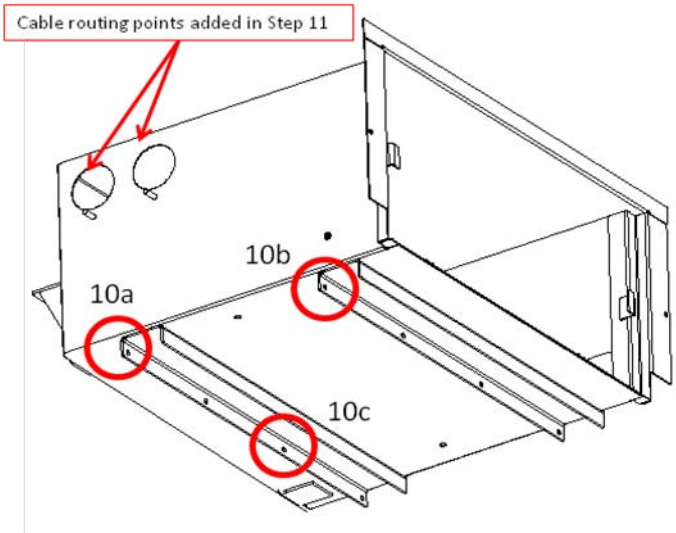

Figure 24

14. Clean battery box area of all shavings and debris.

15. Inspect negative and positive battery cable to determine if any abrasion point caused insulation chafe requiring repair.

a. If no insulation chafe is found proceed to step 16.
b. If insulation chafe is found, use dual wall heat shrink (8900214R91) on the affected cable to repair the chafe. Installation can be completed by removing the protective conduit cover, slide the heat shrink to the affected area and heat as required.
c. If insulation chafe is found resulting in a condition requiring cable replacement (copper damage), open a case file and attach pictures of the affected area for repair instructions.

16. Place positive battery cable and clean power harness into the battery box using the inboard routing point. Place the starter negative battery cable into the battery box using the outboard routing point.

17. Reinstall the battery tray/batteries and secure the tray stop bolts/hold down hardware.

18. Reconnect all battery cable connections and clean power harness connections.

19. With the battery box extended approximately half-way, install tie-straps at all clipping points beginning at the starter. All tie-straps used are ½", part number 3516934C1, unless otherwise stated. During installation of the remaining saddle clamp and tie-straps, ensure the cables are positioned eliminating contact to abrasion points and contact between the negative and positive cable. Prior to final tightening of the tie-straps, ensure battery tray can be extended approximately half way, cables are correctly positioned, and no abrasion points exist. Battery cables should make contact with clip point hardware only.

a. Install a double swivel saddle (3554554C1) between the negative and positive cable near the front of the starter (Figure 25).

Figure 25

b. Install tie-strap to positive cable to the engine block mounted extension clip and saddle (Figure 17).
c. Install tie straps to negative and positive cables to the lower coolant pipe p-clamp. Position p-clamp to allow consistent routing of the battery cables to eliminate any abrasion points prior to final tightening (Figure 18).
d. Install tie-strap to the negative and positive cables to the frame mounted coolant pipe bracket (Figure 15, 16).
e. Install tie-straps to the negative and positive cables to the reservoir mounted extension clip (Figure 19).
f. Install tie-strap to clean power harness to the single saddle mounted on the spring clip (Figure 19).
g. Install tie-straps to the negative and positive cables to the spring clip (Figure 20).
h. Install tie-straps to negative and positive cables and clean power harness to the battery box mounted saddles (Figure 23).

If unit was equipped with disconnect switch, install tie-straps to the negative and positive cables to the additional bottom of battery box saddles (Figure 24).

i. Install tie-strap to clean power harness to positive cable between rear of the battery box and spring clip. Inspect overall battery cable routing and add additional double swivel saddle (3554554C1) to eliminate any potential contact between battery cables (Figure 26).

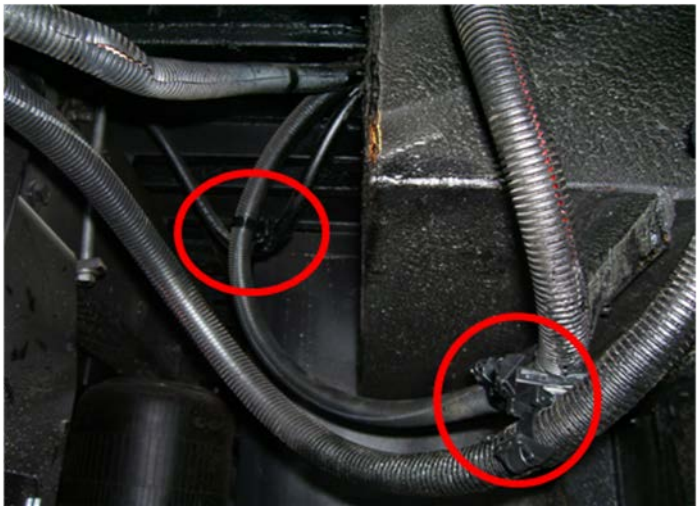

Figure 26

20. Verify all tie-straps and mounting hardware are tight and all tie-straps have been trimmed.

21. Reapply grafo grease to battery connections.

END OF SERVICE PROCEDURE

LABOR INFORMATION

Operation Number	Description	Time
A40-11511-1	Vehicle Equipped with Group 31 Battery	1.4
A40-11511-2	Vehicle Equipped with 8D Battery	1.9
A40-11511-3	Add On: Vehicle Equipped with Battery Box Mounted Disconnect Switch	0.2

CAMPAIGN IDENTIFICATION LABEL

Each vehicle corrected in accordance with this campaign must be marked with a CTS-1075 Campaign Identification Label.

Complete the label and attach on a clean surface next to the vehicle identification number (VIN) plate.

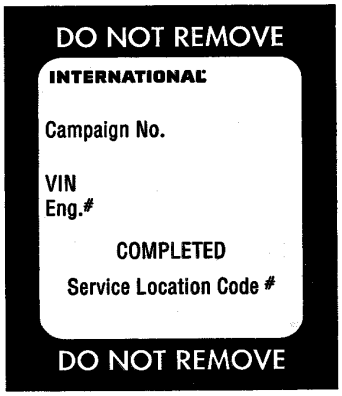

ADMINSTRATIVE/DEALER RESPONSIBILITIES

WARRANTY CLAIMS

Refer to Dealer Warranty Manual for procedures to conduct Recall Campaigns.

It is important that the Recall Coding be completed properly to assist in processing the warranty claim. Complete instructions will be found in the Warranty Manual, Section 7-1. Special attention should be given to Items 39 through 44:

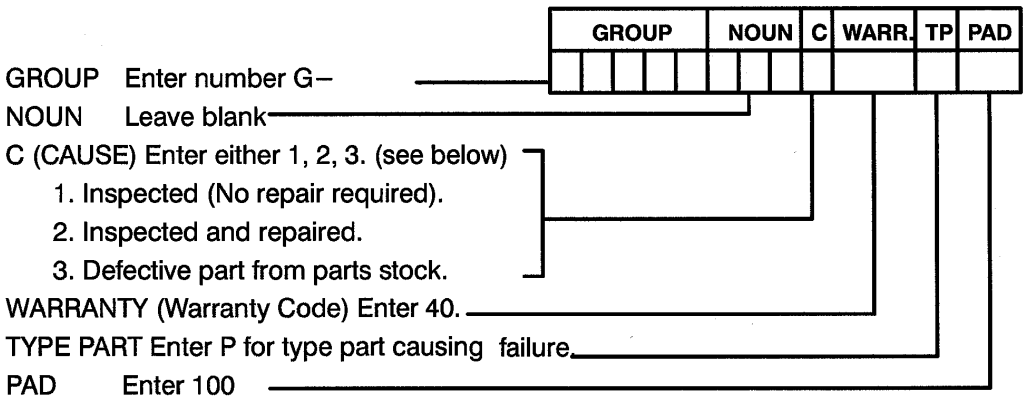

UNITED STATES AND POSSESSIONS

The National Traffic and Motor Vehicle Safety Act, as amended, provides that each vehicle that is subject to a vehicle recall campaign must be adequately repaired within a reasonable time after the owner has tendered it for repair. A failure to adequately repair within 60 days after a tender of a vehicle is prima facie evidence of failure to repair within a reasonable time. If the condition is not adequately repaired within 60 days, the owner may be entitled to replacement with an identical or reasonable equivalent vehicle at no charge, or to a refund of the purchase price less a reasonable allowance for depreciation.

Dealers must correct all vehicles subject to this campaign at no charge to the owner, regardless of mileage, age of vehicle, or ownership, from this time forward.

Dealers should proceed immediately to make necessary correction to units in inventory. All inventory vehicles subject to this recall campaign must be corrected prior to sale, transfer or delivery. If vehicles have been sold or transferred and you are in receipt of Customer Notification Letters and Authorization for Recall Service cards for those vehicles, the transfer location or customer must be notified immediately from your dealer location.

Dealers must make every effort to promptly schedule an appointment with each owner to repair his or her vehicle as soon as possible. However, consistent with the customer notification, dealers are expected to complete the repairs on the mutually agreed upon service date.

Dealers involved in the recall process will be furnished a listing of owner names and addresses to enable them to follow up with owners and have the vehicles corrected. Use of this listing must be limited to this campaign because the list may contain information obtained from state motor vehicle registration records and the use of such motor vehicle registration data for purposes other than this campaign is a violation of law in several states.

CANADA

Dealers must correct all vehicles subject to this campaign at no charge to the owner, regardless of mileage, age of vehicle, or ownership, from this time forward.

Dealers should proceed immediately to make necessary correction to units in inventory. All inventory vehicles subject to this recall campaign must be corrected prior to sale, transfer or delivery. If vehicles have been sold or transferred and you are in receipt of Customer Notification Letters and Authorization for Recall Service cards for those vehicles, the transfer location or customer must be notified immediately from your dealer location.

Dealers must make every effort to promptly schedule an appointment with each owner to repair his or her vehicle as soon as possible. However, consistent with the customer notification, dealers are expected to complete the repairs on the mutually agreed upon service date.

Dealers involved in the recall process will be furnished a listing of owner names and addresses to enable them to follow up with owners and have the vehicles corrected. Use of this listing must be limited to this campaign because the list may contain information obtained from state motor vehicle registration records and the use of such motor vehicle registration data for purposes other than this campaign is a violation of law in several states.

EXPORT

Export Distributors should proceed immediately to make necessary correction to units in inventory. All inventory vehicles subject to this recall campaign must be corrected prior to sale, transfer or delivery. If vehicles have been sold or transferred and you are in receipt of Customer Notification Letters and Authorization for Recall Service cards for those vehicles, the transfer location or customer must be notified immediately from your distributor location.

Export Distributors are to submit warranty claims in the usual manner making reference to this recall number.

Export Distributors are expected to provide full cooperation and follow-up with respect to this important subject matter. If you have any questions or need further assistance, please contact the Regional Service Manager at your regional office.

NAVISTAR, INC

SERVICE PROCEDURE

G-11518
SEPTEMBER 2011

SUBJECT: **SAFETY RECALL**
ALTERNATOR WIRING on certain BE and CE model school buses built 6/27/06 thru 3/23/11 with a MaxxForce 7 engine feature code 12NTH, 12NTD, 12NTE, 12NTG, 12VYY, or 12627 and alternator feature code 0008GGR, 0008GGM, 0008GWX, or 0008GEL.

DEFECT DESCRIPTION

The positive alternator cable may rub on the engine control module mounting bracket possibly compromising its insulation causing an electrical short. An electrical short may cause a fire possibly resulting in property damage, personal injury, or death.

MODELS INVOLVED

This Safety Recall involves certain BE and CE model school buses built 6/27/06 thru 3/23/11 with a MaxxForce 7 engine feature code 12NTH, 12NTD, 12NTE, 12NTG, 12VYY, or 12627 and alternator feature code 0008GGR, 0008GGM, 0008GWX, or 0008GEL.

PARTS INFORMATION

Part Number	Part Description	Quantity
306132C1 or Equivalent	Tie Strap – Rated At 250 lbs 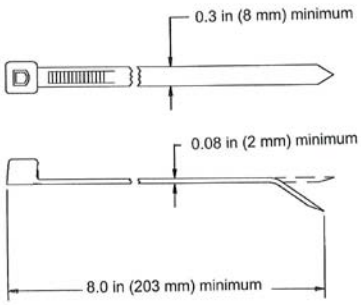	2

Part Number	Part Description	Quantity
2644027R1	Sleeve, Cable Insulating, Heat Shrink 17.8 mm x 50 Long	As Needed

SERVICE PROCEDURE

WARNING! PARK VEHICLE ON HARD FLAT SURFACE, TURN THE ENGINE OFF, SET THE PARKING BRAKE AND BLOCK THE WHEELS TO PREVENT THE VEHICLE FROM MOVING IN BOTH DIRECTIONS. FAILURE TO DO SO MAY RESULT IN PROPERTY DAMAGE, PERSONAL INJURY AND/OR DEATH.

WARNING! ALWAYS WEAR SAFE EYE PROTECTION WHEN PERFORMING VEHICLE MAINTENANCE. FAILURE TO DO SO MAY RESULT IN SERIOUS EYE INJURY.

WARNING! ALLOW COMPONENTS IN ENGINE COMPARTMENT TO COOL BEFORE SERVICING ENGINE OR VEHICLE. FAILURE TO DO SO MAY RESULT IN PROPERTY DAMAGE, PERSONAL INJURY AND/OR DEATH.

WARNING! KEEP FLAMES OR SPARKS AWAY FROM VEHICLE AND DO NOT SMOKE WHILE SERVICING THE VEHICLE'S BATTERIES. BATTERIES EXPEL EXPLOSIVE GASES. FAILURE TO DO SO MAY RESULT IN PROPERTY DAMAGE, PERSONAL INJURY, AND/OR DEATH.

WARNING! REMOVE THE GROUND CABLE FROM THE NEGATIVE TERMINAL OF THE BATTERY BOX BEFORE DISCONNECTING ANY ELECTRICAL COMPONENTS. ALWAYS CONNECT THE GROUND CABLE LAST. FAILURE TO DO SO MAY RESULT IN PROPERTY DAMAGE, PERSONAL INJURY, AND/OR DEATH.

1. Inspect and determine if the alternator cables are properly tie strapped to the engine control module mounting bracket. If so, service procedure is complete.

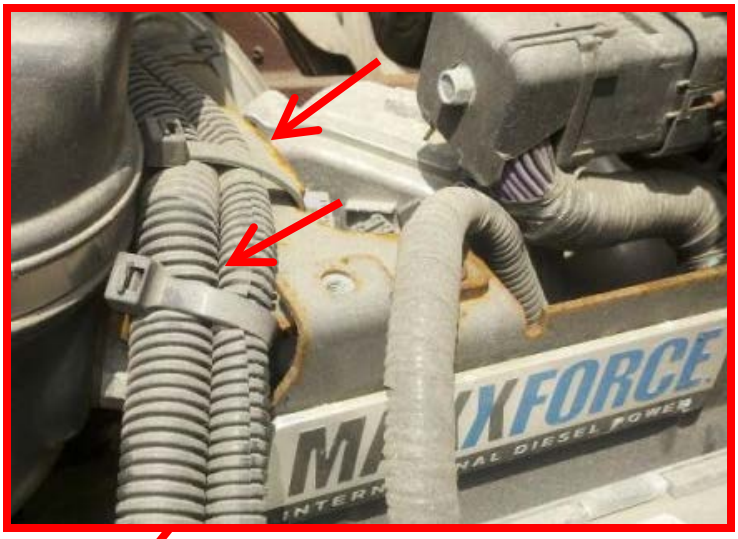

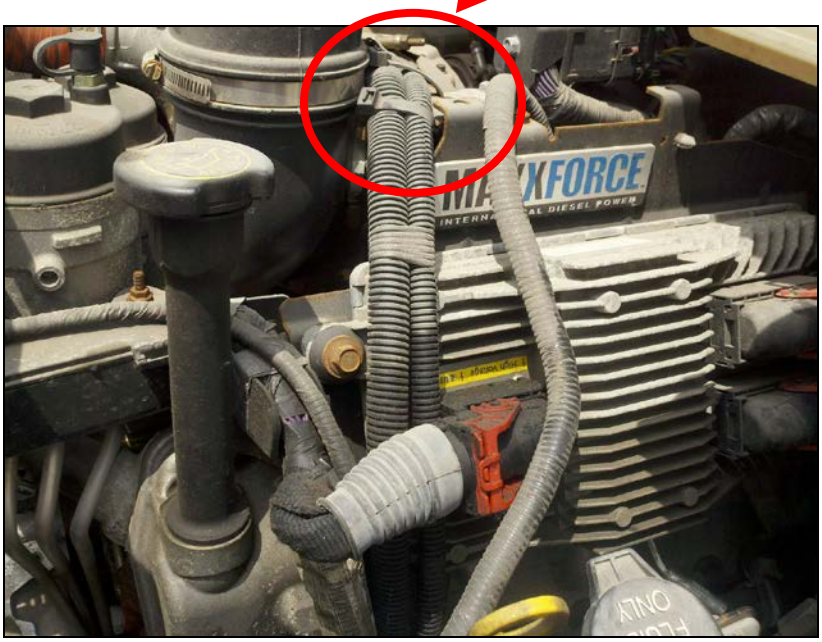

2. If cables are not properly tie strapped to the bracket determine if the insulation on either alternator cable is damaged due to rubbing on the engine control module mounting bracket. Repair the alternator cable insulation with heat shrink sleeve as necessary.

3. Tie strap the alternator cables to the engine control module mounting bracket.

END OF SERVICE PROCEDURE

LABOR INFORMATION

Operation Number	Description	Time
A40-11518-1	Inspect For Tie Straps No Repair Required	0.2
A40-11518-2	Inspect For Tie Straps No Cable Insulation Repair Install Tie Straps	0.3
A40-11518-3	Inspect For Tie Straps Repair Insulation On 1 Cable Install Tie Straps	0.6
A40-11518-4	Inspect For Tie Straps Repair Insulation On 2 Cables Install Tie Straps	0.7

CAMPAIGN IDENTIFICATION LABEL

Each vehicle corrected in accordance with this campaign must be marked with a CTS-1075 Campaign Identification Label.

Complete the label and attach on a clean surface next to the vehicle identification number (VIN) plate.

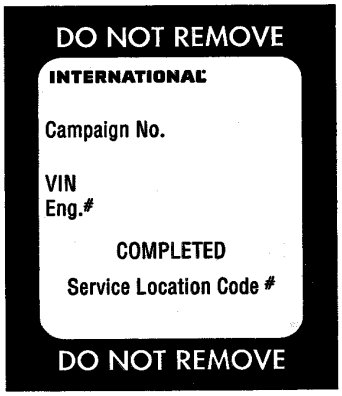

ADMINSTRATIVE/DEALER RESPONSIBILITIES

WARRANTY CLAIMS

Refer to Dealer Warranty Manual for procedures to conduct Recall Campaigns.

It is important that the Recall Coding be completed properly to assist in processing the warranty claim. Complete instructions will be found in the Warranty Manual, Section 7-1. Special attention should be given to Items 39 through 44:

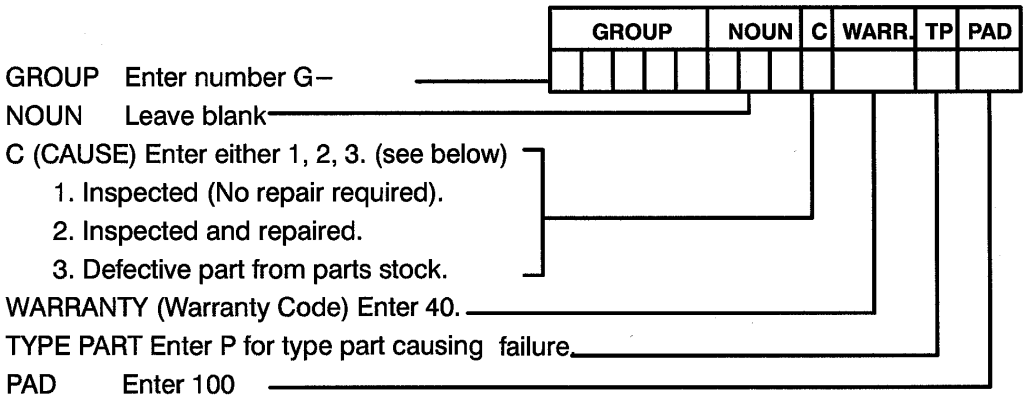

UNITED STATES AND POSSESSIONS

The National Traffic and Motor Vehicle Safety Act, as amended, provides that each vehicle that is subject to a vehicle recall campaign must be adequately repaired within a reasonable time after the owner has tendered it for repair. A failure to adequately repair within 60 days after a tender of a vehicle is prima facie evidence of failure to repair within a reasonable time. If the condition is not adequately repaired within 60 days, the owner may be entitled to replacement with an identical or reasonable equivalent vehicle at no charge, or to a refund of the purchase price less a reasonable allowance for depreciation.

Dealers must correct all vehicles subject to this campaign at no charge to the owner, regardless of mileage, age of vehicle, or ownership, from this time forward.

Dealers should proceed immediately to make necessary correction to units in inventory. All inventory vehicles subject to this recall campaign must be corrected prior to sale, transfer or delivery. If vehicles have been sold or transferred and you are in receipt of Customer Notification Letters and Authorization for Recall Service cards for those vehicles, the transfer location or customer must be notified immediately from your dealer location.

Dealers must make every effort to promptly schedule an appointment with each owner to repair his or her vehicle as soon as possible. However, consistent with

the customer notification, dealers are expected to complete the repairs on the mutually agreed upon service date.

Dealers involved in the recall process will be furnished a listing of owner names and addresses to enable them to follow up with owners and have the vehicles corrected. Use of this listing must be limited to this campaign because the list may contain information obtained from state motor vehicle registration records and the use of such motor vehicle registration data for purposes other than this campaign is a violation of law in several states.

CANADA

Dealers must correct all vehicles subject to this campaign at no charge to the owner, regardless of mileage, age of vehicle, or ownership, from this time forward.

Dealers should proceed immediately to make necessary correction to units in inventory. All inventory vehicles subject to this recall campaign must be corrected prior to sale, transfer or delivery. If vehicles have been sold or transferred and you are in receipt of Customer Notification Letters and Authorization for Recall Service cards for those vehicles, the transfer location or customer must be notified immediately from your dealer location.

Dealers must make every effort to promptly schedule an appointment with each owner to repair his or her vehicle as soon as possible. However, consistent with the customer notification, dealers are expected to complete the repairs on the mutually agreed upon service date.

Dealers involved in the recall process will be furnished a listing of owner names and addresses to enable them to follow up with owners and have the vehicles corrected. Use of this listing must be limited to this campaign because the list may contain information obtained from state motor vehicle registration records and the use of such motor vehicle registration data for purposes other than this campaign is a violation of law in several states.

EXPORT

Export Distributors should proceed immediately to make necessary correction to units in inventory. All inventory vehicles subject to this recall campaign must be corrected prior to sale, transfer or delivery. If vehicles have been sold or transferred and you are in receipt of Customer Notification Letters and Authorization for Recall Service cards for those vehicles, the transfer location or customer must be notified immediately from your distributor location.

Export Distributors are to submit warranty claims in the usual manner making reference to this recall number.

Export Distributors are expected to provide full cooperation and follow-up with respect to this important subject matter. If you have any questions or need further assistance, please contact the Regional Service Manager at your regional office.

NAVISTAR, INC

BLUE BIRD

AUGUST 13, 2008

TO: **NORTH AMERICAN DEALERS**

SUBJECT: **SERVICE BULLETIN S08NL AUXILIARY FAN INSPECTION**

MODELS AFFECTED: **2009 MODEL YEAR ALL AMERICAN, MICRO BIRD AND VISION**

The auxiliary fan ball seat may disengage from the base allowing the fan motor to separate from the base. The auxiliary fans on the subject buses should be inspected and, if necessary, replaced according to Service Bulletin S08NL.

Labor time allowed to inspect the fan ball socket is 0.1 hour **per bus**. A form is provided for dealers or owners to submit by fax or email directly to DCM to order replacement fans when needed. Labor time allowed to replace fans with defective ball sockets is 0.2 hours **per fan**.

Claims for labor (if any) to perform Service Bulletin S08NL may be submitted by dealers, if modifications are performed within one (1) year of date of issue of this bulletin. Use the create Campaign/Bulletin Claim form Function on BBOND Claim Trac to submit claims. Service Bulletin S08NL expires one (1) year from date of issue.

A printout of your buses affected by Service Bulletin S08NL is attached.

Service Bulletin S08NL is being mailed directly to owners. Owners are being advised to contact their dealer for assistance, if needed.

Questions regarding Service Bulletin S08NL should be directed to your Blue Bird Service Representative.

Sincerely,

Bill Coleman

Bill Coleman
Blue Bird Corporation
478-822-2242
bill.coleman@blue-bird.com

BLUE BIRD

August 13, 2008

Dear Blue Bird Owner,

You will find enclosed a copy of Service Bulletin S08NL regarding the auxiliary fan(s) installed on 2009 model year Blue Bird All American, Micro-Bird or "Vision" buses.

The auxiliary fan ball seat may disengage from the fan motor assembly allowing the fan motor to drop down. The auxiliary fan(s) on your affected buses should be inspected according to Service Bulletin S08NL.

If fans with defective ball sockets are found, you should complete the inspection form provided with Service Bulletin S08NL and fax or email to DCM Manufacturing, Inc. DCM Manufacturing, Inc. will ship any replacement fans needed to you at 'no charge".

Your buses affected by Service Bulletin S08NL are identified by Blue Bird body number on the enclosed cover sheet.

Labor time allowed to inspect fan ball sockets is 0.1 hour **per bus**. Labor time allowed to replace fans with defective ball sockets is 0.2 hours **per fan**. A qualified repair technician should perform service Bulletin S08NL.

You may request reimbursement for labor from your Blue Bird dealer if Service Bulletin S08NL is performed within one (1) year from the date issued.

Service Bulletin S08NL expires one (1) year from date of issue.

Should you have any questions concerning this bulletin, please contact your Blue Bird dealer.

Sincerely,

Bill Coleman

Bill Coleman
Blue Bird Corporation
478-822-2242
bill.coleman@blue-bird.com

BLUE BIRD

Auxiliary Fan Inspection BULLETIN

Models Affected: 2009 Model Year Blue Bird All American, Micro Bird and Vision Models

TN 80S

ISSUE

The auxiliary fan ball seat may disengage allowing the fan motor assembly to drop down.

CORRECTIVE ACTION

Inspect and, if necessary, replace complete fan assembly.

PROCEDURE

Each auxiliary fan on your bus (es) should be inspected according to the attached Field Bulletin issued by DCM Manufacturing.

Note: Check between fan motor housing and ball seat to determine if fan is a 2 or 3 wire type and indicate the type on the order form.

Fans showing inner ball seat protruding as indicated in DCM's Field Bulletin should be replaced.

To receive replacement fans you will need to complete the attached form and fax or email the completed form to DCM manufacturing as indicated on the form. Make additional copies of the form, as needed.

Labor time allowance for inspecting fan ball sockets is 0.1 hr **per bus**.

Labor time allowance for replacing fans with defective ball sockets is 0.2 hours **per fan**.

Request for reimbursement should be submitted in your usual manner.

Questions regarding this service bulletin should be addressed to your Blue Bird dealer.

Date of Issue: August 13, 2008

Table of Contents

AUXILIARY FAN WARRANTY FORM FOR SERVICE BULLETIN # S08NL

Fill out below form to order replacement fans. Make additional copies of this form as needed.

Customer Name: _____

Ship To Address: _____

City/State/Zip: _____

Phone: _____

Fax: _____

E-Mail: _____

2-wire fan motor has silver colored decal on fan motor housing with date code. Exmaple of date code "48,07"
3-wire fan motor has gold colored decal on fan motor housing with date code. If fan has 3 wires, check column below under 3-wire.

Body Number(s)	3-wire	Fan Date Code	Fan Date Code	Fan Date Code	Fan Date Code

Total number of Defective Fans: _____

PLEASE FAX COMPLETED FORM TO DCM MANUFACTURING, INC. (216) 362-6342 OR E-MAIL TO MISSY WILK AT Mwilk@dcm-mfg.com

* You will receive a fax or e-mail confirmation of receipt of claim and return ship date.

* Only fans that meet the conditions outlined in the Field Service Bulletin will be honored as a direct replacement from the manufacturer. All other warranty issues should be routed thru normal return policies.

FIELD BULLETIN: DCM MFG.

REFERENCE: Round Base Dash Fan Assemblies

POTENTIAL FAILURE: Under excessive force in certain directions, ball can disengage from base assembly.

VISUAL DETECTION: Note Fig. 1 - Correct assembly.
Note Fig. 2 - Shows inner ball seat protruding into adjustment channel indicating incorrect assembly.

CORRECTIVE ACTION: Contact DCM at 216-265-8006 ext. 109 for return authorization and replacement.

IF ANY PART OF THE BALL SEAT IS SHOWING IN THE U-CHANNEL (Fig. 2), FAN ASSEMBLY IS UNACCEPTABLE

Fig. 1

ACCEPTABLE BUILD

Fig. 2

UNACCEPTABLE BUILD
PART VISIBLE IN U-CHANNEL

BLUE BIRD

DECEMBER 18, 2008

TO: **NORTH AMERICAN DEALERS**

SUBJECT: **SERVICE BULLETIN S08NR FAN CLUTCH SPACER BOLTS**
MODELS AFFECTED: **2008-09 MODEL YEAR VISION BUSES WITH 2007 CATERPILLAR ENGINES**

Incorrect bolts and/or spacers may have been installed in the fan clutch on Blue Bird Vision buses equipped with 2007 model Caterpillar engines. If incorrect bolts were installed, the fan may separate from the fan clutch and may damage fan blades, fan clutch and potentially damage surrounding components.

Attached is a copy of Service Bulletin S08NR which contains instructions for inspecting and replacing the fan clutch bolts and spacers. A copy is attached. Replacement bolts are being shipped directly to owners so that the bolts, if needed, may be installed at time of inspection. If spacers are required, they should be ordered from Blue Bird Service Parts.

Time required to inspect the fan to clutch bolts and spacer is 0.1hrs (6 minutes) per bus. Time required to install correct length bolts and spacer, if needed, is 0.4hrs (24minutes) per bus.

A printout of your buses affected by Service Bulletin S08NR is also attached.

Service Bulletin S08NR, along with replacement bolts, is being sent directly to owners. Owners are being advised to contact their dealer for assistance, if needed.

Service Bulletin S08NR expires one (1) year from date of issue.

Questions regarding Service Bulletin S08NR should be directed to your Blue Bird Service Representative.

Sincerely,

Bill Coleman

Bill Coleman
Blue Bird Corporation
478-822-2242
bill.coleman@blue-bird.com

BLUE BIRD

December 18, 2008

Dear Blue Bird Owner,

You will find enclosed a copy of Service Bulletin S08NR regarding the fan clutch bolts and spacers installed on your 2008-09 model year Blue Bird "Vision" buses equipped with Caterpillar 07 model engines.

Incorrect length bolts and/or spacers may have been installed to attach the fan blade to the fan clutch. If incorrect bolts and/or spacers were installed, the fan blade may separate from the fan clutch and damage the fan blade, fan clutch and potentially damage surrounding components. To correct this condition, the fan clutch bolts and spacers must be inspected and, if found to be incorrect, changed to the correct length bolts and spacers.

Correct length bolts have been included with this mailing so inspection and replacement may be performed at the same time. If spacers are needed, you will need to contact your usual Blue Bird service parts source. Inspection and installation instructions are provided in Service Bulletin S08NR. (Copy attached)

Your buses affected by Service Bulletin S08NR are identified by Blue Bird body number on the enclosed cover sheet.

Time required to inspect for correct length fan to clutch bolts and/or spacers is 0.1 hours (6 minutes) per bus. Time required to install correct length fan to clutch bolts and/or spacers is 0.4 hours (24 minutes) per bus.

To have Service Bulletin S08NR performed, you may: 1) Contact your Blue Bird dealer to arrange for them to perform this procedure; **2)** Have a qualified repair facility convenient to you perform this procedure; or **3)** You may perform this procedure yourself. In either case, a qualified technician should perform this inspection and potential repair.

Service Bulletin S08NR expires one (1) year from date of issue.

Should you have any questions concerning this bulletin, please contact your Blue Bird dealer.

Sincerely,

Bill Coleman

Bill Coleman
Blue Bird Corporation
478-822-2242
bill.coleman@blue-bird.com

BLUE BIRD

Fan Clutch Spacers

BULLETIN

MODELS AFFECTED: *2008-2009 BBCV Visions w/ 2007 Cat Engines*

S08NR

ISSUE

Fan may separate from fan clutch and may damage fans blades, fan clutch, radiator, hoses and other surrounding components.

CORRECTIVE ACTION

Inspect fan spacer length and install new spacer and bolts as required.

WARNING ***Always follow all Federal, State, Local, and Shop safety standards and use proper safety equipment when performing this procedure.***

INSPECTION

1 Park vehicle on a level surface, apply parking brake, turn engine off, remove ignition key and chock wheels.

2 Disconnect batteries.

3 Open engine hood.

4 Measure the length of the spacer between the fan blade and the fan clutch. See Diagram and Chart to the right for correct installations and determine procedure needed.

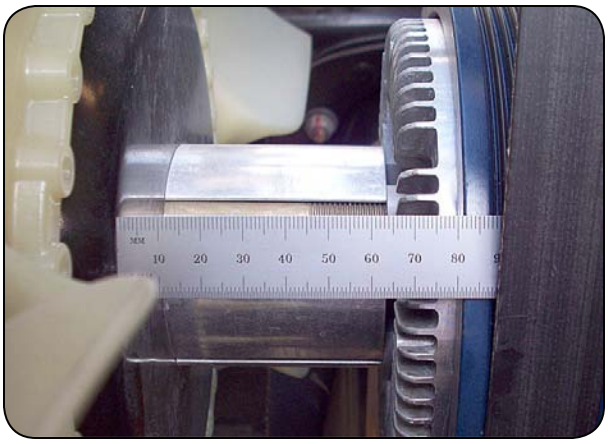

Inspection

PROCEDURE 1 ***(with correct spacer and wrong capscrews)***
For CAT C707 with CGI & DPF, and a 66.7mm (2 5/8 inch) spacer.
Note: Caterpillar C707 with CGI and DPF has a Regen switch mounted on the entrance door side fire wall.

NOTE: ***CAT C707 engines are equipped with Clean Gas Induction (CGI) and a Diesel Particulate Filter (DPF). CAT C7 and Export units are not equipped with CGI and DPF.***

PROCEDURE 2 ***(with wrong spacer and wrong capscrews)***
For CAT C707 with CGI & DPF, and a 52.8mm (2 5/64 inch) spacer.
Note: Caterpillar C707 with CGI and DPF has a Regen switch mounted on the entrance door side fire wall.

PROCEDURE 3 ***(with wrong spacer and wrong capscrews)***
For CAT C7 without CGI & DPF, or Export unit; with a 66.7mm (2 5/8 inch) spacer.

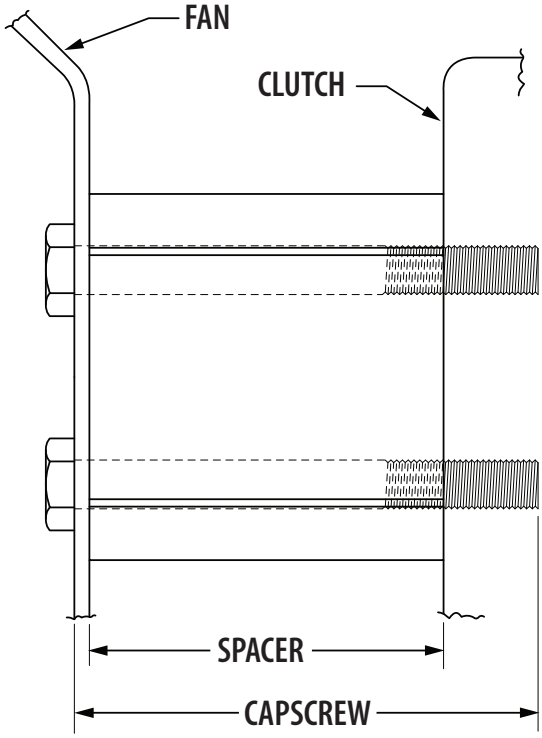

ENGINE	SPACER	CAPSCREW
CAT C707 with CGI & DPF	66.7mm (2 5/8 inches)	90mm M10-1.5 X 90mm
CAT C7 or Export without CGI & DPF	52.8mm (2 5/64 inches)	70mm M10-1.5 X 70mm

SERVICE BULLETIN

BLUE BIRD

BULLETIN

PROCEDURE 1 *(With correct spacer and wrong capscrews.)*

For CAT C707 with CGI & DPF, and a 66.7mm (2 5/8 inch) spacer.
Note: Caterpillar C707 with CGI and DPF has a Regen switch mounted on the entrance door side fire wall.

1 Remove and retain the four nuts attaching the fan shroud to the radiator. Slide the shroud rearward for access to the four capscrews attaching the fan to the fan clutch.

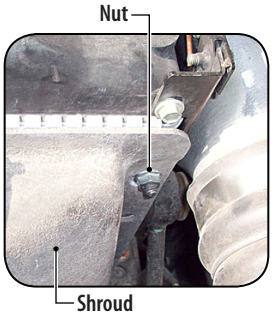

2 Remove the four 80mm capscrews and discard. Retain the four lock washers.

3 Install four 90mm capscrews (Blue Bird #10000385) with four lock washers and torque to 20-25 lb. ft. *Note: Four 90mm capscrews (Blue Bird #10000385) shipped with original Service Bulletin.*

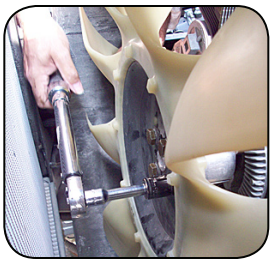

4 Slide fan shroud forward and reattach with four nuts removed in step one.

5 Close engine hood.

6 Reconnect batteries and place the bus back in service.

PARTS LIST

PART NUMBER	QUANTITY	DESCRIPTION
10000385	4	*Capscrew, Hex head, M10-1.5 x 90mm*

Supplied with original Service Bulletin.

PROCEDURE 2 *(With wrong spacer and wrong capscrews.)*

For CAT C707 with CGI & DPF, and a 52.8mm (2 5/64 inch) spacer.
Note: Caterpillar C707 with CGI and DPF has a Regen switch mounted on the entrance door side fire wall.

1 Remove and retain the four nuts attaching the fan shroud to the radiator. Slide the shroud rearward for access to the four capscrews attaching the fan to the fan clutch.

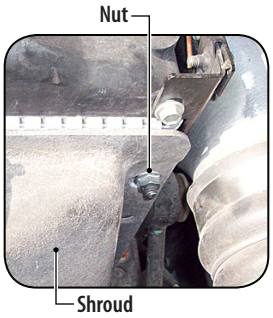

2 Remove and discard the four 80mm capscrews and spacer. Retain the four lock washers.

3 Install new Spacer (Blue Bird #10005240) with four 90mm capscrews (Blue Bird #10000385) and four lock washers. Torque to 20-25 lb. ft.

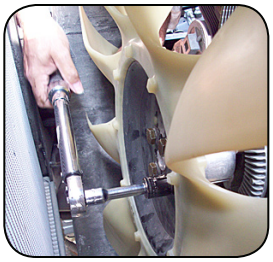

4 Slide fan shroud forward and reattach with four nuts removed in step one.

5 Close engine hood.

6 Reconnect batteries and place the bus back in service.

PARTS LIST

PART NUMBER	QUANTITY	DESCRIPTION
10005240	1	Spacer, Clutch, Fan, Horton, 00115258
10000385	4	**Capscrew, Hex head, M10-1.5 x 90mm**

Order only if not provided

BLUE BIRD

BULLETIN

PROCEDURE 3 *(Export only with wrong spacer and wrong capscrews.)*

For CAT C7 without CGI & DPF, or Export unit; with a 66.7mm (2 5/8 inch) spacer.

1 Remove and retain the four nuts attaching the fan shroud to the radiator. Slide the shroud rearward for access to the four capscrews attaching the fan to the fan clutch.

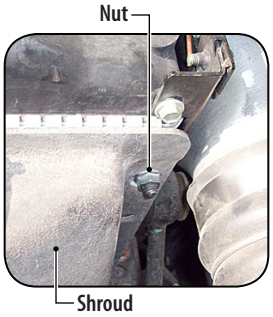

2 Remove and discard the four capscrews and spacer. Retain the four lock washers.

3 Install new Spacer (Blue Bird #10005241) with four 70mm capscrews (Blue Bird #01265990) and four lock washers. Torque to 20-25 lb. ft.

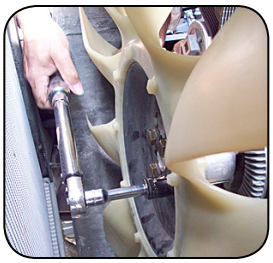

4 Slide fan shroud forward and reattach with four nuts removed in step one.

5 Close engine hood.

6 Reconnect batteries and place the bus back in service.

PARTS LIST

PART NUMBER	QUANTITY	DESCRIPTION
10005241	1	Spacer, Clutch, Fan, Horton, 00068057
01265990	4	Capscrew, Hex head, M10-1.5 x 70mm

BLUE BIRD

FEBRUARY 09, 2010

TO: NORTH AMERICAN DEALERS

SUBJECT: SERVICE BULLETIN S10RD RADIATOR INTERNAL TRANSMISSION OIL COOLER FAILURES

MODELS AFFECTED: 2008-2010 MODEL YEAR "VISION" MODEL BUSES EQUIPPED WITH 2007 ENGINES AND ALLISON 3000 PTS TRANSMISSIONS

The radiator internal transmission oil cooler located on the bottom of the radiator on affected units may crack or burst due to fatigue from high-pressure cycling. In the event this occurs, the mixing of engine coolant and transmission oil will result in eventual engine and/or transmission damage. The radiator internal transmission oil cooler (lower tank) must be removed and replaced according Service Bulletin S10RD. Copy attached.

Time allowed to replace the radiator internal transmission oil cooler (lower tank) engine coolant and transmission oil is 3 hours per bus.

Replacement internal transmission oil cooler must be ordered through Blue Bird Service Parts.

A printout of your buses affected by Service Bulletin S10RD is attached.

Service Bulletin S10RD is being mailed directly to owners. Owners are being advised to contact their dealer for assistance, if needed.

Service Bulletin S10RD ends one (1) year from date of issue. Claims for repairs performed after the end date cannot be submitted to Blue Bird.

Questions regarding Service Bulletin S10RD should be directed to your Blue Bird Service Representative.

Sincerely,

Bill Coleman

Bill Coleman
Engineering Services
Blue Bird Corporation
478-822-2242
bill.coleman@blue-bird.com

BLUE BIRD

February 09, 2010

Dear Blue Bird Owner,

You will find enclosed a copy of Service Bulletin S10RD regarding the radiator internal transmission oil cooler on certain 2008 through 2010 model year Blue Bird "Vision" model buses equipped with 2007 emission engines and Allison 3000 PTS transmission.

The radiator internal transmission oil cooler located on the bottom of the radiator on affected units may crack or burst due to fatigue from high-pressure cycling. In the event this occurs, the mixing of engine coolant and transmission oil will result in eventual engine and/or transmission damage. The radiator internal transmission oil cooler (lower tank) must be removed and replaced according Service Bulletin S10RD. Copy attached.

Your buses affected by Service Bulletin S10RD are identified by Blue Bird body number on the enclosed cover sheet.

Time allowed to replace the radiator internal transmission oil cooler (lower tank), engine coolant and transmission oil is 3 hours per bus.

You will need to contact your Blue Bird dealer to obtain parts specified in Service Bulletin S10RD.

You should contact your Blue Bird dealer to arrange to have Service Bulletin S10RD performed. Or, if you prefer, you may perform Service Bulletin S10RD yourself or have it performed by a qualified repair facility convenient to you. A qualified technician must perform this bulletin. Blue Bird recommends that the actual disassembly/reassembly of the radiator/ transmission cooler be performed by a qualified and appropriately equipped radiator repair facility.

Service Bulletin S10RD ends one (1) year from date of issue.

Should you have any questions concerning this bulletin, please contact your Blue Bird dealer.

Sincerely,

Bill Coleman

Bill Coleman
Engineering Services
Blue Bird Corporation
478-822-2242

BLUE BIRD

Vision Transmission Oil Cooler

BULLETIN

MODELS AFFECTED: 2008 through 2010 Blue Bird Vision

Equipped with Allison PTS 3000 Transmission Built February 1, 2007 through May 17, 2009

S10RD

SERVICE BULLETIN

ISSUE

On affected buses, high pressure cycling may cause the internal transmission oil cooler of radiator assembly 00115577 to fatigue, resulting in transmission oil / engine coolant contamination.

CORRECTIVE ACTION

This procedure removes and disassembles the radiator assembly and replaces the internal transmission oil cooler with a new oil cooler (10016104).

PROCEDURE ALWAYS READ THE ENTIRE PROCEDURE BEFORE PERFORMING

WARNING ***Always follow all federal, state, local, and shop safety standards and use proper safety equipment when performing this procedure.***

1 Secure the vehicle and prepare it for radiator removal:

1.1 Park vehicle on level surface. Apply the parking brake. Remove key and chock the wheels. Disconnect both positive and negative battery cables. Allow the engine to cool.

WARNING ***When disconnecting batteries, remove the negative cable first. When re-connecting batteries, connect the negative cable last.***

CAUTION ***Cover all openings in the engine, transmission, and radiator as they are opened. Plug all removed tubing, hoses and piping to prevent contamination.***

1.2 Remove the drain plug from the bottom of the transmission and drain the tranmission oil into a suitable container.

1.3 Disconnect the two transmission cooler hoses at the bottom of the radiator. Be prepared to contain oil leakage from the transmission cooler and hoses. Cap the open ends of the transmission hoses to prevent contamination of the hoses. Support disconnected hoses out of the way. Remove the 45° and 90° elbows and retain for reinstallation.

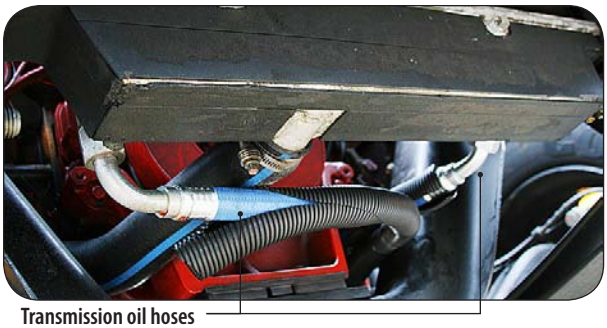

Transmission oil hoses

2 Open both heater circuit valves.

3 Drain the coolant from the petcock at the bottom of the radiator into an appropriate recepticle.

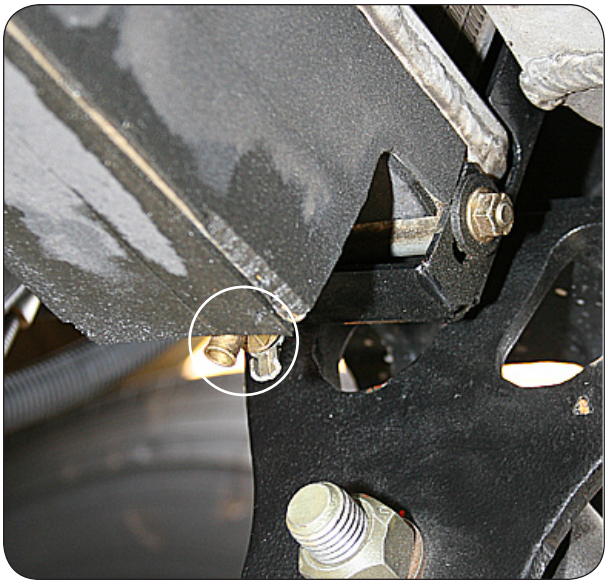

4 Remove the radiator assembly, as follows:

4.1 Open the engine hood to its fully upright position and support it securely so as to avoid damage to the shell when the stop cables are removed.

4.2 Remove the four bolts which mount the top radiator baffle to the top of the radiator.

4.3 Remove the two bolts which mount the left and right radiator baffle panels to the front of the radiator.

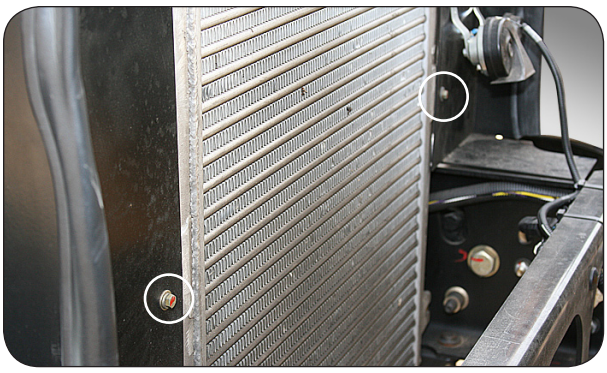

4.4 Carefully lift the three radiator baffle panels (still assembled) out of the way.

4.5 Loosen the clamps of the right and left charge air cooler tubes and remove the tubes.

CAUTION ***Cover the ends of all open ports and tubing ends of the CAC system to prevent contamination.***

4.6 Disconnect the top radiator hose and the small vent hose from the top of the radiator. Secure the disconnected hoses out of the way.

4.7 If the vehicle is equipped with shutters, disconnect the shutter actuator air or oil line from the shutters actuator.

4.8 After removing all the hoses and piping, remove the four hex nuts at the corners of the fan shroud. Pull the shroud as far rearward (over the fan) as possible. Allow the shroud to hang over the fan blades.

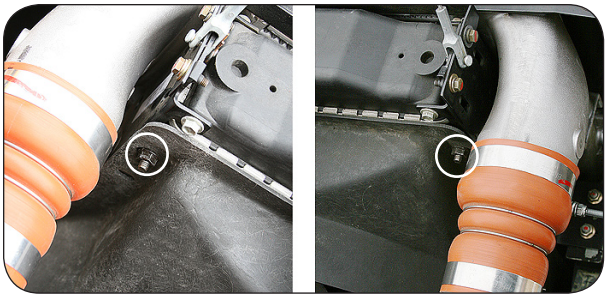

4.9 Remove the bottom radiator coolant hose.

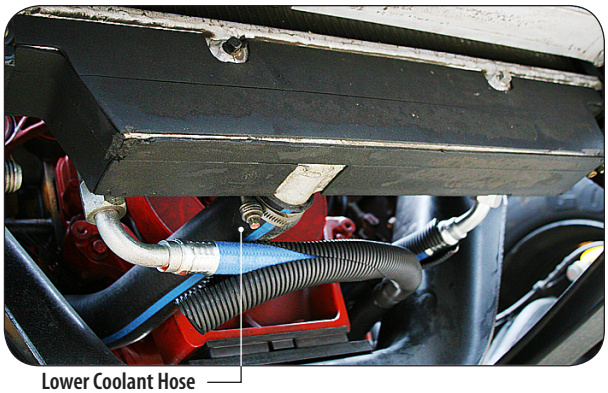

Lower Coolant Hose

4.10 On each side of the radiator, remove the diagonal radiator support strut.

4.11 On each side of the radiator, remove the two nuts which secure the radiator to the rubber isolator blocks.

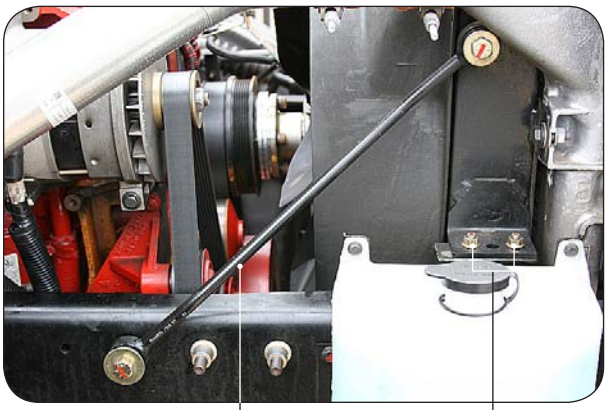

Diagonal Support Strut

Isolator Block Nuts

4.11 Using an overhead hoist, carefully lift the radiator clear of the frame rails. Ensure the fins on the radiator and charge air are protected.

4.12 On each side of the radiator, remove the two bolts which fasten the charge air cooler to the radiator. Set the charge air cooler aside in a safe place.

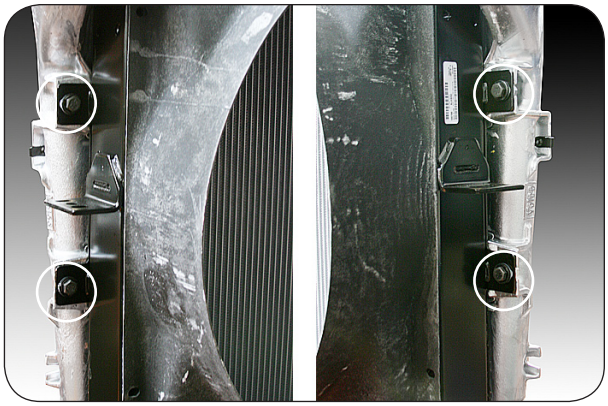

4.13 If the radiator is equipped with shutters, remove the shutters assembly.

5 Blue Bird recommends that the actual disassembly/ reassembly of the radiator / transmission cooler be performed by a qualified and appropriately equipped radiator repair facility. Remove the lower tank from the radiator as follows:

5.1 Mount the radiator core and tanks carefully in a radiator assembly fixture.

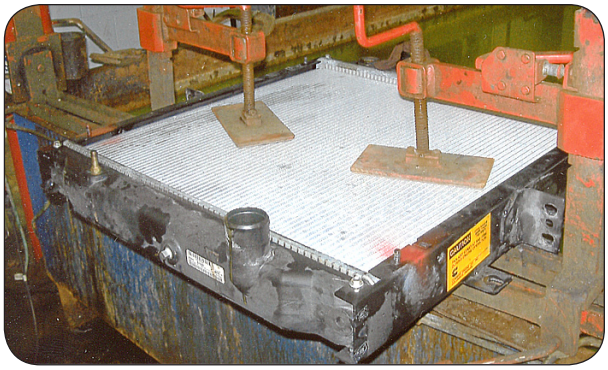

5.2 Position the radiator with the bottom tank upward. Starting near the middle of the radiator's width and working toward the ends, use Johnson Tab Tool 414-01W to bend the crimp strip tabs upward approximately 90°.

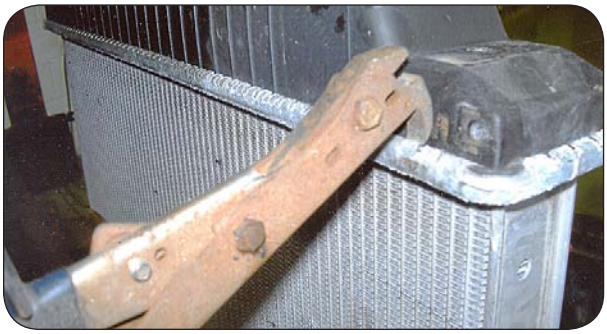

5.3 Remove the two crimp strips and dispose of them. New crimp strips will be used for reassembly.

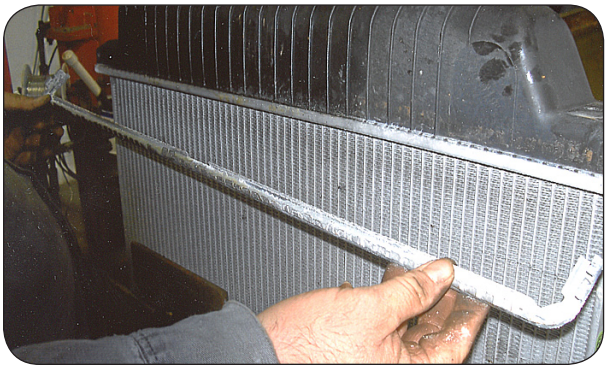

5.4 Carefully separate the plastic tank from the core. The fit is tight and may require some effort to remove. Avoid prying that may damage the sealing groove.

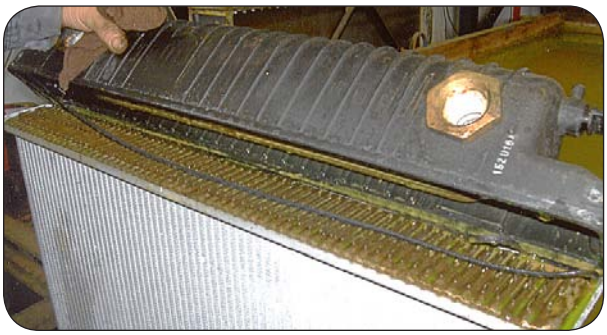

5.5 Remove and dispose of the sealing gasket.

5.6 Using a wire brush, clean away accumulated debris from the sealing groove and cooling tube ends.

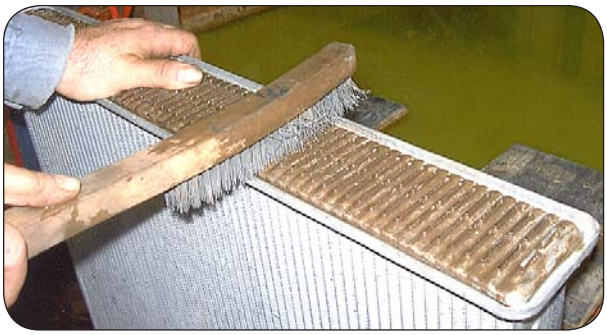

5.7 Lubricate the new gasket with ethylene glycol, and set it carefully in place. Be careful to avoid twisting, cutting or otherwise damaging the gasket.

5.8 With the radiator core securely mounted in the assembly fixture, seat the new plastic tank against the gasket. The fit is tight. Use caution to avoid damage.

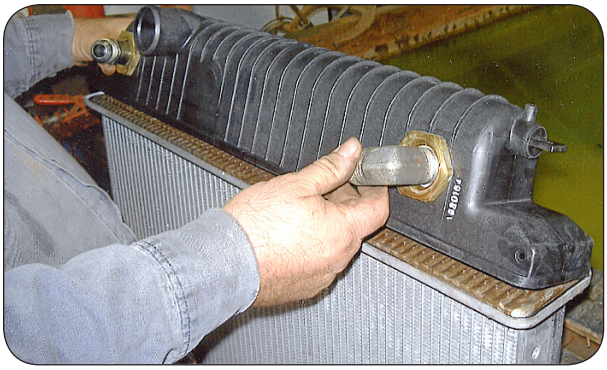

5.9 Install a new crimp strips to each side of the radiator sealing flange. Partially bending one or two tabs to help hold the strip in place is acceptable.

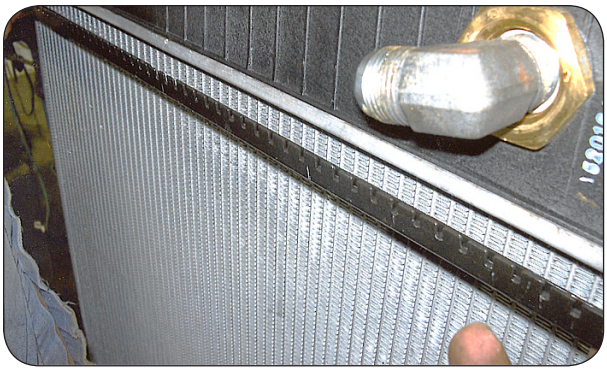

5.10 Using a plastic tank radiator repair fixture, apply uniform pressure to the tank to seat the tank and compress the gasket. Use extreme caution to distribute the clamping force evenly to avoid damage to the tank.

5.11 Starting at the center and progressing toward the ends, pre-crimp the tabs around the tank by partially bending each tab. This helps ensure uniform clamping while avoiding excessive localized stress.

5.12 Bend each tab firmly against the plastic sealing flange. While proceding, take measurements to ensure the crimping strip's height is within the tolerance indicated in the drawing below. Do not attempt to compress the gasket further; doing so risks cracking of the tank.

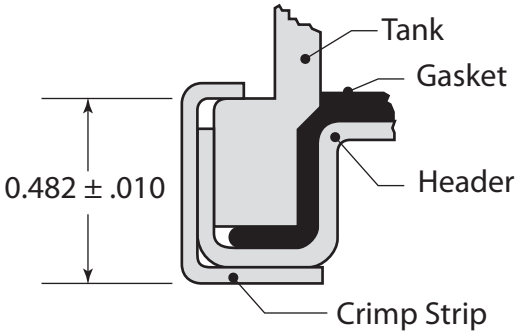

5.13 Test for leaks using air under water at 18 PSI.

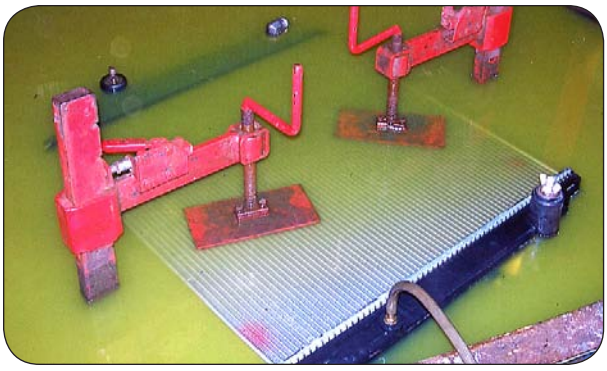

6 Reinstall the radiator by reversing the removal procedure described in step 4. When reinstalling the transmission hose elbow fittings, orient them as shown below:

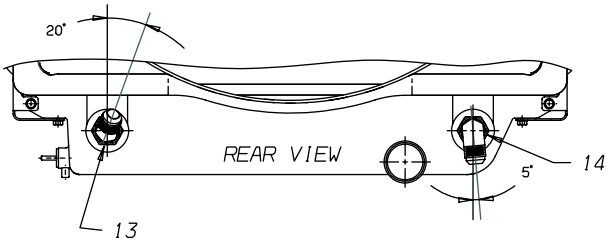

7 Refill the transmission with new Transynd fluid.

8 Referring to Servcie Update S1003 (included) perform the complete cooling system and heating system drain and refill procedure for the appropriate engine. Chemical flush is neither required by this procedure, nor is its cost covered by this Bulletin. Perform the chemical flush only if otherwise required.

TOOLS REQUIRED

- Johnson Tab Tool 414-01
- Radiator service fixture

PARTS

PART NUMBER	QUANTITY	DESCRIPTION
10016104	1	Tank, Lower, Radiator ITOC, Service Part, BBCV
	12.5 gallons	Coolant
00102736	3 gallons	Fluid, Trans, Synthetic, Transynd

Standard & Optional Coolants

UPDATE

MODELS AFFECTED: *All School Bus Models*

ISSUE

Blue Bird has implemented new engine coolant specifications for all buses built upon Blue Bird built chassis with Cummins® engines. These include A3FE (All American Forward Engine), A3RE (All American Rear Engine), D3FE (All American Forward Engine), D3RE (All American Rear Engine), and BBCV (Vision). Optional long life coolant is also available for Cummins® engines on these products.

This update also includes coolant information for the BBCV propane with GM® 8.1 engine.

John Deere® Cool Gard will only be used in John Deere engines.

APPLICATIONS

Standard Equipment Coolant

The table below lists coolant specifications and effectivity dates:

Prior to March 26, 2009

ENGINE	COOLANT LIFE	FEATURE | COOLANT, STANDARD	FEATURE | COOLANT, OPTIONAL
Caterpillar®	Standard	4011107 | John Deere Cool-Gard 50/50 (Green)	4011109 | Caterpillar® ELC 50/50 (Red)
Cummins®	Standard	4011107 | John Deere Cool-Gard 50/50 (Green)	4011108 | Fleet Guard® ES Optimax 60/40 (Red)
John Deere®	Extended	4011107 | John Deere Cool-Gard 50/50 (Green)	
GM®	Extended	4011104 | Havoline Dex-Cool 7995 50/50 (Orange)	

On Or After March 26, 2009

ENGINE	COOLANT LIFE	FEATURE | COOLANT, STANDARD	FEATURE | COOLANT, OPTIONAL
Caterpillar®	Extended	4011109 | Caterpillar® ELC 50/50 (Red)	
Cummins®	Standard	4011111 | Fleetguard ES Optimax 50/50 (Blue)	4011108 | Fleet Guard® ES Optimax 60/40 (Red)
GM®	Extended	4011104 | Havoline Dex-Cool 7995 50/50 (Orange)	

Coolant Filter: Caterpillar & Cummins

On buses equipped with any of the above-listed Caterpillar® or Cummins® engine and also equipped with an optional coolant filter, the same Wix® replacement filter element cartridge is used:

Blue Bird Part Number: 0064641

Wix Part Number: 24070

The coolant filter should be replaced every 6 months or 6,000 miles; whichever occurs first.

Coolant Decals

On buses equipped with any of the above-listed engines, Blue Bird installs a decal stating:

- The type of coolant installed at the factory.
- The coolant manufacturer's part number for one gallon quantity, suitable for regular top-off and refill.
- The coolant manufacturer's part number for one gallon quantity of the concentrate version of the installed coolant, suitable for formulating stronger glycol mixture ratio.

Blue Bird also installs a second decal containing radiator warnings. Both decals are mounted near the coolant fill neck.

COOLANTS

John Deere® Cool-Gard

Green in color.

Standard equipment coolant in all A3FE, A3RE, BBCV, BCCV with Caterpillar, Cummins, and John Deere engines. before March 26, 2009.

On and after March 26, 2009, John Deere Cool-Gard is used for John Deere engines only.

Qualifies as extended-life coolant in John Deere engines.

Considered standard-life coolant in Caterpillar and Cummins engines.

Concentrate version may be mixed with the pre-mix version to lower freezing point.

New John Deere Cool-Gard II may be used with John Deere Cool-Gard.

50/50 Premix	BLUE BIRD NUMBER	JOHN DEERE NUMBER
1 Gallon Container	0109179	TY25081
2 1/2 Gallon Container		TY16036
55 Gallon Drum		TY16037
330 Gallon Tote		TY24504
Concentrate		
1 Gallon Container		TY16034

Caterpillar® ELC

Red in color.

Optional coolant in A3FE, A3RE, BBCV, BCCV with Caterpillar engines.

Qualifies as extended-life coolant in Caterpillar engines.

Blue Bird installs 50/50 premix, which is available in one gallon and larger (listed) containers.

The 50/50 premix may be mixed with the concentrate version per Caterpillar's instructions to achieve 60/40 ratio.

Concentrate version may be mixed with the pre-mix version to lower freezing point.

50/50 Premix	BLUE BIRD NUMBER	CATERPILLAR NUMBER
1 Gallon Container		101-2844
Case of six 1 Gallon Containers	0113986	
55 Gallon Drum		101-2845
275 Gallon Tote		222-1534
Concentrate		
1 Gallon Container	0113987	119-9150

Fleetguard® ES Compleat (March 26, 2009 and later)

Blue in color.

Standard coolant in all Blue Bird buses with Cummins engines.

Blue Bird installs 50/50 premix, which is available in one gallon containers and in larger containers (listed).

The 50/50 premix may be mixed with the concentrate version per Fleetguard's instructions to achieve 60/40 ratio.

Concentrate version may be mixed with the pre-mix version to lower freezing point.

50/50 Premix	BLUE BIRD NUMBER	FLEETGUARD NUMBER
1 Gallon Container		CC2825
55 Gallon Drum		CC2826
275 Gallon Tote		CC2834
Concentrate		
1 Gallon Container		CC2820

Fleetguard® ES Optimax

Red in color.

Optional coolant in A3FE, A3RE, BBCV, BCCV with Cummins engines.

Qualifies as extended-life coolant in Cummins engines.

Blue Bird installs 60/40 premix, which is not available in one gallon containers, but is available in larger containers (listed).

The 50/50 premix may be mixed with the concentrate version per Fleetguard's instructions to achieve 60/40 ratio.

Concentrate version may be mixed with the pre-mix version to lower freezing point.

50/50 Premix	BLUE BIRD NUMBER	FLEETGUARD NUMBER
1 Gallon Container	0109178	CC2785/2785X
60/40 Premix		
55 Gallon Drum		CC2770/2770X
275 Gallon Tote		CC2790/2790X
Concentrate		
1 Gallon Container	0109552	CC2780/2780X

Havoline® DEX-COOL

Orange in color.

Standard coolant in BBCV Propane with GM 8.1 engine.

Qualifies as extended-life coolant.

Blue Bird installs 50/50 premix, which is available in one gallon containers, and in larger containers (listed).

The 50/50 premix may be mixed with the concentrate version per Havoline instructions to achieve 60/40 ratio.

Concentrate version may be mixed with the pre-mix version to lower freezing point.

50/50 Premix	BLUE BIRD NUMBER	HAVOLINE NUMBER
Gallon		7995
Concentrate		
Gallon		7994

COOLANT MAINTENANCE

Blue Bird advises strictly abiding by the following policy for all coolant maintenance for the life of the vehicle:

Never Mix Coolant Types
Routine coolant addition (top-off) must match the installed coolant type and brand. Do not mix coolants of different colors, types, or brands in the same engine.

Strictly Follow The Engine Manufacturer's Specifications
Each engine manufacturer publishes its own specific requirements for testing and maintaining coolant in their respective engines. Blue Bird recommends strictly abiding by the engine manufacturer's testing and maintenance schedules and draining, flushing, refilling procedures to maintain compliance with the engine warranty requirements. Blue Bird further recommends that you maintain accurate vehicle-specific service records of all coolant system maintenance procedures performed.

For Caterpillar or Cummins engines equipped with John Deere Cool-Gard coolant, follow the engine manufacturer's maintenance schedules for standard-life coolant, not for extended-life coolant.

For Caterpillar engines using Caterpillar ELC extended life coolant, perform testing at a qualified coolant laboratory per the Caterpillar Operation and Maintenance Manual. Label sample as Extended-Life coolant.

For Cummins engines using Fleetguard ES Compleat coolant, send coolant samples to Fleetguard for Monitor C testing, as specified in the Cummins Operator's Manual. Label sample as Conventional coolant.

For Cummins engines using Fleetguard ES Optimax extended-life coolant, send coolant samples to Fleetguard for Monitor C testing, as specified in the Cummins Operator's Manual. Label sample as Extended-Life coolant.

For Caterpillar, Cummins, or John Deere engines using John Deere Cool-Gard coolant, send coolant samples to a John Deere lab for Cool Scan testing; or test manually using a John Deere Three-Way test strip, supplied in John Deere 3-Way Heavy Duty Coolant Test Kit TY6175.

The cost of testing is the owner's responsibility as part of the engine manufacturer's requirements for cooling system maintenance. If a test indicates a coolant defect, the dealer may submit a preapproval claim (either warranty or policy), with the test report and bus coolant service records attached, before any repairs are performed. As with all warranty and policy claims, defective parts must be retained until the claim has been paid. Dealers and/or owners should retain at least one gallon of the drained coolant until the claim is paid, in case Blue Bird, or the engine manufacturer, or the coolant manufacturer requires further testing.

Always Mix Concentrate With Premix Coolant, Not Water
If concentrated coolant is added in order to raise the glycol ratio, use only the concentrate version of the same premix coolant type and brand as installed. Do not mix the concentrate with water. Instead, mix the concentrate with the premix version of the same coolant.

Only Add Tap Water In Emergency Situations
A regularly-scheduled bus inspection and maintenance program should be followed to prevent coolant losses due to damaged or worn hoses, loose clamps, etc.
If coolant is lost while the bus is in use, and roadside emergency measures are called for, replenish the coolant with the same premix type and brand if possible. If the proper coolant is not available, and water must be used, use only de-ionized water if possible. Ordinary tap water should only be used if proper coolant or de-ionized water are not available.
Whenever tap water has been added, the bus should be taken to a service facility and the entire cooling system should be completely drained, flushed, and refilled with premix coolant.

COOLANT SYSTEM FLUSH & REFILL FOR A3FE, A3RE, AND BBCV WITH CATERPILLAR® ENGINE

Always read the entire procedure before performing. Blue Bird recommends the flush and refill procedure for Caterpillar engines being performed by an authorized Caterpillar dealer/distributor.

CAUTION ***After acid type cleaners such as those mentioned in this procedure are used, the system must be flushed with fresh water 3 to 5 times to ensure complete removal of the cleaner from the system. If cleaner is not completely removed, ammonia salt residue may remain and severe copper corrosion can occur.***

CAUTION ***If differences between instructions in this Service Update and the engine manufacturer's Operation and Maintenance Manuals are encountered, the engine manufacturer's information takes precedence.***

1 Follow Caterpillar's instruction in the *Caterpillar Operation and Maintenance Manual* for chemically flushing the entire cooling system.

If the engine cooling system is contaminated by sludge or oil, the system should be flushed with Caterpillar's 30-Day cleaner. If the engine cooling system is contaminated by scale and deposits the system should be flushed with Caterpillar Quick Flush cleaner.

2 After the engine has been stopped and the cooling system has cooled, perform **Procedure 1: Cooling and Heater System Drain,** included in this Service Update.

3 Rinse the cooling system with fresh water three to five times, as follows:

3.1 Open all heater circuit valves.

3.1 Fill the system with fresh water.

3.3 Start the engine. Turn on the heater system pumps.

3.4 Run the engine for a minimum of 30 minutes at high idle with heater pumps on and all heater valves open.

3.5 Turn off the engine and allow it to cool completely.

3.6 After the cooling system has cooled, again perform **Procedure 1: Cooling and Heater System Drain** through Step 2.4.

3.7 With the hoses disconnected and the drain valves open, run fresh water through the heater system, radiator, transmission cooler, and engine until the water is clear.

3.8 Perform **Procedure 1: Cooling and Heater System Drain** Step 3.

3.9 Repeat Steps 2 through 3 of this procedure as many times as required to ensure that the system is clean and the flush chemicals are completely removed.

4 If the bus is equipped with a coolant filter, thoroughly clean the filter head and lines, removing all of the old coolant and residue. Reinstall the filter assembly. Install a new coolant filter element.

5 Perform the coolant refill procedure for Caterpillar engines, as follows:

5.1 Install Caterpillar® ELC Premixed 50/50 following Caterpillar instructions in the Caterpillar Operation and Maintenance Manual.

5.2 Operate engine to open thermostats and allow the air to escape from the system. If the coolant level drops when the thermostats open or during bleeding of the heater system, stop and add premix coolant.

6 Perform **Procedure 2: Heater System Bleeding** to bleed trapped air from the heater system.

7 After operating the bus for approximately 30 days, submit samples of the installed coolant to a coolant laboratory equipped to perform a Caterpillar SOS Level 2 coolant test, to ensure that the system is free of heavy metals contamination, that the cleaner has been completely removed, and that the corrosion protection and glycol levels are correct.

After the 30 day test, resume the regular testing schedule as specified by the engine manufacturer.

COOLANT SYSTEM FLUSH & REFILL FOR BBCV, A3FE, & A3RE WITH CUMMINS® ENGINE

Always read the entire procedure before performing. Blue Bird recommends that the flush and refill procedure for Cummins® engines is performed by an authorized Cummins dealer/distributor.

CAUTION ***After acid type cleaners such as those mentioned in this procedure are used, the system must be flushed with fresh water 3 to 5 times to ensure complete removal of the cleaner from the system. If cleaner is not completely removed, ammonia salt residue may remain and severe copper corrosion can occur.***

CAUTION ***If differences between instructions in this Service Update and the engine manufacturer's Operation and Maintenance Manuals are encountered, the engine manufacturer's information takes precedence.***

1. Follow Cummins instruction for chemically flushing the entire cooling system.

If the engine cooling system is contaminated by sludge or oil, the system should be flushed with Restore. If the engine cooling system is contaminated by scale and deposits the system should be flushed with Restore Plus.

2 After the engine has been stopped and the cooling system has cooled, perform **Procedure 1: Cooling and Heater System Drain,** included in this Service Update.

3 Rinse the cooling system with fresh water three to five times, as follows:

3.1 Open all heater circuit valves.

3.1 Fill the system with fresh water.

3.3 Start the engine. Turn on the heater system pumps.

3.4 Run the engine for a minimum of 30 minutes at high idle with heater pumps on and all heater valves open.

3.5 Turn off the engine and allow it to cool completely.

3.6 After the cooling system has cooled, again perform **Procedure 1: Cooling and Heater System Drain** through Step 2.4.

3.7 With the hoses disconnected and the drain valves open, run fresh water through the heater system, radiator, transmission cooler, and engine until the water is clear.

3.8 Perform **Procedure 1: Cooling and Heater System Drain** Step 3.

3.9 Repeat Steps 2 through 3 of this procedure as many times as required to ensure that the system is clean and the flush chemicals are completely removed.

4 If the bus is equipped with a coolant filter, thoroughly clean the filter head and lines, removing all of the old coolant and residue. Reinstall the filter assembly. Install a new coolant filter element.

5 Perform the coolant refill procedure for Cummins engines, as follows:

5.1 Install Fleet Guard ES Optimax Ethylene Glycol Premixed 50/50 following Cummins instructions.

5.2 Operate engine to open thermostats and allow the air to escape from the system. If the coolant level drops when the thermostats open or during bleeding of the heater system, stop and add premix coolant.

6 Perform **Procedure 2: Heater System Bleeding** to bleed trapped air from the heater system.

7 After operating the bus for approximately 30 days, submit samples of the installed coolant to a coolant laboratory equipped to perform a Monitor C Cummins Fleet Guard coolant test, to ensure that the system is free of heavy metals contamination, that the cleaner has been completely removed, and that the corrosion protection and glycol levels are correct.

After the 30 day test, resume the regular testing schedule as specified by the engine manufacturer.

COOLANT SYSTEM FLUSH & REFILL FOR A3RE WITH JOHN DEERE ENGINE

Always read the entire procedure before performing. Blue Bird recommends that the flush and refill procedure for John Deere engines is performed by an authorized John Deere dealer/distributor.

CAUTION ***After acid type cleaners such as those mentioned in this procedure are used, the system must be flushed with fresh water 3 to 5 times to ensure complete removal of the cleaner from the system. If cleaner is not completely removed, ammonia salt residue may remain and severe copper corrosion can occur.***

CAUTION ***If differences between instructions in this Service Update and the engine manufacturer's Operation and Maintenance Manuals are encountered, the engine manufacturer's information takes precedence.***

1 With the engine fully cooled, remove the engine thermostat.

CAUTION ***The engineThermostats must be removed to allow entire cooling system to be flushed.***

1.1 Remove the engine thermostat cover.

1.2. Remove the thermostats from the engine.

1.3 Reinstall the thermostat cover and gasket, tightening the three cover cap screws to 47 Nm (35 lb-ft).

1.4 If the engine is equipped with a coolant filter, close the coolant filter valve. Remove the coolant filter.

2 Fill the cooling system with clean water and Fleetguard® Restore Plus™. Refer to the manufacturer's instructions on the cleaner label for correct mixture.

2.1 Run engine for one hour on high idle with the heater pump on and all valves open.

2.2 Stop the engine and allow to it to cool for 10 minutes.

2 After the engine has been stopped and the cooling system has cooled, perform **Procedure 1: Cooling and Heater System Drain,** included in this Service Update.

3 Rinse the cooling system with fresh water three to five times, as follows:

3.1 Open all heater circuit valves.

3.1 Fill the system with fresh water.

3.3 Start the engine. Turn on the heater system pumps.

3.4 Run the engine for a minimum of 30 minutes at high idle with heater pumps on and all heater valves open.

3.5 Turn off the engine and allow it to cool for 10 minutes.

3.6 After the cooling system has cooled, again perform **Procedure 1: Cooling and Heater System Drain** through Step 2.4.

3.7 With the hoses disconnected and the drain valves open, run fresh water through the heater system, radiator, transmission cooler, and engine until the water is clear.

4 Disconnect these additional connections and flush thoroughly with clean water:

4.1 Remove one heater hose at the transmission cooler and run clean fresh water into the heater hose to the bus heater.

4.2 Remove the hose from the bottom of the surge tank. Fill the tank with allow to fill and drain.

4.3 At the radiator, remove the tube leading to the therostat housing. Flush into the engine and into the radiator.

4.4 Remove the hose at the air compressor and flush.

4.5 At the coolant filter, open the filter valves and flush up into the ports at the filter flange.

5. Run shop air through the system (15 PSI maximum) at following locations until all water is expelled:

5.1 Blow through the heater hoses.

5.2 At the air compressor, open the petcock located below the coolant pump to also drain the engine block.

CAUTION ***All chemical flush must be completely removed. If the water is not clear, repeat steps 3 through 5 as required.***

6 Reinstall all hoses to engine block, transmission cooler, surge tank, and radiator.

3.8 Perform **Procedure 1: Cooling and Heater System Drain** Step 3.

7 If the bus is equipped with an engine coolant filter, install a new filter element.

8 Install new thermostats as follows:

8.1 Remove the thermostat cover and install new thermostats into engine block with new gasket.

8.2 Reinstall the thermostat cover and tighten the three cover cap screws to 47 Nm (35 lb-ft).

9 Perform the coolant refill procedure for John Deere engines, as follows:

9.1 Open the bleeder valuve located near the surge tank.

9.1 Fill cooling the system with approximately 14 gallons of John Deere Premixed 50/50 COOL-GARD coolant.

9.3 With the heater valves open and the heater pump on, run the engine on high idle. As air bleeds from the syste, add coolant as necessary. Drive the vehicle on the road for 10-15 minutes, recheck the coolant level, and replenish as required.

CAUTION ***All air must be expelled from the cooling system. Open bleeder valve located near side of surge tank when filling system. Close valve when all air has been expelled.***

10 After the correct coolant level has been reached, allow the bus to cool. Remove a coolant sample from the radiator petcock for testing.

- Test John Deere COOL-GARD coolant with a John Deere 3 WAY Heavy Duty test strip. **Check expiration date on the test strips before using.** If the coolant does not meet John Deere requirement on the test kit chart, follow John Deere recommendation for correcting the coolant mixture.
- An alternate method is to check glycol level with a refractometer to be sure the percentage of glycol is correct.

11 Perform **Procedure 2: Heater System Bleeding** to bleed trapped air from the heater system. After the coolant level is correct, pressure test the cooling system for leaks.

12 After operating the bus for approximately 30 days, submit samples of the installed coolant to a coolant laboratory equipped to perform a John Deere Cool Scan coolant test, to ensure that the system is free of heavy metals contamination, that the cleaner has been completely removed, and that the corrosion protection and glycol levels are correct.

After the 30 day test, resume the regular testing schedule as specified by the engine manufacturer.

PROCEDURE 1: COOLING AND HEATER SYSTEM DRAIN

Always read the entire procedure before performing.

CAUTION ***If differences between instructions in this Service Update and the engine manufacturer's Operation and Maintenance Manuals are encountered, the engine manufacturer's information takes precedence.***

1. Prepare the bus for draining the coolant, as follows:

1.1 Park bus on a level surface, apply parking brake and chock the wheels. Turn off the engine, remove ignition key.

1.2 Locate and open all heater valves for flushing the entire cooling system. All heater valves must be open in order to completely drain the system.

1.3 Run the engine on high idle with heater valves open and heater pump on until normal operating temperature is achieved.

1.4 Turn off the engine, remove ignition key. Allow the engine to cool completely.

2. Drain and discard the coolant, as follows:

WARNING ***Sudden release of fluids from a pressurized cooling system can cause serious burns. Do not remove the radiator cap when the engine is running. Remove the filler cap only when cool enough to touch with bare hands. Slowly loosen cap to its first stop to relieve pressure, before removing completely. Ensure that the cooling system is cool before draining and flushing.***

2.1 If the system is equipped with a coolant filter, close the valves to the filter and remove the filter.

2.2 Position a coolant drain pan under the radiator drain. Open the radiator cap. Remove the radiator drain plug.

WARNING ***Engine coolant is toxic and is an eye and skin irritant. Protective gear should be worn when working with coolant. Engine coolant is a threat to the environment. Use appropriate containers for disposal. Observe all applicable federal, state, and local laws when disposing of coolant.***

2.3 After the system has drained, remove both the pressure and return heater hoses. Use a shop air hose set at a maximum of 15 PSI, to blow the remaining coolant from the heater system.

2.4 Position a coolant drain pan under the lowest drain port or plug on the engine to drain any remaining coolant.

If the engine is a John Deere® engine, open the drain valve below the coolant pump and attach a drain hose to the fitting.

Removal of the thermostat may assist in draining. Follow the engine manufacturer's recommendation regarding thermostat removal and installation.

3 After draining is complete, close all drains. Reinstall the heater hoses removed in Step 2.3. Reinstall all plugs that have been opened or removed. Reinstall thermostats that were removed following engine manufacturer's procedures.

PROCEDURE 2: HEATER SYSTEM BLEEDING

After flushing and refilling the coolant system, perform this procedure to remove trapped air from the heater system. Always read the entire procedure before performing.

CAUTION ***Only replenish coolant with the same premix coolant as installed. Do not top off coolant level with water or other brand coolants. Do not mix coolant brands or colors.***

1. Prepare the bus, as follows:

1.1 Park bus on a level surface, apply parking brake. Turn off the engine, remove ignition key. Chock the wheels.

1.2 Locate and open all heater valves.

1.3 With the heater pump on, run the engine on high idle until normal operating temperature is achieved.

1.4 Turn off the engine, remove ignition key. Allow the engine to cool completely.

2 With the engine stopped and a cool engine, remove the radiator cap. Locate the ¼" black bleeder tube. Place the open end of the bleeder tube into the filler neck of the deaeration tank, and open the bleeder valve.

3 Bleed the system as follows:

3.1 Start engine and operate at 1800 to 2000 rpm until all air has been purged from the system. Using the same 50/50 premix coolant as installed, replenish the coolant to maintain the coolant level.

3.2 After all air has been purged, and a solid stream of coolant is evident, close the bleeder valve and store the bleeder line. Reinstall the radiator cap.

4 Operate the engine until the thermostats open. Stop and let engine cool. Recheck coolant levels and top off the approved 50/50 premixed coolant.

If the coolant level drops during bleeding of the heater system, stop the engine and add the same engine-appropriate premix coolant as installed.

5 After bleeding the heater system, allow the system to cool. Check the coolant level in the deaeration tank. If required, top off with the same engine-appropriate premix coolant installed. Run the engine again until the thermostats open to mix the new added coolant.

6 Turn off the engine and wait 15-30 minutes. Drain a coolant sample from the bottom of the radiator. Test the sample with a refractometer to verify the glycol level is 50%. If the glycol level is less than 50%, drain the appropriate amount of coolant and add the concentrated version of the same type of coolant as installed, according to the engine manufacturer's procedure for increasing glycol percentage to the correct level.

7 When the system has been successfully bled and the coolant level remains at the correct level, pressure test the cooling system for leaks. If no leaks are found, the bus may be returned to normal service.

BLUE BIRD

May 26, 2010

TO: AFFECTED DEALERS

SUBJECT: SERVICE BULLETIN S10RY INTERMOTIVE GUARDIAN II LIFT INTERLOCK WIRING

MODELS AFFECTED: 2007-2011 MODEL YEAR MICRO BIRD

Certain 2007-2011 model year Micro Bird buses equipped with InterMotive Guardian II lift interlock wiring were manufactured with the interlock wiring connected direct to ignition power. The interlock circuit must be connected to fused battery power. Instructions for correct interlock wiring are attached in Service Bulletin S10RY.

Time allowed to perform Service Bulletin S10RY is 0.2hrs (12 minutes) per bus.

No parts are required to perform Service Bulletin S10RY.

A printout of your buses affected by Service Bulletin S10RY is attached.

Service Bulletin S10RY is being mailed direct to owners. Owners are being advised to contact their dealer for assistance, if needed.

Service Bulletin S10RY ends one (1) year from date of issue. Claims for repairs performed after the end date cannot be submitted to Blue Bird.

Questions regarding Service Bulletin S10RY should be directed to your Blue Bird Service Representative.

Sincerely,

Bill Coleman

Bill Coleman
Engineering Services
Blue Bird Corporation
478-822-2242
bill.coleman@blue-bird.com

Table of Contents

BLUE BIRD

May 26, 2010

Dear Blue Bird Owner,

You will find enclosed a copy of Service Bulletin S10RY regarding the lift door interlock wiring on your 2007-2010 model year Blue Bird Micro Bird buses equipped with InterMotive Guardian II Lift Interlock. Your buses affected by S10RY are identified by body number on the enclosed cover sheet.

The subject buses were manufactured with the lift interlock wiring connected direct to ignition power. The interlock circuit must be connected to fused battery power. Instructions for correct interlock wiring are attached in Service Bulletin S10RY.

Time allowed to perform Service Bulletin S10RY is 0.2hrs (12 minutes) per bus.

No parts are required to perform Service Bulletin S10RY.

You may contact your Blue Bird dealer to arrange to have this service bulletin performed. Or, if you prefer, you may perform this service bulletin yourself or have a qualified repair facility convenient to you perform it. A qualified technician should perform this procedure.

Service Bulletin S10RY ends one (1) year from date of issue.

Should you have any questions concerning this bulletin, please contact your Blue Bird dealer.

Sincerely,

Bill Coleman

Bill Coleman
Engineering Services
Blue Bird Corporation
478-822-2242
bill.coleman@blue-bird.com

INTERMOTIVE GUARDIAN II LIFT INTERLOCK POWER SOURCE

BULLETIN

Models Affected: 2007 - 2010 MICROBIRD Equipped With Feature 31048-07 Guardian II Lift Interlock

ISSUE

Some buses equipped with the Intermotive Guardian II lift interlock system were incorrectly built with circuit 2502B (Red Wire) connected to ignition power.

CORRECTIVE ACTION

Inspect buses equipped with the Intermotive Guardian II lift interlock system. Buses with circuit 2502B (Red Wire) connected to ignition power will be rewired to battery power.

PROCEDURE

WARNING: Always follow all Federal, State, Local and Shop safety standards and use proper safety equipment when performing these procedures.

1. Park the bus on a level surface, apply parking brakes, turn off engine and remove ignition key. Chock wheels.

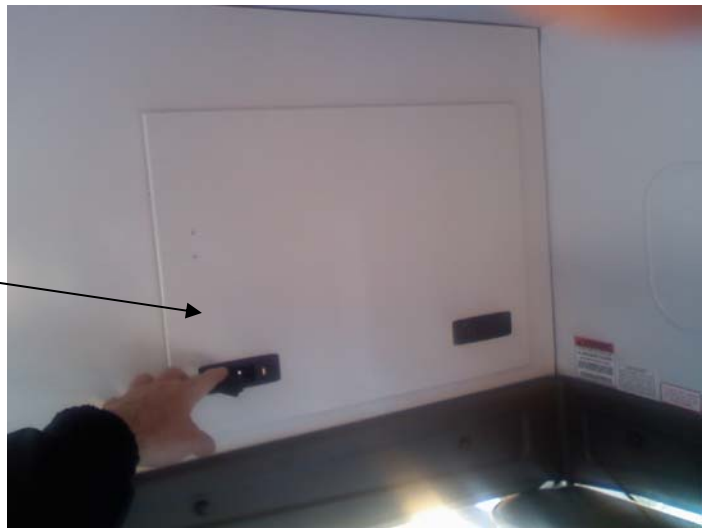

2. Unlatch and open access door above the driver seat. (See above photo)

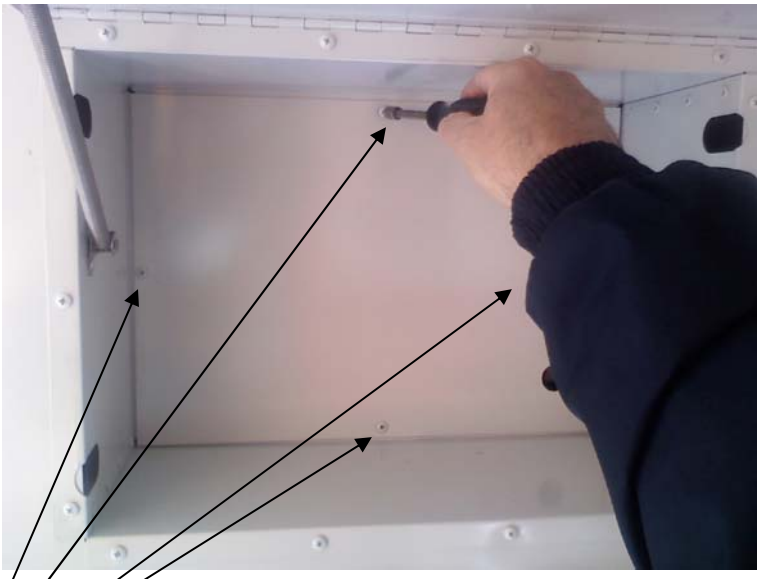

Remove Screws

3. Remove four screws that attach cover at rear of driver compartment. (See above photo)

Example: 2502B And 10 Amp Breaker Connected to Ignition Powered Position.

4. Inspect circuit 2502B and determine if it is supplied by ignition or battery power. With ignition key OFF verify voltage on circuit 2502B with a meter or test light.

5. If circuit 2502B is supplied by battery power, no further action required. Replace cover and place bus back in service.

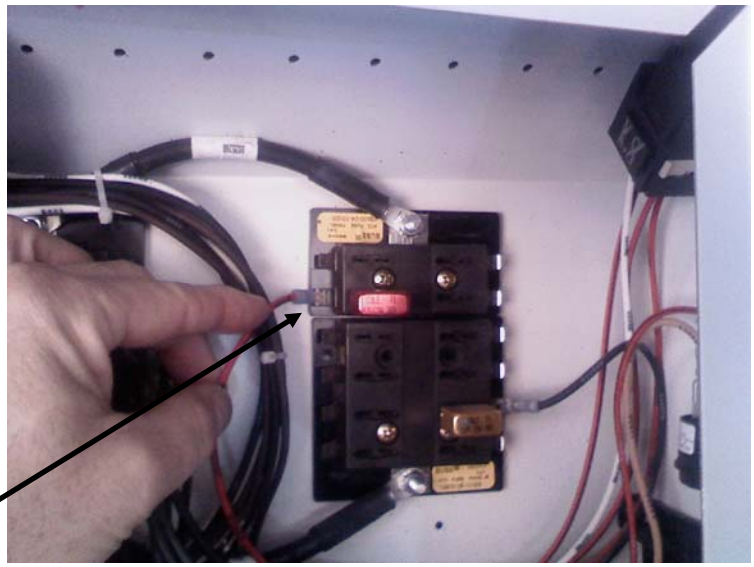

Example: 2502B And 10 Amp Breaker Relocated to Battery Powered Position.

6. If circuit 2502B is supplied by ignition power, relocate circuit 2502B and ten amp circuit breaker to any available fuse panel position that has battery power.

7. Verify feature operation: This lift interlock feature is a purchased system by Intermotive Products which consists of a control module, interface harness and a dash mounted display. The interface harness is used to connect to the bus body circuits and the Ford or GM chassis. The display monitors the inputs required from the chassis and the body to activate the lift. The inputs required to activate the lift are:
   1) Body ignition "on"
   2) Lift power switch "on"
   3) Park brake "set"
   4) Shifter is in the "park" position
   5) Lift door is "unlocked"
   After the lift is activated an output from the Intermotive module will keep the Ford or GM chassis from shifting (interlocked).
   This system meets FMVSS 403/404

8. Replace cover and place bus back in service.

BLUE BIRD

JUNE 15, 2010

TO: **BLUE BIRD DEALERS**

SUBJECT: **SERVICE BULLETIN S10SA LOW COOLANT SENSOR LEAKS**

MODELS AFFECTED: 2007-2011 MODEL YEAR ALL AMERICAN, VISION

The low coolant sensor on certain 2007-2011 model year All American and Vision buses manufactured from February 15, 2007 through March 01, 2010 may leak allowing engine coolant from the surge tank to leak into the engine harness connector and wick through harness to other components such as the engine ECM. Instructions for inspecting and correcting this condition are provided in Service Bulletin S10SA.

Time allowed to inspect low coolant sensor, remove seal and apply dielectric grease is 0.1 hour per bus.

Time allowed to inspect and replace low coolant sensor and replace engine harness, if needed, is 2 hours per bus. **If new sensor is installed, connector seal is not removed.**

Parts, if needed, for Service Bulletin S10SA must be ordered through Blue Bird Service parts.

A printout of your buses affected by Service Bulletin S10SA is attached.

Service Bulletin S10SA is being mailed direct to owners. Owners are being advised to contact their dealer for assistance, if needed.

Service Bulletin S10SA ends one (1) year from date of issue. Claims for repairs performed after the end date cannot be submitted to Blue Bird.

Questions regarding Service Bulletin S10SA should be directed to your Blue Bird Service Representative.

Sincerely,

Bill Coleman

Bill Coleman
Engineering Services
Blue Bird Corporation
478-822-2242
bill.coleman@blue-bird.com

Table of Contents

BLUE BIRD

June 15, 2010

Dear Blue Bird Owner,

The low coolant sensor on certain 2007-2011 model year All American and Vision buses manufactured from February 15, 2007 through March 01, 2010 may leak allowing engine coolant from the surge tank to leak into the engine harness connector and wick through harness to other components such as the engine ECM. Instructions for inspecting and correcting this condition are provided in Service Bulletin S10SA.

Your buses affected by Service Bulletin S10SA are identified by body number on the attached cover sheet.

Time allowed to inspect low coolant sensor, remove seal and apply dielectric grease is 0.1 hour per bus.

Time allowed to inspect and replace low coolant sensor and replace engine harness, if needed, is 2 hours per bus. **If new sensor is installed, connector seal is not removed.**

Parts, if required, must be ordered through your Blue Bird dealer.

You may contact your Blue Bird dealer to arrange to have this service bulletin performed. Or, if you prefer, you may perform this service bulletin yourself or have a qualified repair facility convenient to you perform it. A qualified technician should perform this procedure.

Service Bulletin S10SA ends one (1) year from date of issue.

Should you have any questions concerning this bulletin, please contact your Blue Bird dealer.

Sincerely,

Bill Coleman

Bill Coleman
Engineering Services
Blue Bird Corporation
478-822-2242

Low Coolant Sensor Leaks BULLETIN

Models Affected: 2007-2010 Model Year All American, Vision

ISSUE

The low coolant sensor may leak allowing engine coolant from surge tank to leak into engine harness connector and wick through harness to other components such as engine ECM.

CORRECTIVE ACTION

Inspect low coolant sensor and associated electrical connections and follow instructions provided.

PROCEDURE

WARNING: Always follow all Federal, State, Local and Shop safety standards and use proper safety equipment when performing these procedures. This procedure must be performed by a qualified automotive electrical technician.

1. Secure the vehicle and prepare it for access to the needed area.

2. Park vehicle on level surface. Apply the parking brake, remove key and chock wheels. Disconnect the batteries.

3. Locate low coolant sensor installed in engine coolant surge tank (See figure 1)

Figure 1

4. Disconnect the wiring harness connector from the low coolant sensor.

4.1 Inspect harness connector and sensor pins for signs of coolant.

4.2 If no sign of coolant is found, slide sensor harness connector rubber seal off connector (see seal in figure 2), apply dielectric grease to the connector pins and reconnect the low coolant sensor connector to the sensor without the seal installed and proceed to step 5. Retain harness connector rubber seal for future use if needed.

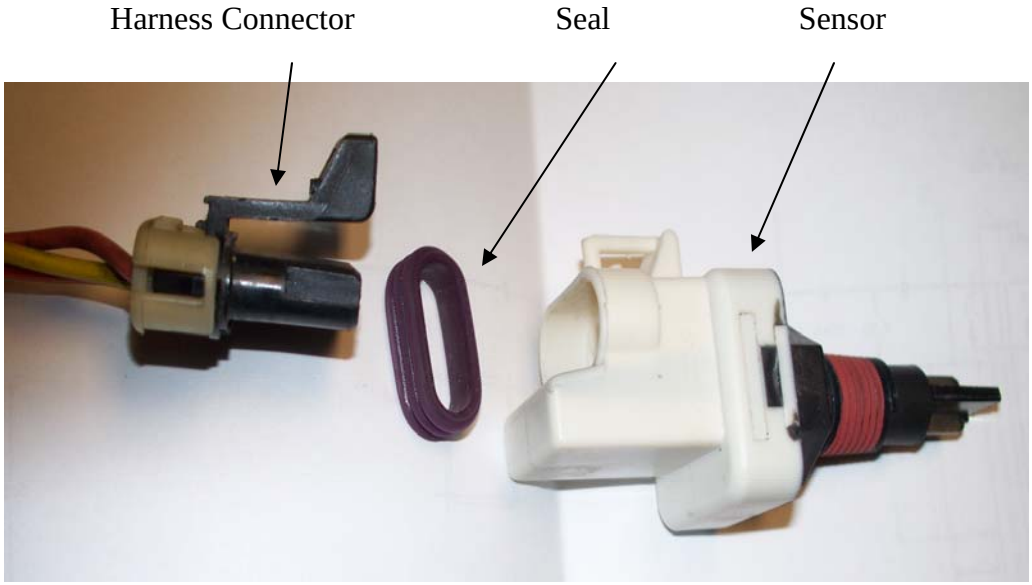

Figure 2

4.3 If sign of coolant is found in the connector or sensor pins (see figure 3), replace the leaking sensor with new sensor (10015356). When installing the new sensor, tighten the sensor using the hex nut portion of the sensor to 4.5-6 ft lbs. Clean the harness connector pins, and reconnect low coolant sensor connector to sensor. **If new sensor is installed, connector seal is not removed.**

Figure 3

4.4 Disconnect engine harness connector at the engine ECM and inspect for coolant.

4.5 If no coolant is found in the ECM connector or ECM, reconnect the engine ECM connector and torque the center retaining bolt of the ECM harness connector per the following values:

Caterpillar Engine- 53 in-lb +/- 9 in-lb
Cummins Engine- 25 in-lb +/- 2 in-lb

4.6 Proceed to step 5.

4.7 If coolant is found in the ECM connector (See Figure 4) or ECM, clean the ECM pins and replace the Blue Bird ECM harness. Reconnect the engine ECM connector and torque the center retaining bolt of the ECM harness connector per the following values:

Caterpillar Engine- 53 in-lb +/- 9 in-lb
Cummins Engine- 25 in-lb +/- 2 in-lb

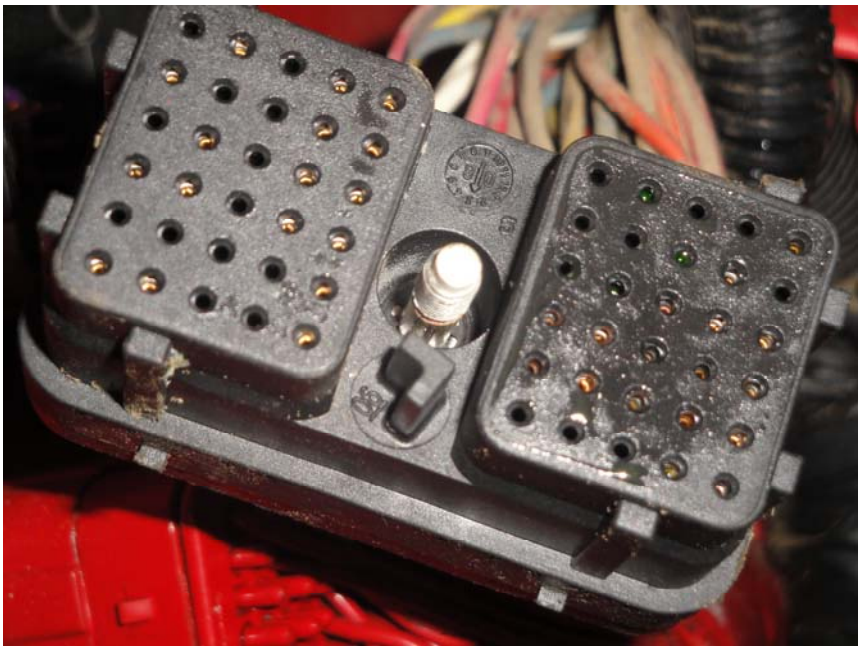

Figure 4

5.0 The procedure is complete and vehicle may be returned to service.

Parts List:

Quantity	P.N.	Description
1	10015356	Sensor, Coolant, Surge Tank
1	*	Permatex 22058, dielectric grease or equivalent
1	**	Blue Bird Engine Harness

* Purchase Locally
** Contact your local Blue Bird dealer for harness specific to your bus

Unintended Wiper Cycling

Description of Revisions: *This bulletin replaces the version dated June 2007. Part numbers for a new replacement stalk switch are shown in* **Table 1**. *The bulletin title has also been revised.*

General Information

Saf-T-Liner C2 School Buses built prior to July 18th, 2011 may exhibit an unintended cycling of the windshield wipers. If the multifunction turn signal switch part number is A06-36956-000 or A06-36956-002, replace the switch with part number A06-36956-003 and wiring support bracket 06-83353-000.

Procedure

1. Park the vehicle, shut down the engine, set the parking brakes, and chock the tires.
2. Locate the part number on the multifunction turn signal switch. See **Fig. 1**.

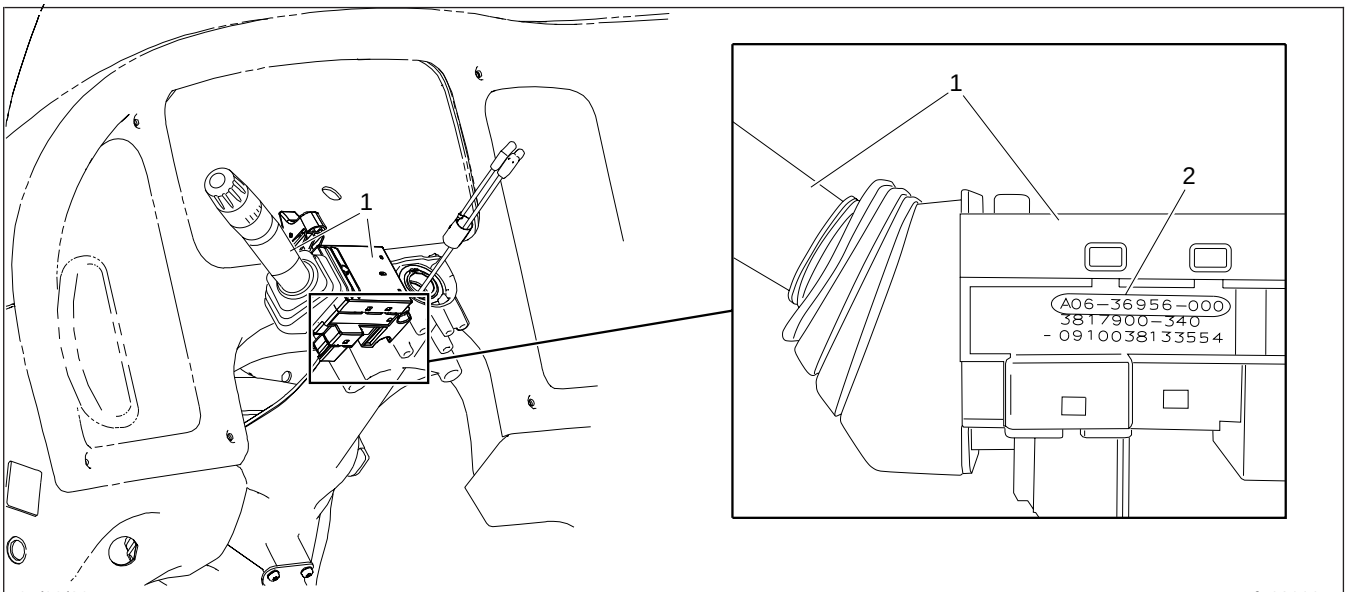

NOTE: The steering wheel is not shown for clarity.

1. Turn Signal Switch
2. Part Number

Fig. 1, Steering Column Clamshell Cover Assembly Removed

2.1 Remove the steering column clamshell cover assembly by removing the four screws that hold it together.

2.2 Check the part number stamped on the lower surface of the switch.

2.3 If the part number is A06-36956-000 or A06-36956-002, go to the next step.

If the part number is A06-36956-003 and the unintended cycling of the windshield wipers is still occurring, go to step 8 to install the wiring support bracket.

If part number A06-36956-003 is installed and the unintended wiper cycling is not occurring, install the steering column clamshell cover assembly. Tighten the fasteners firmly. No further action is necessary.

3. Disconnect the negative leads from the batteries.
4. Remove the capscrews that attach the multifunction turn signal switch to the steering column cover. See **Fig. 2**.

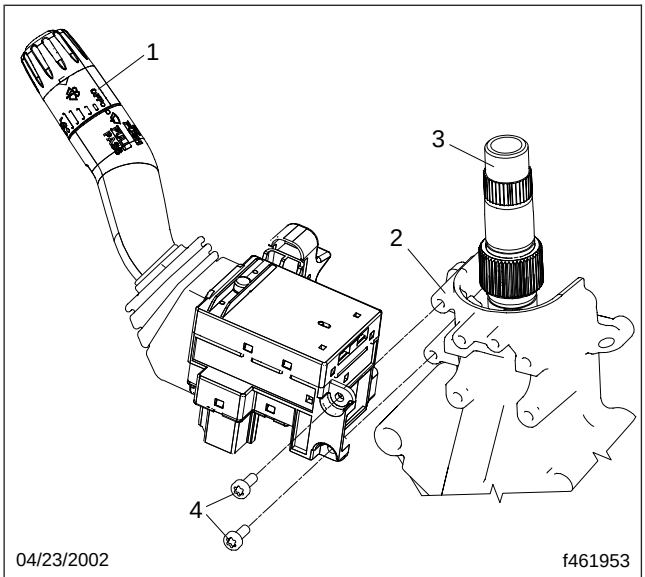

1. Multifunction Turn Signal Switch
2. Steering Column Cover
3. Steering Column
4. 15-mm Long Capscrew

Fig. 2, Multifunction Turn Signal Switch Installation

5. Disconnect the two electrical harness connectors from the multifunction turn signal switch, then remove the switch.
6. Connect the electrical harness connector to the new multifunction turn signal switch (A06-36956-003).

NOTE: The two capscrews used to mount the old turn signal switch can be used to install the new switch.

7. Properly orient the multifunction turn signal switch and use two 15-mm capscrews to attach the switch to the steering column cover. Torque 7 lbf·ft (9 N·m).
8. Install the wiring support bracket (06-83353-000) on the steering column cover. See **Fig. 3**.
   - 8.1 Secure the wiring support bracket to the steering column cover.
   - 8.2 Install the two M6 thread rolling screws (23-12966-715) to attach the wiring support bracket at the unused bosses in the steering column housing, and tighten securely.
9. Secure the multifunction turn signal switch wiring harness to the support bracket with the tie strap (23-13482-001). See **Fig. 4**.
10. Push the rubber boot over the connector.
11. Install the steering column clamshell cover assembly. Tighten the fasteners firmly.
12. Connect the batteries.
13. Remove the chocks from the tires.

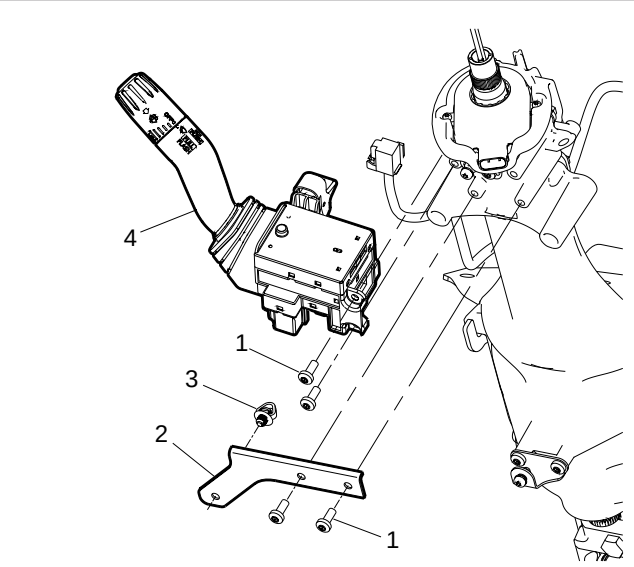

1. Mounting Screws
2. Wiring Support Bracket
3. Tie, Fir Tree
4. Turn Signal Switch

Fig. 3, New Turn Signal Switch Installation

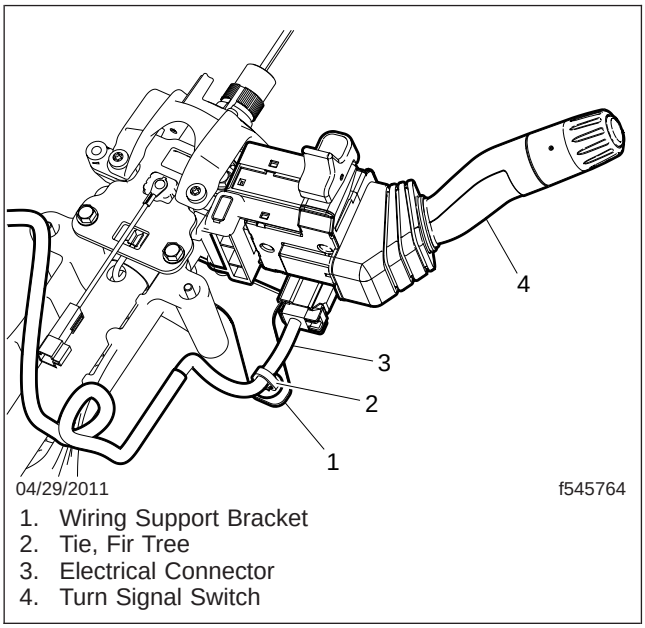

1. Wiring Support Bracket
2. Tie, Fir Tree
3. Electrical Connector
4. Turn Signal Switch

Fig. 4, New Turn Signal Switch Installation (reverse view)

Parts

See **Table 1** for parts required for the stalk switch retrofit.

Parts for Stalk Switch Retrofit		
Part	**Part Number**	**Quantity**
Multifunction Turn Stalk Switch	A06-36956-003	1
Bracket, Wiring Support	06-83353-000	1
Tie, Fir Tree	23-13482-001	1
M6 Screw	23-12966-715	2

Table 1, Parts for Stalk Switch Retrofit

Warranty

This procedure is warrantable only if the described condition exists and the repair is performed within the applicable base or extended coverage warranty period. If a failure is not found, this procedure is considered preventive and warranty does not apply.

Normal warranty applies. See **Table 2** for QuickClaim damage code and labor allowance information. Refer to this service bulletin by number at the beginning of the claim comments. See **Table 3** for OWL VMRS codes and labor allowance information. Enter this service bulletin number in the *Service Bulletin #* field.

QuickClaim Damage Code and Labor Allowance			
Damage Code	**SRT Code**	**Description**	**Time: Hours**
299–000A03315	299–5010A	Assembly, Turn Signal Switch, Replace	0.3
	299–5010B	Bracket, Turn Signal Switch, Replace	0.2

Table 2, QuickClaim Damage Code and Labor Allowance

OWL VMRS Codes and Labor Allowance				
Primary Failed Part	**Cause Code**	**SRT Code**	**Description**	**Time: Hours**
Turn Signal Switch Assembly	33	299–5010A	Assembly, Turn Signal Switch, Replace	0.3
		299–5010B	Bracket, Turn Signal Switch, Replace	0.2

Table 3, OWL VMRS Codes and Labor Allowance

Daimler Trucks North America LLC

Field Service Campaign

April 2011
SF443AB

Subject: FCCC Bus Chassis Poly-V Serpentine Drive Belts

Models Affected: Specific Freightliner Custom Chassis B2 school bus chassis (Thomas Built Bus Saf-T-Liner C2) and S2 shuttle bus chassis with Cummins ISB EPA10 engines manufactured June 10, 2009, through January 7, 2011.

General Information

Daimler Trucks North America LLC, on behalf of its wholly owned subsidiary, Freightliner Custom Chassis Corporation, is initiating Field Service Campaign SF443AB to modify the vehicles mentioned above.

On certain vehicles the poly-V serpentine drive belt may be too long, resulting in possible tensioner problems.

The poly-V serpentine drive belt will be inspected for proper length and replaced if necessary.

There are approximately 3,200 vehicles involved.

Additional Repairs

Dealers must complete all outstanding field service campaigns prior to the sale or delivery of a vehicle. A Dealer will be liable for any progressive damage that results from its failure to complete campaigns before sale or delivery of a vehicle.

Owners may be liable for any progressive damage that results from their failure to complete campaigns within a reasonable time after receiving notification.

Please contact Warranty Campaigns for consideration of additional charges prior to performing the repair.

Work Instructions

Please refer to the attached work instructions. Prior to performing the campaign, check the vehicle for a completion sticker (Form WAR261).

Replacement Parts

Replacement kits are now available and can be obtained by ordering the kit number listed below from your facing Parts Distribution Center.

If our records show your dealership has ordered any vehicle(s) involved in campaign SF443AB, a list of the customers and vehicle identification numbers will be available on AccessFreightliner.com. Please refer to this list when ordering parts for this campaign.

Table 1 - Replacement Parts for SF443AB

Campaign Number	Kit Number	Part Description	Part Number	Qty. per Kit	Suggested Wholesale*
SF443A	25-SF443-000	BELT-FAN DRIVE,8RIB,	01-32241-051	1 ea	$32.68 US $33.33 CAN
		Completion Sticker	WAR261	1ea	
SF443B	25-SF443-001	BELT-8RIB,EPDM-POLY,	01-32241-057	1 ea	$32.68 US $33.33 CAN
		Completion Sticker	WAR261	1 ea	

* Please charge all Direct Warranty Customers the above-listed price for the kit, as they are authorized to perform their own Field Service Campaigns.

Table 1

Field Service Campaign

Daimler Trucks
North America LLC

April 2011
SF443AB

Removed Parts

Please follow Warranty Failed Parts Tracking shipping instructions for the disposition of all removed parts.

Labor Allowance

Table 2 - Labor Allowance

Campaign Number	Procedure	Time Allowed (hours)	SRT Code	Damage Code
SF443AB	Inspect belt part number; no replacement needed	0.1	996-0833A	000-Inspected
	Inspect and replace belt	0.2	996-0833B	000-Modifiedx

Table 2

IMPORTANT: When the campaign has been completed, locate the base completion label in the appropriate location on the vehicle, and attach the gray completion sticker provided in the field service kit (Form WAR261). If the vehicle does not have a base completion label, clean a spot on the appropriate location of the vehicle and first attach the base completion label (Form WAR259). If a field service kit is not required or there is no completion sticker in the kit, write the campaign number on a blank sticker and attach it to the base completion label.

Claims for Credit

You will be reimbursed for your labor, parts, and handling by submitting your claim through the Warranty system within 30 days of completing the campaign. Please reference the following information in QuickClaim:

- Claim type is **Field Service**.
- In the FTL Authorization field, enter the campaign number and appropriate condition code (**SF443A or SF443B**).
- In the Primary Failed Part Number field, enter **25-SF443-000**.
- In the Parts field, enter the appropriate kit number(s) as shown in the Replacement Parts Table.
- In the Labor field, first enter the appropriate SRT from the Labor Allowance Table. For administrative time, enter SRT 939-0010A for 0.3 hours.
- If pulley alignment work is done (see step 5), it will be claimed separately:

  - For OWL dealerships, submit a Warranty PreApproval for the pulley alignment. Include in the comment section the campaign number, FCCC Call Center inquiry number, and name of person providing the authorization.

  - For non OWL dealerships, obtain an FSA number from the FCCC Call Center and file a regular FSA claim.
- For OWL, the VMRS Component Code is 042-003-010.

This Field Service Campaign will **terminate on April 30, 2012**. Dealers will be notified of any changes to the termination date via Important Campaign Information Letter posted on AccessFreightliner.com.

IMPORTANT: ServicePro® must be viewed prior to beginning work to ensure the vehicle is involved and the campaign has not previously been completed. Also, check for a completion sticker before beginning work.

All claims must be submitted within 30 days of the repair and within 30 days of the termination date of the campaign. All excess inventory to be returned to the PDC following the conclusion of the campaign must be returned in resaleable condition to the Memphis PDC within 90 days from the termination date. Please submit a PAR to request return to the Memphis PDC. (Canadian dealers should return the kits to their facing PDC.)

Contact the Warranty Campaigns Department from 7:00 a.m. to 4:00 p.m. Pacific Time, Monday through Friday, via Web inquiry at AccessFreightliner.com / Support / Submit an Inquiry, or the Customer Assistance Center at (800) 385-4357, after normal business hours, if you have any questions or need additional information.

Daimler Trucks
North America LLC

Field Service Campaign

April 2011
SF443AB

Copy of Letter to Owner

Subject: FCCC Bus Chassis Poly-V Serpentine Drive Belts

Daimler Trucks North America LLC, on behalf of its wholly owned subsidiary, Freightliner Custom Chassis Corporation, is initiating Field Service Campaign SF443AB to modify specific Freightliner Custom Chassis B2 school bus chassis (Thomas Built Bus Saf-T-Liner C2) and S2 shuttle bus chassis with Cummins ISB EPA10 engines manufactured June 10, 2009, through January 7, 2011.

On certain vehicles the poly-V serpentine drive belt may be too long, resulting in possible tension problems.

The drive belt will be inspected for proper length and replaced if necessary.

Parts are now available for authorized dealers to order. Contact your authorized Daimler Trucks North America dealer to arrange to have the campaign performed as soon as possible and to ensure that parts are available at the dealership. To locate an authorized dealer, search online at www.Daimler-TrucksNorthAmerica.com or contact the Warranty Campaigns Department for assistance.

When you contact your dealer, refer to Field Service Campaign **SF443AB** and your vehicle identification number. Once kit(s) are received at the dealership, the campaign will take approximately 30 minutes and will be performed at no charge to you.

This Field Service Campaign will **terminate on April 30, 2012**. Please make sure the campaign is completed prior to this date. Work completed after this date will be done at the customer's expense.

As stated in the terms of your express limited warranty, Daimler Trucks North America LLC will not pay for any damage caused by failure to properly maintain your vehicle. Daimler Trucks North America LLC considers the work necessary under this campaign to be proper maintenance and will, therefore, not pay for any damage to your vehicle caused by your failure to have the repairs that are the subject of this campaign performed in a reasonable time.

IMPORTANT: When the campaign has been completed on your vehicle, please ensure that a completion sticker has been affixed to your vehicle referencing **SF443**.

Contact the Warranty Campaigns Department at (800) 547-0712, from 7:00 a.m. to 4:00 p.m. Pacific Time, Monday through Friday, e-mail address DTNA.Warranty.Campaigns@Daimler.com, or the Customer Assistance Center at (800) FTL-HELP, after normal business hours, if you have any questions or need additional information.

WARRANTY CAMPAIGNS DEPARTMENT

Enclosure

Field Service Campaign

Daimler Trucks
North America LLC

April 2011
SF443AB

Work Instructions

Subject: FCCC Bus Chassis Poly-V Serpentine Drive Belts

Models Affected: Specific Freightliner Custom Chassis B2 school bus chassis (Thomas Built Bus Saf-T-Liner C2) and S2 shuttle bus chassis with Cummins ISB EPA10 engines manufactured June 10, 2009, through January 7, 2011.

Belt Inspection and Replacement Procedure

1. Check the base label (Form WAR259) for a completion sticker for SF443 (Form WAR261), indicating this work has been completed. On school busses, the base label is usually located above the driver's window. On shuttle busses, the base label is usually located in the driver's area. If a completion sticker is present, no further work is needed. If a completion sticker is not present, proceed to the next step.
2. Park the vehicle on a level surface, shut down the engine, apply the parking brake, and chock the tires.
3. Disconnect the batteries at the negative terminals.
4. Open the hood and inspect the belt to see if it has already been replaced. Look at the part number painted on the belt. For vehicles in SF443A it should end in -051 and for vehicles in SF443B it should end in -057. If the part number does not end in -051 for SF443A or in -057 for SF443B, replace it.

NOTE: The engine may need to be started momentarily then turned off as many times as necessary to bring the part number on the belt into view.

5. Check the alignment of the pulleys. See **Fig. 1**. If alignment is in question, contact the FCCC Call Center Dealer Line for assistance and authorization number. Any alignment work will be claimed separately. For OWL dealers, obtain the inquiry number and name of person providing the authorization. For non OWL dealers obtain an FSA number.
6. Replace the poly-V serpentine drive belt as follows.

   6.1 Insert a 1/2-inch-drive wrench into the square hole in the belt tensioner, and pull up on the wrench to rotate the tensioner down and away from the belt (clockwise). See **Fig. 2**.

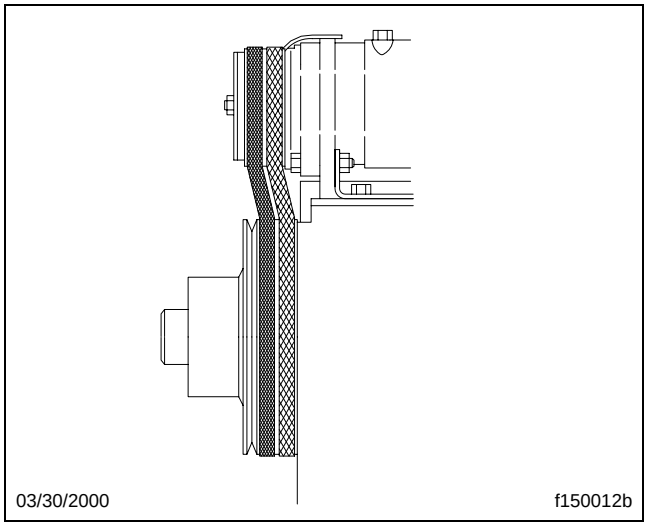

Fig. 1, Typical Pulley Misalignment

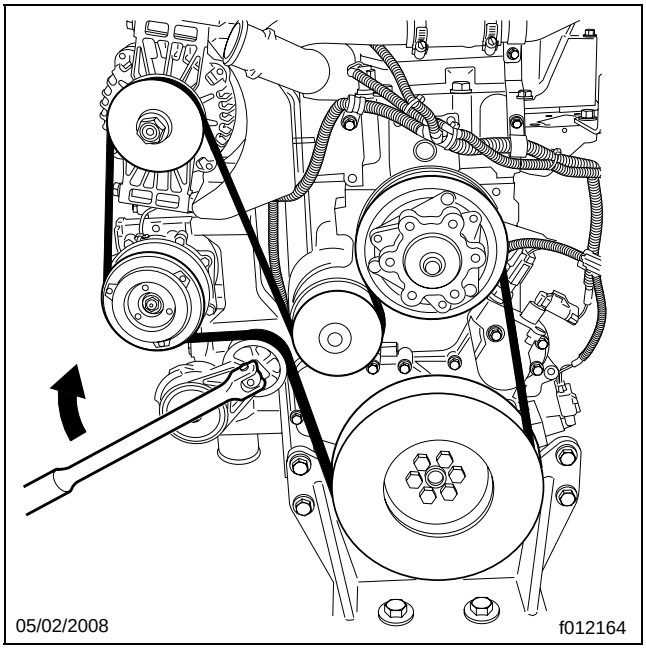

Fig. 2, Releasing the Belt Tensioner

6.2 Remove the existing belt.

6.3 With the belt tensioner swiveled down, fit the new belt onto the various component pulleys. Be careful not to kink, stretch, or otherwise damage the belt. Do not fit the belt onto the tensioner pulley yet.

6.4 Check the drive belt to make sure it is in the correct position and correctly aligned on all the pulleys.

6.5 With the belt correctly in place, lower the wrench to return the tensioning pulley to its original position, allowing the belt tensioner to automatically put the correct tension on the belt; then remove the wrench.

7. Close the hood.
8. Connect the batteries.
9. Clean a spot on the base label (Form WAR259) and attach a grey completion sticker for SF443 (Form WAR261) to indicate the work has been completed.

Daimler Trucks North America LLC

Field Service Campaign

November 2011
SF451AB

Subject: Remy 29MT Starters

Models Affected: Specific Freightliner Business Class M2 vehicles; Freightliner Custom Chassis B2 school bus chassis (Thomas Built Buses Saf-T-Liner C2), S2 shuttle bus chassis, and MC/XC motorhome chassis manufactured February 1, 2011, through March 23, 2011.

General Information

Daimler Trucks North America LLC, on behalf of its Freightliner Trucks Division and its wholly owned subsidiary, Freightliner Custom Chassis Corporation, is initiating Field Service Campaign SF451AB to modify the vehicles mentioned above.

Certain vehicles may have been built with Remy 29MT starters that may contain clutch rolls with improper heat treatments.

The starters will be inspected and replaced if necessary.

There are approximately 450 vehicles involved.

Additional Repairs

Dealers must complete all outstanding field service campaigns prior to the sale or delivery of a vehicle. A Dealer will be liable for any progressive damage that results from its failure to complete campaigns before sale or delivery of a vehicle.

Owners may be liable for any progressive damage that results from their failure to complete campaigns within a reasonable time after receiving notification.

Please contact Warranty Campaigns for consideration of additional charges prior to performing the repair.

Work Instructions

Please refer to the attached work instructions. Prior to performing the campaign, check the vehicle for a completion sticker (Form WAR261).

Replacement Parts

Replacement parts are now available and can be obtained by ordering the kit number listed below from your facing Parts Distribution Center.

If our records show your dealership has ordered any vehicle(s) involved in campaign SF451AB, a list of the customers and vehicle identification numbers will be available on AccessFreightliner.com. Please refer to this list when ordering parts for this campaign.

Table 1 - Replacement Parts for SF451AB

Campaign Number	Kit Number	Part Description	Part Number	Qty. per Kit	Suggested Wholesale*
SF451AB	25-SF451-000	STARTER-DR 12V,29MT+	DR 8200571	1 ea	$426.78 US $422.51 CAN
		Completion Sticker	WAR261	1 ea	

* Please charge all Direct Warranty Customers the above-listed price for the kit, as they are authorized to perform their own Field Service Campaigns.

Table 1

Field Service Campaign

Daimler Trucks
North America LLC

November 2011
SF451AB

Removed Parts

Please follow Warranty Failed Parts Tracking shipping instructions for the disposition of all removed parts.

Labor Allowance

Table 2 - Labor Allowance

Campaign Number	Procedure	Time Allowed (hours)	SRT Code	Damage Code
SF451AB	Inspect 29MT Starter	0.2	996-0850A	000-Inspected
SF451AB	Inspect and Replace 29MT Starter	1.4 M2 Only	996-0850B	000-Modifiedx
		0.9 All other vehicles		

Table 2

IMPORTANT: When the campaign has been completed, locate the base completion label in the appropriate location on the vehicle, and attach the gray completion sticker provided in the field service kit (Form WAR261). If the vehicle does not have a base completion label, clean a spot on the appropriate location of the vehicle and first attach the base completion label (Form WAR259). If a field service kit is not required or there is no completion sticker in the kit, write the campaign number on a blank sticker and attach it to the base completion label.

Claims for Credit

You will be reimbursed for your labor, parts, and handling by submitting your claim through the Warranty system within 30 days of completing the campaign. Please reference the following information in QuickClaim:

- Claim type is **Field Service**.
- In the FTL Authorization field, enter the campaign number and appropriate condition code (**SF451A or SF451B**).
- In the Primary Failed Part Number field, enter **25-SF451-000**.
- In the Parts field, enter the appropriate kit number(s) as shown in the Replacement Parts Table.
- In the Labor field, first enter the appropriate SRT from the Labor Allowance Table. For administrative time, enter SRT 939-0010A for 0.4 hours for RVs or 0.3 hours for all other vehicles.
- For OWL, the VMRS Component Code is 032-002-001.

This Field Service Campaign will **terminate on November 30, 2012**. Dealers will be notified of any changes to the termination date via Important Campaign Information Letter posted on AccessFreightliner.com.

IMPORTANT: ServicePro® must be viewed prior to beginning work to ensure the vehicle is involved and the campaign has not previously been completed. Also, check for a completion sticker before beginning work.

All claims must be submitted within 30 days of the repair and within 30 days of the termination date of the campaign. All excess inventory to be returned to the PDC following the conclusion of the campaign must be returned in resaleable condition to the Memphis PDC within 90 days from the termination date. Please submit a PAR to request return to the Memphis PDC. (Canadian dealers should return the kits to their facing PDC.)

Contact the Warranty Campaigns Department from 7:00 a.m. to 4:00 p.m. Pacific Time, Monday through Friday, via Web inquiry at AccessFreightliner.com / Support / Submit an Inquiry, or the Customer Assistance Center at (800) 385-4357, after normal business hours, if you have any questions or need additional information.

Daimler Trucks North America LLC

Field Service Campaign

November 2011
SF451AB

Copy of Letter to Owner

Subject: Remy 29MT Starters

Daimler Trucks North America LLC, on behalf of its Freightliner Trucks Division and its wholly owned subsidiary, Freightliner Custom Chassis Corporation, is initiating Field Service Campaign SF451AB to modify specific Freightliner Business Class M2 vehicles; Freightliner Custom Chassis B2 school bus chassis (Thomas Built Buses Saf-T-Liner C2), S2 shuttle bus chassis, and MC/XC motorhome chassis manufactured February 1, 2011, through March 23, 2011.

Certain vehicles may have been built with 29MT starters that may contain clutch rolls with improper heat treatments.

The starters will be inspected and replaced if necessary.

Please contact an authorized Daimler Trucks North America dealer to arrange to have the campaign performed and to ensure that parts are available at the dealership. To locate an authorized dealer, search online at www.Daimler-TrucksNorthAmerica.com. The campaign may take up to an hour and a half and will be performed at no charge to you.

This Field Service Campaign will **terminate on November 30, 2012**. Please make sure the campaign is completed prior to this date. Work completed after this date will be done at the customer's expense.

As stated in the terms of your express limited warranty, Daimler Trucks North America LLC will not pay for any damage caused by failure to properly maintain your vehicle. Daimler Trucks North America LLC considers the work necessary under this campaign to be proper maintenance and will, therefore, not pay for any damage to your vehicle caused by your failure to have the repairs that are the subject of this campaign performed in a reasonable time.

IMPORTANT: When the campaign has been completed on your vehicle, please ensure that a completion sticker has been affixed to your vehicle referencing **SF451AB**.

Contact the Warranty Campaigns Department at (800) 547-0712, from 7:00 a.m. to 4:00 p.m. Pacific Time, Monday through Friday, e-mail address DTNA.Warranty.Campaigns@Daimler.com, or the Customer Assistance Center at (800) FTL-HELP, after normal business hours, if you have any questions or need additional information.

WARRANTY CAMPAIGNS DEPARTMENT

Enclosure

Field Service Campaign

Daimler Trucks
North America LLC

November 2011
SF451AB

Work Instructions

Subject: Remy 29MT Starters

Specific Freightliner Business Class M2 vehicles; Freightliner Custom Chassis B2 school bus chassis (Thomas Built Buses Saf-T-Liner C2), S2 shuttle bus chassis, and MC/XC motorhome chassis manufactured February 1, 2011, through March 23, 2011.

Starter Inspection and Replacement Procedure

1. Check the base label (Form WAR259) for a completion sticker for SF451 (Form WAR261) indicating this work has been done. On trucks, the base label is usually located on the passenger-side door, about 12 inches (30 cm) below the door latch. On school buses and shuttle buses, the base label is usually located over the driver's window. On motorhomes, the base label is usually located on the front wall, under the dash. If a completion sticker is present, no further work is needed. If there is no completion sticker, go to the next step.
2. Park the vehicle on a level surface, shut down the engine, and set the parking brake. Chock the tires.
3. Access the engine, and locate the Delco Remy label attached to the starter. It may be necessary to inspect the starter from underneath the engine to see the label.
4. Inspect the date code on the label, located in the area shown in **Fig 1**, to determine if the starter requires replacement. The date codes of starters that must be replaced are within the range of 09FE11 (9 February 2011) through 18MR11 (18 March 2011). If the starter label is missing or unreadable, replace the starter.
5. If the starter date code does not fall within the affected range, no further action is necessary. Clean a spot on the base label (Form WAR259). Write campaign number SF451 on a blank, gray completion sticker (Form WAR261) and attach it to the base label.
6. If the starter date code falls within the affected range, or is missing or unreadable, replace the starter.
   - 6.1 Disconnect the negative battery cables at the batteries, and open the hood.
   - 6.2 Disconnect and label the wiring that connects to the starter. See **Fig. 2**.
   - 6.3 Support the starter, then remove the mounting bolts that attach it to the flywheel housing.
   - 6.4 Place a new starter into the mounting hole in the flywheel housing, then hand tighten the three mounting bolts until finger tight.

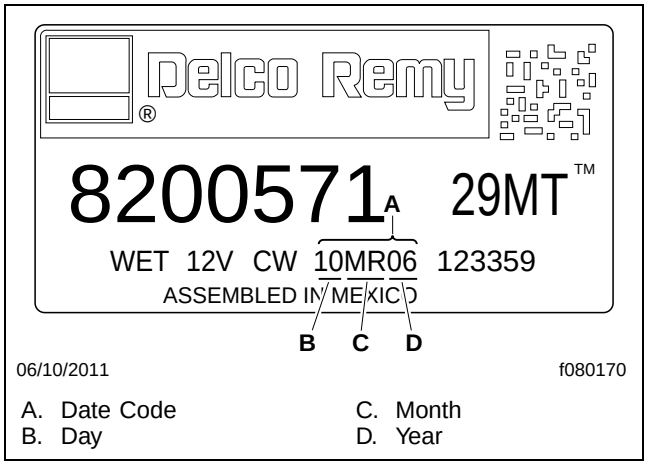

Fig. 1, Starter Label

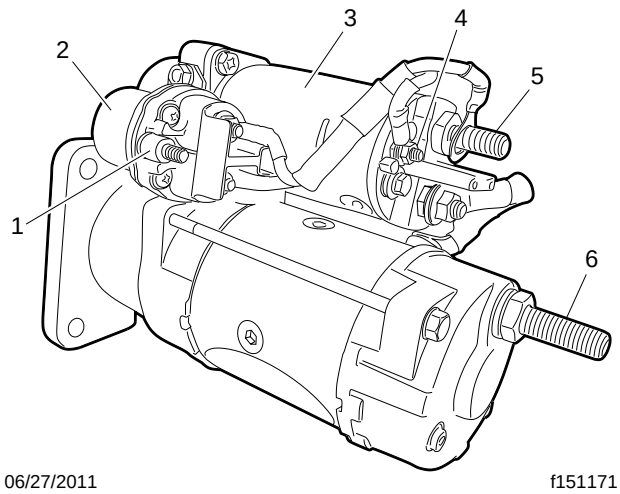

1. Magnetic Switch (+) Terminal
2. Magnetic Switch
3. Solenoid
4. Solenoid Switch (+) Terminal
5. Solenoid Battery (+) Terminal
6. Starter Ground (–) Terminal

Fig. 2, Delco Remy 29MT Starter Terminals

6.5 Using a torque wrench, tighten the mounting bolts to the values shown in **Table 3**.

Torque Values, Starter-Motor to Flywheel-Housing Bolts		
Fastener Description	**Size**	**Torque Value: lbf·ft (N·m)**
Detroit Diesel (steel housing)	5/8–16	137–147 (186–199)
Detroit Diesel (aluminum housing)	5/8–16	85–95 (115–129)
Cummins (steel or aluminum housing)	5/8–16	130–170 (176–230)

Table 3, Torque Values, Starter-Motor to Flywheel-Housing Bolts

6.6 Connect the wiring to the solenoid and starter as previously marked. Tighten the terminals to the torque values shown in **Table 4**, then protect the terminal connectors with dielectric red enamel.

Torque Values, Delco Remy Starter Connections			
Starter	**Terminal**		
	Solenoid Switch (+)	**Solenoid Battery (+)**	**Starter Ground (–)**
29MT	18 to 20 lbf·in (200 to 225 N·cm)	10 to 13 lbf·ft (14.7 to 17.7 N·m)	10 to 13 lbf·ft (14.7 to 17.7 N·m)

Table 4, Torque Values, Delco Remy 29MT Starter Connections

6.7 Connect the batteries.

7. Clean a spot on the base label (Form WAR259) and attach a completion sticker for SF451 (Form WAR261) to the base label.

Daimler Trucks
North America LLC

Field Service Campaign

October 2011
SF453A-D

Subject: Hybrid Cooling System Updates and Check Lamps

Models Affected: Specific Freightliner Business Class M2 Hybrid vehicles and Freightliner Custom Chassis B2 Hybrid school bus chassis (Thomas Built Bus Saf-T-Liner C2 school buses) manufactured December 5, 2007, through July 21, 2011.

General Information

Daimler Trucks North America LLC, on behalf of its Freightliner Trucks Division and its wholly owned subsidiary, Freightliner Custom Chassis Corporation, is initiating Field Service Campaign SF453A-D to modify the vehicles mentioned above.

Certain hybrid electric vehicles may require updates to the radiator, the coolant pump fuse, and the instrument display panel.

Depending on the repairs required for each vehicle, the radiator will be inspected and replaced if necessary, a radiator support bracket installed, the coolant pump fuse and display check lamp replaced.

There are approximately 700 vehicles involved.

Additional Repairs

Dealers must complete all outstanding field service campaigns prior to the sale or delivery of a vehicle. A Dealer will be liable for any progressive damage that results from its failure to complete campaigns before sale or delivery of a vehicle.

Owners may be liable for any progressive damage that results from failure to complete campaigns within a reasonable time after receiving notification.

Please contact Warranty Campaigns for consideration of additional charges prior to performing the repair.

Work Instructions

Please refer to the attached work instructions. Prior to performing the campaign, check the vehicle for a completion sticker (Form WAR261).

Replacement Parts

Replacement parts are now available and can be obtained by ordering the kit number listed below from your facing Parts Distribution Center.

If our records show your dealership has ordered any vehicle(s) involved in campaign SF453A-D, a list of the customers and vehicle identification numbers will be available on AccessFreightliner.com. Please refer to this list when ordering parts for this campaign.

Field Service Campaign

Daimler Trucks
North America LLC

October 2011
SF453A-D

Table 1 - Replacement Parts for SF453A-D

Campaign Number	Kit Number	Part Description	Part Number	Qty. per Kit	Suggested Wholesale*
SF453A	25-SF453-000	CORE-HEAT EXCHANGER	TDC 20481	1 ea	$934.77 US $925.42 CAN
		BRACKET-COOLER SUPPORT	05-30590-000	1 ea	
		DISPLAY-ELECTRONIC HYBRID	FUL 559380	1 ea	
		FUSE-MINI, 25AMP	23-12537-025	1 ea	
		Completion Sticker	WAR261	1 ea	
SF453B	25-SF453-001	BRACKET-COOLER SUPPORT	05-30590-000	1 ea	$283.34 US $280.51 CAN
		DISPLAY-ELECTRONIC HYBRID	FUL 559380	1 ea	
		FUSE-MINI, 25AMP	23-12537-025	1 ea	
		Completion Sticker	WAR261	1 ea	
SF453C	25-SF453-002	DISPLAY-ELECTRONIC HYBRID	FUL 559380	1 ea	$305.79 US $302.73 CAN
		Completion Sticker	WAR261	1 ea	
SF453D (Note: This kit comes with two brackets, but only one is used)	25-SF453-003	BRACKET-COOLER SUPPORT	05-30590-000	2 ea	$168.31 US $166.63 CAN
		Completion Sticker	WAR261	1 ea	

* Please charge all Direct Warranty Customers the above-listed price for the kit, as they are authorized to perform their own Field Service Campaigns.

Table 1

Removed Parts

Please follow Warranty Failed Parts Tracking shipping instructions for the disposition of all removed parts.

Labor Allowance

Table 2 - Labor Allowance

Campaign Number	Procedure	Time Allowed (hours)	SRT Code	Damage Code
SF453A	Inspect & replace radiator; install bracket; replace check lamp & fuse	1.3	996-0854A	000-Modifiedx
	Inspect radiator; install bracket; replace check lamp & fuse	0.6	996-0854B	000-Modifiedx
SF453B	Install bracket; replace check lamp & fuse	0.6	996-0854B	000-Modifiedx
SF453C	Replace check lamp	0.2	996-0854C	000-Modifiedx
SF453D	Install support bracket	0.4	996-0854D	000-Modifiedx

Table 2

IMPORTANT: When the campaign has been completed, locate the base completion label in the appropriate location on the vehicle, and attach the gray completion sticker provided in the field service kit (Form WAR261). If the vehicle does not have a base completion label, clean a spot on the appropriate location of the vehicle and first attach the base completion label (Form WAR259). If a field service kit is not required or there is no completion sticker in the kit, write the campaign number on a blank sticker and attach it to the base completion label.

Claims for Credit

You will be reimbursed for your labor, parts, and handling by submitting your claim through the Warranty system within 30 days of completing the campaign. Please reference the following information in QuickClaim:

- Claim type is **Field Service**.
- In the FTL Authorization field, enter the campaign number and appropriate condition code (e.g. **SF453A, SF453B, etc.**).
- In the Primary Failed Part Number field, enter **25-SF453-000**.
- In the Parts field, enter the appropriate kit number(s) as shown in the Replacement Parts Table. Up to $10.00 may be claimed to top off the coolant.

  In Legacy: List the needed coolant amount in the Parts section of the claim as "ZZ Coolant."
- **In OWL:** List the needed coolant amount in the Other Charges section of the claim as Expense Type "Other" and Description "Coolant."
- In the Labor field, first enter the appropriate SRT from the Labor Allowance Table. For administrative time, enter SRT 939-0010A for 0.3 hours.
- For OWL, the VMRS Component Code is 048-001-037.

This Field Service Campaign will **terminate on October 31, 2012**. Dealers will be notified of any changes to the termination date via Important Campaign Information Letter posted on AccessFreightliner.com.

IMPORTANT: ServicePro® must be viewed prior to beginning work to ensure the vehicle is involved and the campaign has not previously been completed. Also, check for a completion sticker before beginning work.

All claims must be submitted within 30 days of the repair and within 30 days of the termination date of the campaign. All excess inventory to be returned to the PDC following the conclusion of the campaign must be returned in resaleable condition to the Memphis PDC within 90 days from the termination date. Please submit a PAR to request return to the Memphis PDC. (Canadian dealers should return the kits to their facing PDC.)

Contact the Warranty Campaigns Department from 7:00 a.m. to 4:00 p.m. Pacific Time, Monday through Friday, via Web inquiry at AccessFreightliner.com / Support / Submit an Inquiry, or the Customer Assistance Center at (800) 385-4357, after normal business hours, if you have any questions or need additional information.

Field Service Campaign

Daimler Trucks
North America LLC

October 2011
SF453A-D

Copy of Notice to Owners

Subject: Hybrid Cooling System Updates and Check Lamp

Daimler Trucks North America LLC, on behalf of its Freightliner Trucks Division and its wholly owned subsidiary, Freightliner Custom Chassis Corporation, is initiating Field Service Campaign SF453A-D to modify specific Freightliner Business Class M2 Hybrid vehicles and Freightliner Custom Chassis B2 Hybrid school bus chassis (Thomas Built Bus Saf-T-Liner C2 school buses) manufactured December 5, 2007, through July 21, 2011.

Certain hybrid electric vehicles may require updates to the radiator, the coolant pump fuse, and the instrument display panel.

Depending on the repairs required for each vehicle, the radiator will be inspected and replaced if necessary, a radiator support bracket installed, the coolant pump fuse and display check lamp replaced.

Please contact an authorized Daimler Trucks North America dealer to arrange to have the campaign performed and to ensure that parts are available at the dealership. To locate an authorized dealer, search online at www.Daimler-TrucksNorthAmerica.com. The campaign will take approximately 30 to 90 minutes depending on the repair required for your vehicle and will be performed at no charge to you.

This Field Service Campaign will **terminate on October 31, 2012**. Please make sure the campaign is completed prior to this date. Work completed after this date will be done at the customer's expense.

As stated in the terms of your express limited warranty, Daimler Trucks North America LLC will not pay for any damage caused by failure to properly maintain your vehicle. Daimler Trucks North America LLC considers the work necessary under this campaign to be proper maintenance and will, therefore, not pay for any damage to your vehicle caused by your failure to have the repairs that are the subject of this campaign performed in a reasonable time.

IMPORTANT: When the campaign has been completed on your vehicle, please ensure that a completion sticker has been affixed to your vehicle referencing **SF453**.

Contact the Warranty Campaigns Department at (800) 547-0712, from 7:00 a.m. to 4:00 p.m. Pacific Time, Monday through Friday, e-mail address DTNA.Warranty.Campaigns@Daimler.com, or the Customer Assistance Center at (800) FTL-HELP, after normal business hours, if you have any questions or need additional information.

WARRANTY CAMPAIGNS DEPARTMENT

Enclosure

Work Instructions

Subject: Hybrid Cooling System Updates and Check Lamp

Models Affected: Specific Freightliner Business Class M2 Hybrid vehicles and Freightliner Custom Chassis B2 Hybrid school bus chassis (Thomas Built Bus Saf-T-Liner C2 school buses) manufactured December 5, 2007, through July 21, 2011.

Preliminary Procedures

1. Check the base label (Form WAR259) for a completion sticker for SF453 (Form WAR261). The base label is usually located on the passenger-side door, about 12 inches (30 cm) below the door latch. If a completion sticker is present, no further work is needed. If a completion sticker is not present, proceed to the next step.
2. Park the vehicle on a level surface, shut down the engine, and set the parking brake. Chock the tires.
3. Go to the appropriate section of the work instructions for the vehicle:
   - SF453A - this page - Radiator, Support Bracket, Coolant Pump Fuse, & Check Lamp Assembly
   - SF453B - page 8 - Support Bracket, Coolant Pump Fuse, & Check Lamp Assembly
   - SF453C - page 8 - Check Lamp Assembly Only
   - SF453D - page 8 - Support Bracket Only

SF453A: Radiator, Support Bracket, Coolant Pump Fuse & Check Lamp Assy

1. Check the forward end tank of the radiator for a green indicator dot. It is visible from under the driver's side fuel tank; see **Fig. 1**.

   If the green dot is present, the radiator does not need to be replaced. Go to step 1 of the SF453B section and finish the repair with the SF453B instructions. Use SRT 996-0854B when filing your claim.

   If there is no green dot, continue with the following steps to replace the radiator with a newer one that has additional welds between the core support braces and the end tanks (see **Fig. 2**).
2. Disconnect the 12V batteries.
3. Raise the front of the truck, and place it on jack stands.
4. Loosen, but do not remove the top two bolts on the existing front cooler bracket. See **Fig. 3**.
5. Remove the lower radiator hose and drain the system. Drain into a clean container for reuse.
6. Remove the remaining hoses.
7. Remove the four bolts that attach the radiator to the brackets, and remove the assembly.
8. Remove the fan/shroud assembly from the original radiator and install it on the new one.
9. Install the radiator and new support bracket, as follows.

   9.1 Set the radiator assembly in position and install the rear radiator mounting bolts finger-tight.

   9.2 Install the front radiator mounting bolts, leaving a gap large enough for the new support bracket to be installed.

   9.3 Place the new bracket as shown in **Fig. 4**.

   IMPORTANT: Tighten the top bracket bolts carefully to avoid damaging any air and electrical lines routed in the channel of the frame rail.

   9.4 Tighten the top bracket flange screws 21 lbf·ft (28 N·m).

   9.5 Tighten the radiator mounting flange screws 11 lbf·ft (15 N·m).

Field Service Campaign

Daimler Trucks
North America LLC

October 2011
SF453A-D

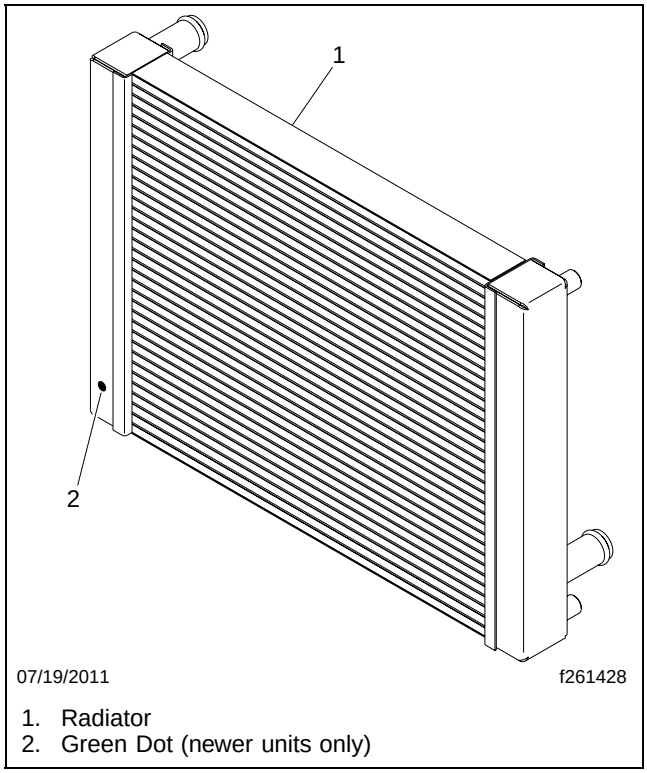

1. Radiator
2. Green Dot (newer units only)

Fig. 1, New Radiator

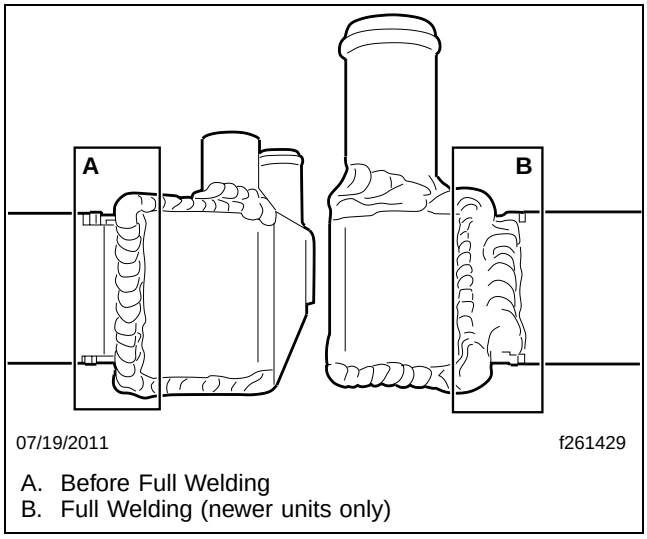

A. Before Full Welding
B. Full Welding (newer units only)

Fig. 2, End Tank Welds

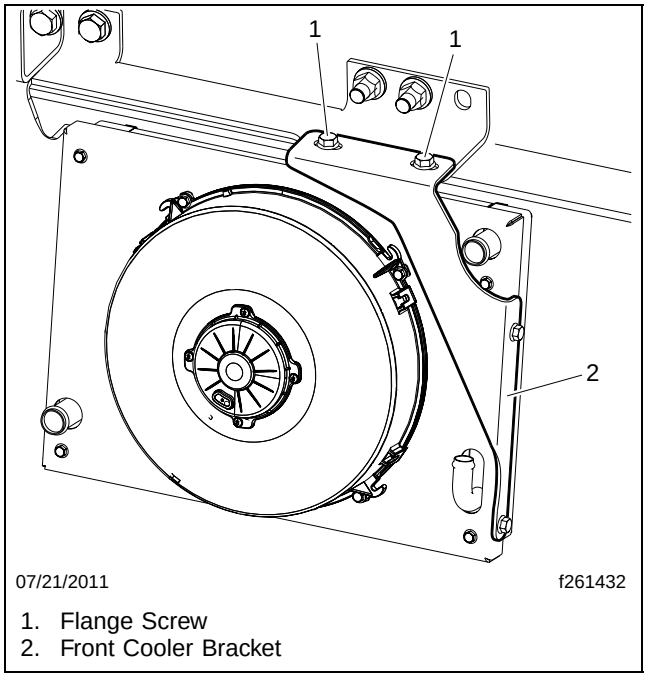

1. Flange Screw
2. Front Cooler Bracket

Fig. 3, Front Cooler Bracket and Flange Screws

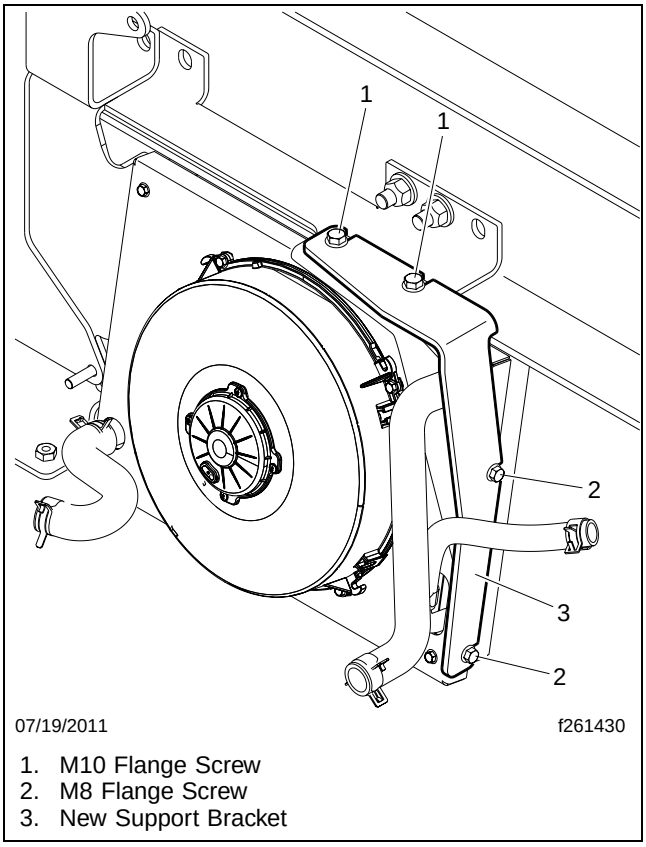

1. M10 Flange Screw
2. M8 Flange Screw
3. New Support Bracket

Fig. 4, New Support Bracket Installation

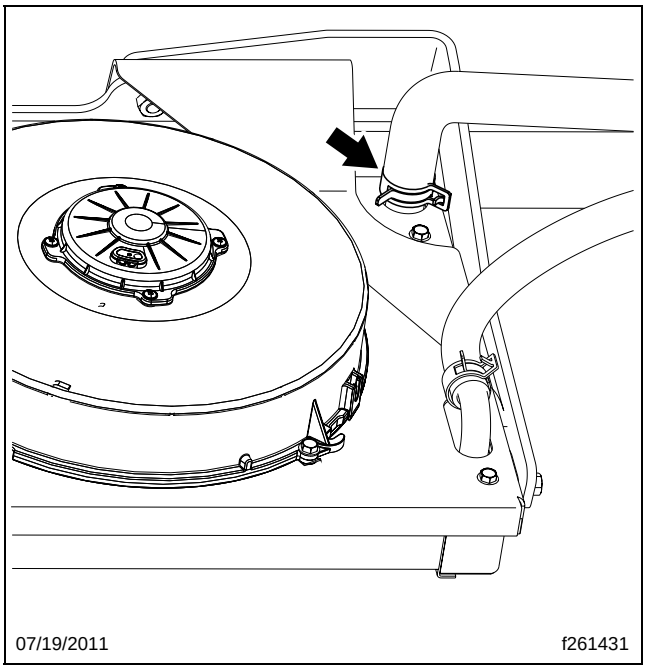

Fig. 5, Radiator Hose Clamp, Properly Oriented

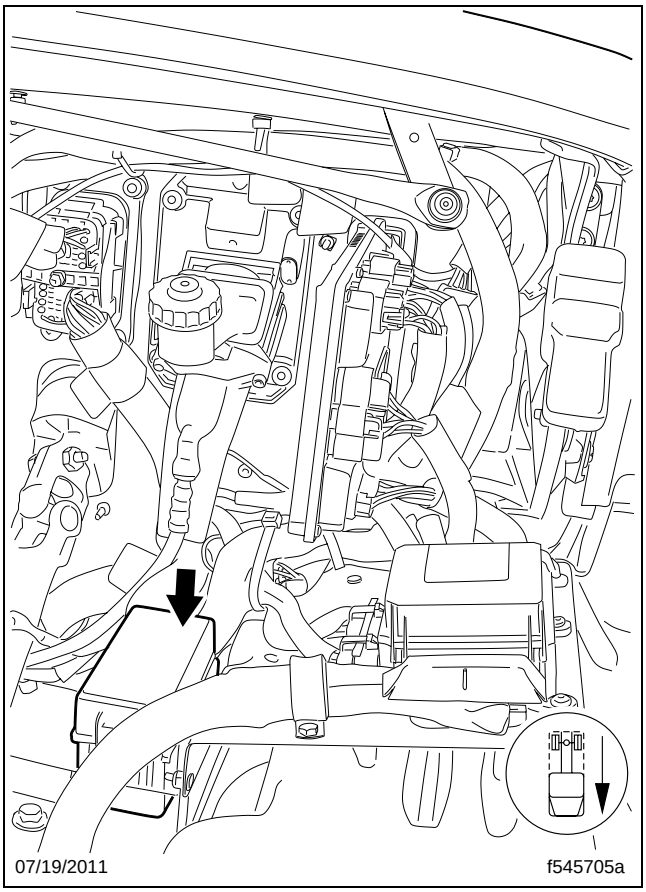

Fig. 6, Powertrain PDM

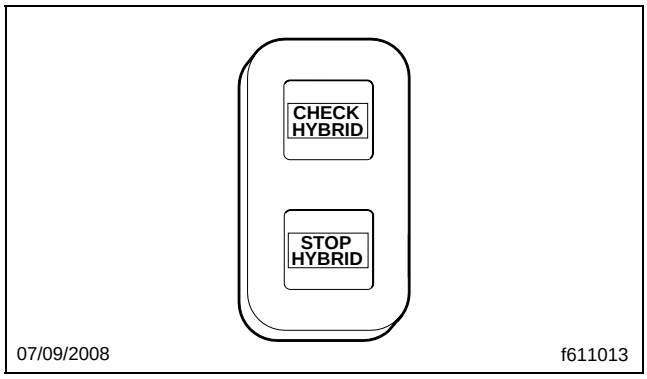

Fig. 7, HEV Check Lamps

10. Connect the coolant hoses.
11. Connect the batteries.
12. Fill and bleed the HEV cooling system, as follows.
    - 12.1 Fill the reservoir with the saved coolant.
    - 12.2 Start the engine, and continue to fill the reservoir to the "MAX" mark, as required.
13. At the powertrain PDM (**Fig. 6**), check the coolant pump fuse at position F4. If the size of the fuse does not match the rating indicated on the PDM cover, replace it with the correct one from the kit.
14. Install the new HEV system check lamp assembly from the kit.
    - 14.1 Remove the dash panel cover and center dash panel.
    - 14.2 Replace the warning light with the new one included in the kit. See **Fig. 7**
15. Clean a spot on the base label (Form WAR259) and attach a grey completion sticker for SF453 (Form WAR261) to indicate the work has been completed.

SF453B: Support Bracket, Coolant Pump Fuse, & Check Lamp Assembly

1. Disconnect the 12V batteries.
2. Loosen, but do not remove the top two bolts on the existing front cooler bracket. See **Fig. 3**.
3. Loosen the front two radiator mounting bolts.
4. Orient the upper radiator hose clamp so that the release tabs point down. See **Fig. 5**. This will prevent rubbing issues and allow the hose clamp to be removed without removing the radiator bracket.
5. Place the new bracket as shown in **Fig. 4**.

IMPORTANT: Tighten the top bracket bolts carefully to avoid damaging any air and electrical lines routed in the channel of the frame rail.

6. Tighten the top bracket flange screws 21 lbf·ft (28 N·m).
7. Tighten the radiator mounting flange screws 11 lbf·ft (15 N·m).
8. Connect the batteries.
9. At the powertrain PDM (**Fig. 6**), check the coolant pump fuse at position F4. If the size of the fuse does not match the rating indicated on the PDM cover, replace it with the correct one from the kit
10. Install the new HEV system check lamp assembly from the kit.
    - 10.1 Remove the dash panel cover and center dash panel.
    - 10.2 Replace the warning light with the new one included in the kit. See **Fig. 7**
11. Clean a spot on the base label (Form WAR259) and attach a grey completion sticker for SF453 (Form WAR261) to indicate the work has been completed.

SF453C: Replace Check Lamp Assembly Only

1. Remove the dash panel cover and center dash panel.
2. Replace the warning light with the new one included in the kit. See **Fig. 7**
3. Clean a spot on the base label (Form WAR259) and attach a grey completion sticker for SF453 (Form WAR261) to indicate the work has been completed.

SF453D: Install Support Bracket Only

1. Disconnect the 12V batteries.
2. Loosen, but do not remove the top two bolts on the existing front cooler bracket. See **Fig. 3**.
3. Loosen the front two radiator mounting bolts.
4. Orient the upper radiator hose clamp so that the release tabs point down. See **Fig. 5**. This will prevent rubbing issues and allow the hose clamp to be removed without removing the radiator bracket.
5. Place the new bracket as shown in **Fig. 4**. (Note: Kit 25-SF431-003 comes with two brackets, but only one is used for the repair.)

IMPORTANT: Tighten the top bracket bolts carefully to avoid damaging any air and electrical lines routed in the channel of the frame rail.

6. Tighten the top bracket flange screws 21 lbf·ft (28 N·m).
7. Tighten the radiator mounting flange screws 11 lbf·ft (15 N·m).
8. Connect the batteries.
9. Clean a spot on the base label (Form WAR259) and attach a grey completion sticker for SF453 (Form WAR261) to indicate the work has been completed.

Table of Contents

Product Recall

To: ALL DEALERS

From: TRACY SAUERBREY – WARRANTY/RECALL DEPARTMENT

Subject: RECALL 11V-204/11V-205 Federal Data Label, Tire & Loading Placard

Date: May 17, 2011

Enclosed are copies of the customer notification letter and the repair procedures for Recall 11V-204/11V-205. This recall involves certain Minotour school and non school model buses manufactured between April 17, 2000 and December 21, 2009. The non-conformity involves the certification label. The labels state load range "D" tires. The vehicles are equipped with load range "E" tires. Incorrect tire information may lead to tire overloading or over inflation possibly resulting in a tire failure which may lead to a vehicle crash.

This is a universal notification sent to all dealers. You may or may not have customers in your area affected by this recall. If owners in your area are subject to this recall, we have enclosed a printout listing those customers' names and addresses. If there is not a printout enclosed according to our records there are no units in your area involved**. If you have a printout and any of the units on it are still in your possession it is your responsibility to ensure the recall is performed before the unit is delivered to the customer. NEW PROCESS: NHTSA is requiring two different recall numbers and printouts for school versus non school units. If you have received two reports you will notice that Recall 11V-204 is for school buses and Recall 11V-205 is for non-school buses. This is the same recall with the same repair for both school and non school just a different recall number.**

The remedy will consist of replacing with a new label. It will take approximately .1hour (SRT 90-119). **Attached is a form that must be filed out completely to receive the new labels. There will be no parts handling.**

Thomas Built Buses has elected to notify all customers directly. Your customers will be contacting you to schedule an appointment for repairs.

If you know of any customers who own or operate a Thomas bus in this recall, whose name and address is NOT listed or is INCORRECTLY listed on the enclosed printout, please promptly notify Thomas Built Buses of that additional information in writing. Thank you for your cooperation and assistance.

Tracy
Enclosures: Customer Letter Repair Procedure Printout (if applicable)

May 24, 2011

Recall 11V-204

This notice is sent to you in accordance with the requirements of the National Traffic and Motor Vehicle Safety Act. Thomas Built has decided that certain Minotour model school buses manufactured between April 17, 2000 and August 29, 2008 fail to conform to the requirements of Federal Motor Vehicle Safety Standard No. 110, "Tire Selection and Rims". These units are identified on the enclosed postcard (Form PSD 304).

The non-conformity involves the certification label. The labels state load range "D" tires. The vehicles are equipped with load range "E" tires. Incorrect tire information may lead to tire overloading possibly resulting in a tire failure which may lead to a vehicle crash.

You should immediately contact your Thomas Built Buses dealer for an appointment to have your vehicle modified. Thomas will remedy this noncompliance without charge. The remedy will consist of replacing all labels. It will take approximately .1 hour per unit **To arrange for repairs, contact your local Thomas Built Buses dealer. After the repair is made, please complete each postage paid card separately and return it to Thomas Built Buses to verify completion.**

The postcard must be filled out and returned:

Once the vehicle repair has been completed
Once it has been determined that the vehicle does not need repair
If you no longer own the vehicle
If the vehicle identified on the postcard has been exported, stolen, or destroyed/totaled

Federal law requires that any vehicle lessor receiving the recall notice must forward a copy of this notice to the lessee within 10 days.

If you have had your vehicle repaired due to this defect prior to receipt of this notice and you have incurred any costs, you may be eligible for reimbursement. For further information, please contact the Customer Support office at (336) 889-4871, 8 a.m. to 5 p.m. eastern standard time Monday through Friday. To find a dealer in your area please go to www.thomasbus.com.

If the defect is not remedied without charge and within a reasonable time which is not longer than 60 days after you tender the vehicle for repair, also please contact the Customer Support Office at (336) 889-4871, 8:00 a.m. to 5:00 p.m. Eastern Time, Monday through Friday. If you believe that Thomas Built Buses has failed or is unable to remedy the defect without charge longer than 60 days, you may submit a complaint to the Administrator, National Highway Traffic Safety Administration, 1200 New Jersey Avenue, S.E., Washington, DC 20590, or phone the Vehicle Safety Hotline at 1-888-327-4236 (TTY: 1-800-424-9153) or go to http://www.safercar.gov. In Canada, if after contacting your dealer and/or Manufacturer Customer Service you have additional questions with regards to this recall, you may contact Transport Canada – road Safety, 80 rue Noel, Gatineau, Quebec J8Z 0A1 or call 1-800-333-0510.

Sincerely,

Tracy Sauerbrey
Warranty/Recall Department

Enclosure

May 24, 2011

Recall 11V-205

This notice is sent to you in accordance with the requirements of the National Traffic and Motor Vehicle Safety Act. Thomas Built has decided that certain Minotour model non-school buses manufactured between April 17, 2000 and November 28, 2001 fail to conform to the requirements of Federal Motor Vehicle Safety Standard No. 110, "Tire Selection and Rims". These units are identified on the enclosed postcard (Form PSD 304).

The non-conformity involves the certification label. The labels state load range "D" tires. The vehicles are equipped with load range "E" tires. Incorrect tire information may lead to tire overloading possibly resulting in a tire failure which may lead to a vehicle crash.

You should immediately contact your Thomas Built Buses dealer for an appointment to have your vehicle modified. Thomas will remedy this noncompliance without charge. The remedy will consist of replacing all labels. It will take approximately .1 hour per unit. **To arrange for repairs, contact your local Thomas Built Buses dealer. After the repair is made, please complete each postage paid card separately and return it to Thomas Built Buses to verify completion.**

The postcard must be filled out and returned:

Once the vehicle repair has been completed
Once it has been determined that the vehicle does not need repair
If you no longer own the vehicle
If the vehicle identified on the postcard has been exported, stolen, or destroyed/totaled

Federal law requires that any vehicle lessor receiving the recall notice must forward a copy of this notice to the lessee within 10 days.

If you have had your vehicle repaired due to this defect prior to receipt of this notice and you have incurred any costs, you may be eligible for reimbursement. For further information, please contact the Customer Support office at (336) 889-4871, 8 a.m. to 5 p.m. eastern standard time Monday through Friday. To find a dealer in your area please go to www.thomasbus.com.

If the defect is not remedied without charge and within a reasonable time which is not longer than 60 days after you tender the vehicle for repair, also please contact the Customer Support Office at (336) 889-4871, 8:00 a.m. to 5:00 p.m. Eastern Time, Monday through Friday. If you believe that Thomas Built Buses has failed or is unable to remedy the defect without charge longer than 60 days, you may submit a complaint to the Administrator, National Highway Traffic Safety Administration, 1200 New Jersey Avenue, S.E., Washington, DC 20590, or phone the Vehicle Safety Hotline at 1-888-327-4236 (TTY: 1-800-424-9153) or go to http://www.safercar.gov. In Canada, if after contacting your dealer and/or Manufacturer Customer Service you have additional questions with regards to this recall, you may contact Transport Canada – road Safety, 80 rue Noel, Gatineau, Quebec J8Z 0A1 or call 1-800-333-0510.

Sincerely,

Tracy Sauerbrey
Warranty/Recall Department

Enclosure

Table of Contents

Product Recall

Campaign 11V-204/11V-205 Federal Data Label, Tire & Loading Placard

Name:

TBB Dealer Number:

Body Number(s): (All body numbers on this form will go to the same address)

Shipping Information:

Name:

Street Address:

City/State/ Zip:

Please forward completed form to Tracy Sauerbrey at Tracy.sauerbrey@daimler.com or fax to 336-878-4104
ATTN: TRACY SAUERBREY - RECALLS

RECALL #11V-204 & 11V-205

REPAIR PROCEDURE

MODEL: MINOTOUR

SUBJECT: FEDERAL DATA LABEL, TIRE & LOADING PLACARD

PAGE: 1 OF 2

IMPORTANT: READ ENTIRE PROCEDURE BEFORE BEGINNING.

1. Locate existing Federal Data Label and Tire & Loading Placard.
2. Confirm that the Data Label and Placard VIN number and Body number match existing Data Label and Placard.
3. Remove existing clear Cover. Start in one corner as shown in **Figure 1.**
4. Carefully, remove "VOID" remains with razor blade. **Figure 2**

Figure 1

Figure 2

5. Remove any leftover adhesive with an adhesive remover.
6. Clean mounting location with a general purpose cleaner; wipe dry.

Note: In steps 7 & 8, you are instructed to install the Federal Data Label and the Tire & Loading Placard. Due to limited space, install these labels within 1/8" of each other.

7. Install the new Data Label in the area shown in **Figure 3.**
8. Install the new Placard 1/8" above the Data Label. **Figure 4**

Figure 3

Figure 4

9. Cover all new labels with the new Clear Acetate Label Cover(s). **Figure 5.**

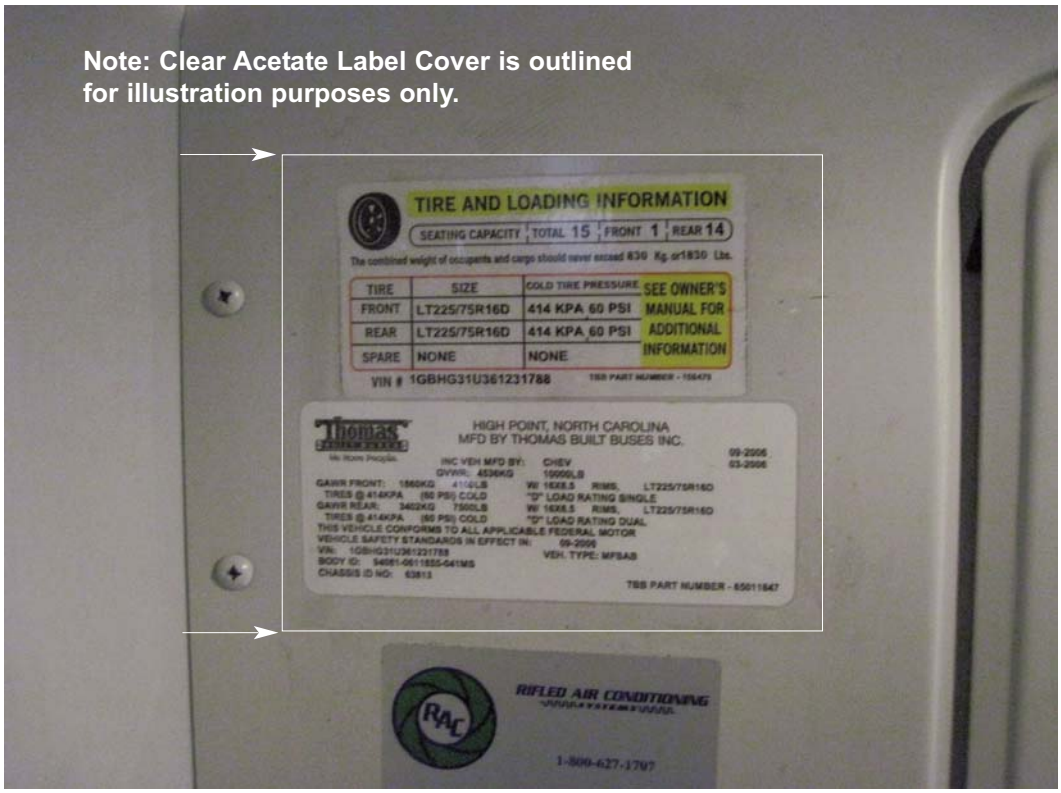

Figure 5

Table of Contents

Product Recall

To: ALL DEALERS

From: TRACY SAUERBREY – WARRANTY/RECALL DEPARTMENT

Subject: RECALL 11V-222/11V-223 EM1 Gen V Evaporator Units - Carrier

Date: May 13, 2011

Enclosed are copies of the customer notification letter and the repair procedures for Recall 11V-222/11V-223. This recall involves certain MVP-EF, Saf-T-Liner C2, HDX, FS-65 and Minotour school and non school model buses manufactured between January 2, 2006 and January 31, 2011. The defect involves the Carrier EM-1 units. These may have a fuse holder defect, in which, due to time and temperature, the fuse holder may relax. Through relaxation of fuse holder contacts over time, a high-resistance connection may result, possibly producing arching. The arching may produce melting of the fuse holder or ignition of the fuse holder, which may cause flame or smoke to propagate within the EM-1 unit.

This is a universal notification sent to all dealers. You may or may not have customers in your area affected by this recall. If owners in your area are subject to this recall, we have enclosed a printout listing those customers' names and addresses. If there is not a printout enclosed according to our records there are no units in your area involved**. If you have a printout and any of the units on it are still in your possession it is your responsibility to ensure the recall is performed before the unit is delivered to the customer. NEW PROCESS: NHTSA is requiring two different recall numbers and printouts for school versus non school units. If you have received two reports you will notice that Recall 11V-222 is for school buses and Recall 11V-223 is for non-school buses. This is the same recall with the same repair for both school and non school just a different recall number.**

The remedy will consist of inspection to determine if the unit requires the rework. If it is determined the unit needs rework a retrofit kit will be provided. It will take approximately .1 hour (SRT 90-116) for inspection and .5 hour (SRT 90-117) for this repair. Once it has been identified that the unit requires the fuse assembly upgrade, the serial number of the unit should be recorded for each affected unit. **Please contact Carrier Recall Hotline at (800) 793-4741 to receive your kit(s) at no charge. THE SERIAL NUMBER OF EACH UNIT WILL BE REQUIRED WHEN KITS ARE ORDERED. You will receive labor reimbursement by filing a warranty claim through Thomas Built Buses, Inc. This is a vendor recall therefore there will be no parts handling.**

Thomas Built Buses has elected to notify all customers directly. Your customers will be contacting you to schedule an appointment for repairs.

If you know of any customers who own or operate a Thomas bus in this recall, whose name and address is NOT listed or is INCORRECTLY listed on the enclosed printout, please promptly notify Thomas Built Buses of that additional information in writing. Thank you for your cooperation and assistance.

Tracy
Enclosures: Customer Letter Repair Procedure Printout (if applicable)

May 20, 2011

Recall 11V-222
TC2011-142

This notice is sent to you in accordance with the requirements of the National Traffic and Motor Vehicle Safety Act and the Canada Motor Vehicle Safety Act. Thomas Built has decided that a defect which relates to motor vehicle safety exists on certain Saf-T-Liner C2, HDX, MVP-EF, FS-65, and Minotour model school buses manufactured between January 2, 2006 and January 31, 2011. These units are identified on the enclosed postcard (Form PSD 304).

The defect involves the EM-1units. These may have a fuse holder defect, in which, due to time and temperature, the fuse holder may relax. Through relaxation of fuse holder contacts over time, a high-resistance connection may result, possibly producing arching. The arching may produce melting of the fuse holder or ignition of the fuse holder, which may cause flame or smoke to propagate within the EM-1 unit.

You should immediately contact your Thomas Built Buses dealer for an appointment to have your vehicle modified. Thomas will remedy this defect without charge. The remedy will consist of inspection to determine if the unit requires the rework. If it is determined the unit needs rework a retrofit kit composed of a new fuse holder configuration, inclusive of a fuse, connectors and complete installation instructions will be provided. It will take approximately .1 for inspection and .5 hour per unit for this repair. **To arrange for repairs, contact your local Thomas Built Buses dealer. After the repair is made, please complete each postage paid card separately and return it to Thomas Built Buses to verify completion.**

The postcard must be filled out and returned:

Once the vehicle has been completed
Once it has been determined that the vehicle does not need repair
If you no longer own the vehicle
If the vehicle identified on the postcard has been exported, stolen, or destroyed/totaled

Federal law requires that any vehicle lessor receiving the recall notice must forward a copy of this notice to the lessee within 10 days.

If you have had your vehicle repaired due to this defect prior to receipt of this notice and you have incurred any costs, you may be eligible for reimbursement. For further information, please contact the Warranty Department at (336) 889-4871, 8 a.m. to 5 p.m. eastern standard time Monday through Friday. To find a dealer in your area please go to www.thomasbus.com.

If the defect is not remedied without charge and within a reasonable time which is not longer than 60 days after you tender the vehicle for repair, also please contact the Warranty Department at (336)889-4871, 8:00 a.m. to 5:00 p.m. Eastern Time, Monday through Friday. If you believe that Thomas Built Buses has failed or is unable to remedy the defect without charge longer than 60 days, you may submit a complaint to the Administrator, National Highway Traffic Safety Administration, 1200 New Jersey Avenue, S.E., Washington, DC 20590, or phone the Vehicle Safety Hotline at 1-888-327-4236 (TTY: 1-800-424-9153) or go to http://www.safercar.gov. In Canada, if after contacting your dealer and/or Manufacturer Customer Service you have additional question with regards to this recall, you may contact Transport Canada – road Safety, 80 rue Noel, Gatineau, Quebec J8Z 0A1 or call 1-800-333-0510.

Sincerely,

Tracy Sauerbrey
Warranty/Recall Department

Enclosure

May 20, 2011

Recall 11V-223
TC2011-143

This notice is sent to you in accordance with the requirements of the National Traffic and Motor Vehicle Safety Act and the Canada Motor Vehicle Safety Act. Thomas Built has decided that a defect which relates to motor vehicle safety exists on certain Saf-T-Liner C2, HDX, MVP-EF, FS-65, and Minotour model non school buses manufactured between January 2, 2006 and January 31, 2011. These units are identified on the enclosed postcard (Form PSD 304).

The defect involves the Carrier EM-1units. These may have a fuse holder defect, in which, due to time and temperature, the fuse holder may relax. Through relaxation of fuse holder contacts over time, a high-resistance connection may result, possibly producing arching. The arching may produce melting of the fuse holder or ignition of the fuse holder, which may cause flame or smoke to propagate within the EM-1 unit.

You should immediately contact your Thomas Built Buses dealer for an appointment to have your vehicle modified. Thomas will remedy this defect without charge. The remedy will consist of inspection to determine if the unit requires the rework. If it is determined the unit needs rework a retrofit kit composed of a new fuse holder configuration, inclusive of a fuse, connectors and complete installation instructions will be provided. It will take approximately .1 for inspection and .5 hour per unit for this repair. **To arrange for repairs, contact your local Thomas Built Buses dealer. After the repair is made, please complete each postage paid card separately and return it to Thomas Built Buses to verify completion.**

The postcard must be filled out and returned:

Once the vehicle has been completed
Once it has been determined that the vehicle does not need repair
If you no longer own the vehicle
If the vehicle identified on the postcard has been exported, stolen, or destroyed/totaled

Federal law requires that any vehicle lessor receiving the recall notice must forward a copy of this notice to the lessee within 10 days.

If you have had your vehicle repaired due to this defect prior to receipt of this notice and you have incurred any costs, you may be eligible for reimbursement. For further information, please contact the Warranty Department at (336) 889-4871, 8 a.m. to 5 p.m. eastern standard time Monday through Friday. To find a dealer in your area please go to www.thomasbus.com.

If the defect is not remedied without charge and within a reasonable time which is not longer than 60 days after you tender the vehicle for repair, also please contact the Warranty Department at (336)889-4871, 8:00 a.m. to 5:00 p.m. Eastern Time, Monday through Friday. If you believe that Thomas Built Buses has failed or is unable to remedy the defect without charge longer than 60 days, you may submit a complaint to the Administrator, National Highway Traffic Safety Administration, 1200 New Jersey Avenue, S.E., Washington, DC 20590, or phone the Vehicle Safety Hotline at 1-888-327-4236 (TTY: 1-800-424-9153) or go to http://www.safercar.gov. In Canada, if after contacting your dealer and/or Manufacturer Customer Service you have additional question with regards to this recall, you may contact Transport Canada – road Safety, 80 rue Noel, Gatineau, Quebec J8Z 0A1 or call 1-800-333-0510.

Sincerely,

Tracy Sauerbrey
Warranty/Recall Department

Enclosure

Service Information

TAC-SER11-001
01-31-11

Subject: EM1 Gen V Evaporator Units

The EM1 GenV blower motor fuse assembly could fail in an unsafe manner, creating a potential fire hazard. We are advising that any units manufactured between January 1, 2006 and December 2010 must have the evaporator motor in-line fuse assembly upgraded with the retrofit kit 74-62056-00. The only units affected are EM1 GenV evaporator modules, part numbers 77-62512-XX and 77-62112-XX, with serial numbers between KNT90890232 and NNE91230058. Customers with EM1 GenV units prior to the above mentioned serial numbers and dates that have had Carrier replacement motors 54-00621-00 installed, will also require this upgrade.

Below are instructions on how to identify and confirm the affected units by the unit identification tag, and visual confirmation of the fuse assembly.

CAUTION: Disconnect the vehicle battery and use proper lockout/tagout procedures for your safety.

1) Remove the cover from the evaporator by removing the 8 screws shown below. Properly support the cover while removing the screws.

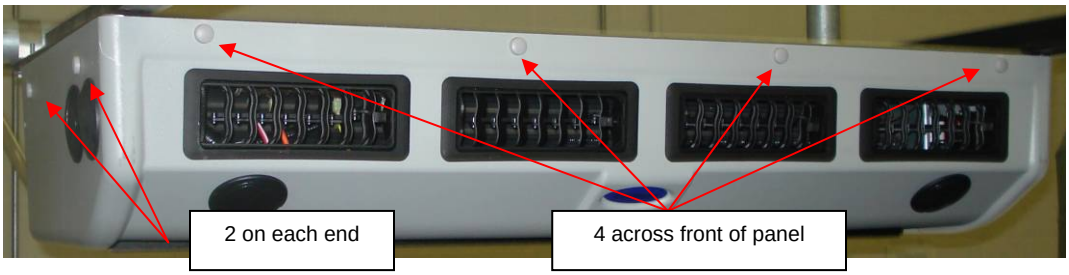

2) Once the cover has been removed, the identification tag containing the unit part number, manufacture date, and serial number can be found on the motor “cradle” mount, as seen in the photo below (on left). Compare the information to the above mentioned manufacture date, and/or serial number. Units employing a fuse holder as appears circled in red below require the upgrade with the new fuse holder.

Serial Number Tag

Old Fuse Holder

New Fuse Holder

3) Once it has been identified that the unit requires the fuse assembly upgrade, the serial number of the unit should be recorded for each affected unit.

4) Carrier has set up a dedicated Hotline to obtain the Retrofit kit required to perform the upgrade. The serial number of each unit **will be required when kits are ordered**. The kit(s) will be shipped to the address provided at no charge. Materials and instructions to perform work will be provided with the kit.

5) The time allowance to perform this re-work is ½ hr. To submit for labor reimbursement, a warranty claim needs to be filed with Carrier. The process and codes to be used are as follows.

    1. In the “Part number” category, enter”PT11-01” (no MPR required).
    2. Under “Job Code” enter “PT11-01 L” (this is for 0.50 hours labor).
    3. Submit claim

Availability of the retrofit kits is expected to be on or about the week of 3/15/2011. After this date, please contact Carrier Recall Hotline at (800) 793-4741 or an authorized Carrier Dealer/Service Center so that your unit can be retrofitted.

Robert Picker

Service/Warranty Manager
Carrier Transicold Division

BD, BU

Carrier A United Technologies Company Carrier Transicold Division P.O. Box 4805 Syracuse, New York 13221 USA	Drawing No. 98-63213	Rev. A
	Date JAN 17, 2011	Sheet 1 of 5
Title: RETRO-FIT KIT INSTRUCTIONS EM1 GENV IN-LINE FUSE	Supersedes	RETROFIT KIT: 74-62056-00

Purpose:

74-62056-00 Retrofit

kit is intended to replace inline fuses to EM1 evaporators built and shipped after Jan 1, 2006. Current inline fuse is removed and replaced with a more robust design as seen below.

BEFORE

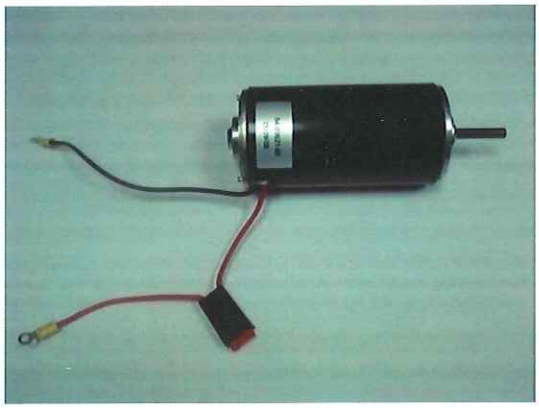

AFTER

Kit Contents:

Item	Part Description	QTY
1	Fuse Holder Assembly (22-62326-00)	1
2	Wire Ties (58-00079-02)	2

Tools Required:

Item	Tool Description
1	Phillips and Standard Screwdriver
2	Diagonal Cutters
3	Wire Strippers
4	Wire Crimpers (Insulated Terminals)
5	Heat Gun

File: This file is located on the Syracuse Server L:\Drafting\Forms\DwgForm.doc	Prepared By:	Approved By:	Date:

Carrier A United Technologies Company Carrier Transicold Division P.O. Box 4805 Syracuse, New York 13221 USA	Drawing No. 98-63213	Rev. A
	Date JAN 17, 2011	Sheet 2 of 5
Title: RETRO-FIT KIT INSTRUCTIONS EM1 GENV IN-LINE FUSE	Supersedes	RETROFIT KIT: 74-62056-00

General Safety Notices:

The following general safety notices supplement specific warnings and cautions appearing elsewhere in this document. They are recommended precautions and must be understood and applied during maintenance/service activities contained herein.

Qualified technician is required for successful installation of this kit. This document does not replace proper technical or safety precautionary training. Refer to Carrier Installation and Service Manuals for more information on safety notices and proper service techniques.

Prior to starting work each day, or starting any new job or task, it is expected that employees will inspect the job for potential hazards. Work must not start until all unsafe conditions are mitigated.

First Aid:
An injury, no matter how slight should never go unattended. Always obtain first aid or medical attention immediately.

Special Precautions:

Always wear appropriate personal protective gear (safety glasses, hearing protections, gloves, safety lanyards).

Keep hands, clothing, and tools, clear of moving parts (engines, condenser and evaporator fans).

No work should be completed unless battery power has been disconnected. Lockout/Tagout procedures should be in place and followed.

Carrier A United Technologies Company Carrier Transicold Division P.O. Box 4805 Syracuse, New York 13221 USA	Drawing No. 98-63213	Rev. A
	Date JAN 17, 2011	Sheet 3 of 5
Title: RETRO-FIT KIT INSTRUCTIONS EM1 GENV IN-LINE FUSE	Supersedes	RETROFIT KIT: 74-62056-00

Step By Step Instructions:

1. Disconnect vehicle battery.
2. Using a standard and phillips screwdriver, properly support and remove the 8 screws securing unit cover to gain access to motor assembly.

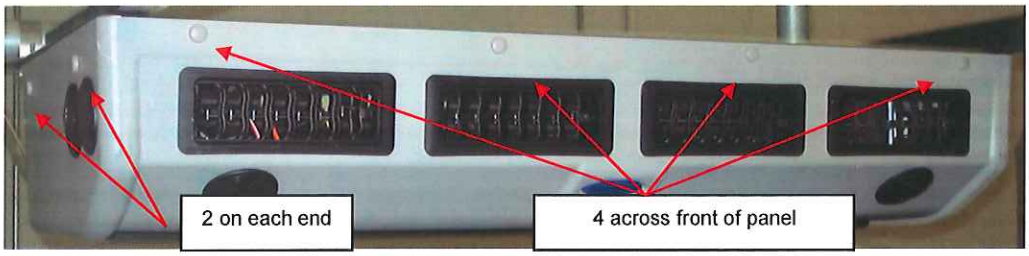

Remove plastic caps to access screws

3. A.) Cut the "red" lead on the motor side of fuse holder. Keep as close to fuse holder as possible. B.) Remove the fused motor lead ring terminal (red wire), from terminal block (Terminal #5 from right). Remove and discard old fuse and holder.

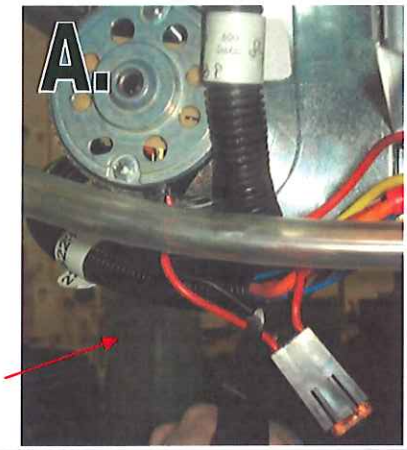

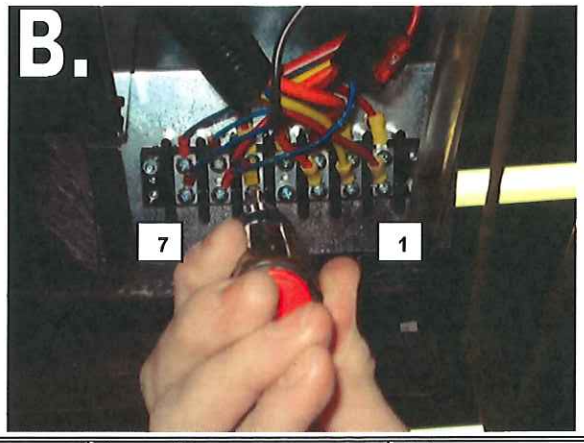

File: This file is located on the Syracuse Server L:\Drafting\Forms\DwgForm.doc	Prepared By:	Approved By:	Date:

Carrier A United Technologies Company Carrier Transicold Division P.O. Box 4805 Syracuse, New York 13221 USA	Drawing No. 98-63213	Rev. A
	Date JAN 17, 2011	Sheet 4 of 5
Title: RETRO-FIT KIT INSTRUCTIONS EM1 GENV IN-LINE FUSE	Supersedes	RETROFIT KIT: 74-62056-00

4. Strip the "red" lead to motor ¼" back to accept the butt splice terminal of the supplied fuse holder assembly.

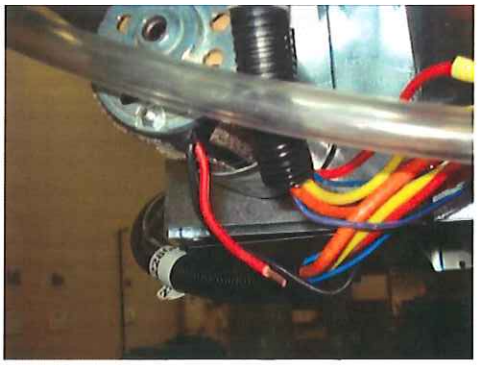

5. A.)Install ring terminal end of new fuse assembly 22-62326-00 onto original (position 5) of terminal block.
   B.)Install "butt" connector end of new fuse assembly 22-62326-00 to red motor lead, strip and prepared earlier.

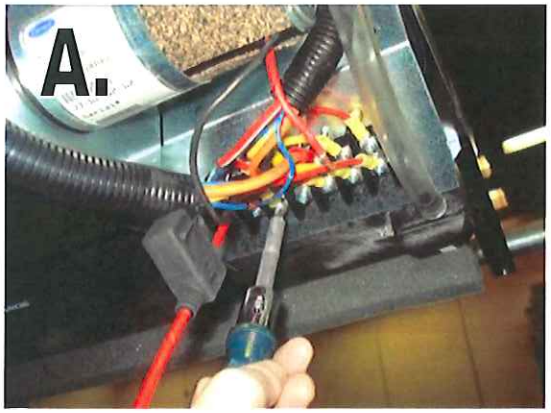

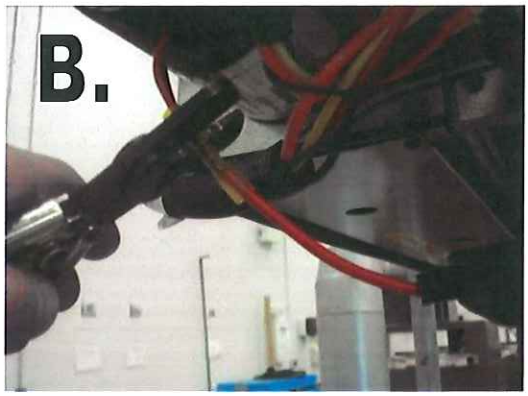

6. Properly heat shrink "butt" connector end of new fuse assembly 22-62326-00 at both ends.

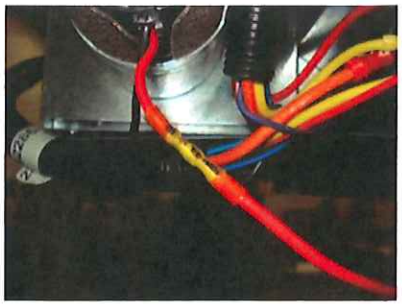

Carrier A United Technologies Company Carrier Transicold Division P.O. Box 4805 Syracuse, New York 13221 USA	Drawing No. 98-63213	Rev. A
	Date JAN 17, 2011	Sheet 5 of 5
Title: RETRO-FIT KIT INSTRUCTIONS EM1 GENV IN-LINE FUSE	Supersedes	RETROFIT KIT: 74-62056-00

7. Secure wiring and fuse holder from chafing, making sure NOT to attach fuse holder to, or in contact with any drain lines, wire loom, or the motor.

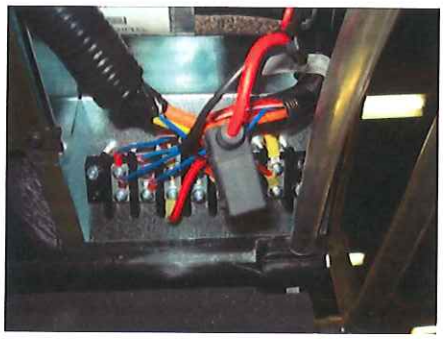

8. Properly support and re-install cover with all hardware.

SAFETY: Take all necessary precautions to properly secure unit cover.

IMPORTANT: Please contact Carrier Transport Technical Service Hot-Line at (800) 450-2211 with any questions or concerns.

SYM	REVISION RECORD	DATE	BY	ENG	ECN
A	INITIAL RELEASE	1/17/11	DNK	HEARN	68N0421P11

File: This file is located on the Syracuse Server L:\Drafting\Forms\DwgForm.doc	Prepared By:	Approved By:	Date:

Table of Contents

Product Recall

To: ALL DEALERS

From: TRACY SAUERBREY – WARRANTY/RECALL DEPARTMENT

Subject: RECALL 11V-503/ TC2011-369 Battery Cable Pass-Thru Corrosion

Date: December 9, 2011

Enclosed are copies of the customer notification letter and the repair procedure for Recall 11V-503. This recall involves certain Saf-T-Liner C2 model school buses manufactured between April 5, 2004 and December 26, 2005. The defect involves the pass-through power cable connections. Under certain environmental conditions the pass-through cable connections located behind the driver's side kick panel may corrode potentially resulting in an electric fault or short circuit. An electric fault or short circuit of an un-fused power cable may result in a vehicle fire.

This is a universal notification sent to all dealers. You may or may not have customers in your area affected by this recall. If owners in your area are subject to this recall, we have enclosed a printout listing those customers' names and addresses. If there is not a printout enclosed according to our records there are no units in your area involved**. If you have a printout and any of the units on it are still in your possession it is your responsibility to ensure the recall is performed before the unit is delivered to the customer.**

The remedy will consist of inspecting and cleaning and adding protection to power cables, it will take approximately .7 hour per unit for this repair. After inspection, if needed the body and/or chassis cables may have to be replaced. (SRT 90-120= .7 inspection/clean/add protection, SRT 90-121= .2 replacement of body cables or pass thru studs, SRT 90-122 = .6 replacement of chassis cables). **PLEASE NOTE: PRE-APPROVAL IS REQUIRED FROM YOUR TBB DISTRICT SERVICE MANAGER BEFORE YOU PERFORM EITHER OF THE LAST TWO REPAIRS. PARTS: Please order your parts individually from your Parts Distribution Center**

Thomas Built Buses has elected to notify all customers directly. Your customers will be contacting you to schedule an appointment for repairs. Reimbursement for labor, (if requested) may be obtained by filing a warranty claim.

If you know of any customers who own or operate a Thomas bus in this recall, whose name and address is NOT listed or is INCORRECTLY listed on the enclosed printout, please promptly notify Thomas Built Buses of that additional information in writing. Thank you for your cooperation and assistance.

Tracy
Enclosures: Customer Letter Repair Procedure Printout (if applicable)

December 15, 2011

Recall 11V-503
TC2011-369

This notice is sent to you in accordance with the requirements of the National Traffic and Motor Vehicle Safety Act and also sent in accordance with the requirements of the Canada Motor Vehicles Safety Act. Thomas Built has decided that a defect which relates to motor vehicle safety exists on certain Saf-T-Liner C2 model school buses manufactured between April 5, 2004 and December 26, 2005. These units are identified on the enclosed postcard (Form PSD 304).

The defect involves the pass-through power cable connections. Under certain environmental condition the pass-through power cable connections located behind the driver's side kick panel may corrode potentially resulting in an electric fault or short circuit. An electric fault or short circuit of an un-fused power cable may result in a vehicle fire.

You should immediately contact your Thomas Built Buses dealer for an appointment to have your vehicle modified. Thomas will remedy this defect without charge. The remedy will consist of inspecting and cleaning and adding protection to power cables, it will take approximately .7 hour per unit for this repair. After inspection, if needed the body and/or chassis cables may be replaced. **To arrange for repairs, contact your local Thomas Built Buses dealer. After the repair is made, please complete each postage paid card separately and return it to Thomas Built Buses to verify completion.**

The postcard must be filled out and returned:

- **Once the vehicle has been completed**
- **Once it has been determined that the vehicle does not need repair**
- **If you no longer own the vehicle**
- **If the vehicle identified on the postcard has been exported, stolen, or destroyed/totaled**

Federal law requires that any vehicle lessor receiving the recall notice must forward a copy of this notice to the lessee within 10 days.

If you have had your vehicle repaired due to this defect prior to receipt of this notice and you have incurred any costs, you may be eligible for reimbursement. For further information, please contact the Warranty Department at (336) 889-4871, 8 a.m. to 5 p.m. eastern standard time Monday through Friday. To find a dealer in your area please go to www.thomasbus.com. Owners may be liable for any progressive damage that results from its failure to complete campaigns within a reasonable time after receiving notification.

If the defect is not remedied without charge and within a reasonable time which is not longer than 60 days after you tender the vehicle for repair, also please contact the Warranty Department at (336)889-4871, 8:00 a.m. to 5:00 p.m. Eastern Time, Monday through Friday. If you believe that Thomas Built Buses has failed or is unable to remedy the defect without charge longer than 60 days, you may submit a complaint to the Administrator, National Highway Traffic Safety Administration, 1200 New Jersey Avenue, S.E., Washington, DC 20590, or phone the Vehicle Safety Hotline at 1-888-327-4236 (TTY: 1-800-424-9153) or go to http://www.safercar.gov. In Canada, if after contacting your dealer and/or Manufacturer Customer Service you have additional question with regards to this recall, you may contact Transport Canada – road Safety, 80 rue Noel, Gatineau, Quebec J8Z 0A1 or call 1-800-333-0510.

Sincerely,

Tracy Sauerbrey
Warranty/Recall Department

Enclosure

REPAIR PROCEDURE

RECALL #11V-503, TC2011-369

MODEL: SAF-T-LINER C2

SUBJECT: BODY BATTERY CABLES PASS-THRU CORROSION

PAGE: 1 OF 4

IMPORTANT: READ ENTIRE PROCEDURE BEFORE BEGINNING.

This document is intended to provide general guidance for cleaning and / or replacing of components due to corrosion at the Body Battery Cables Pass-Thru. These cables supply power and ground to the body power distribution module located in the driver's left hand control cabinet. The pass-thru studs are located in the floor beneath the control cabinet. The main focus will be to remove a section of floor covering and clean, torque, and protect body battery cables and pass-thru studs inside and outside the cab. After cleaning, if any of these listed components have eroded beyond safe usage, the component should be replaced. Refer to the component list at the end of this document.

1. Make sure the ignition is in the "Off" position. Chock the tires and disconnect the batteries.

2. Remove the lower panel at the left-hand drivers control cabinet. Locate the body battery power cables and pass-thru studs. Confirm the location of the pass-thru studs beneath the floor under the vehicle. These are just behind the left front fender.

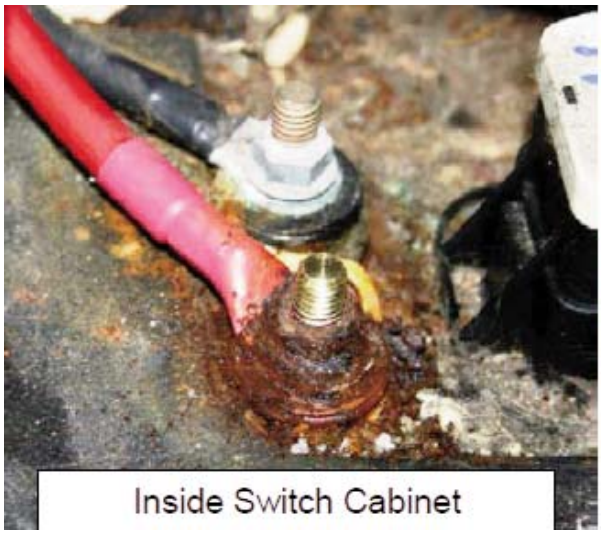

Inside Switch Cabinet

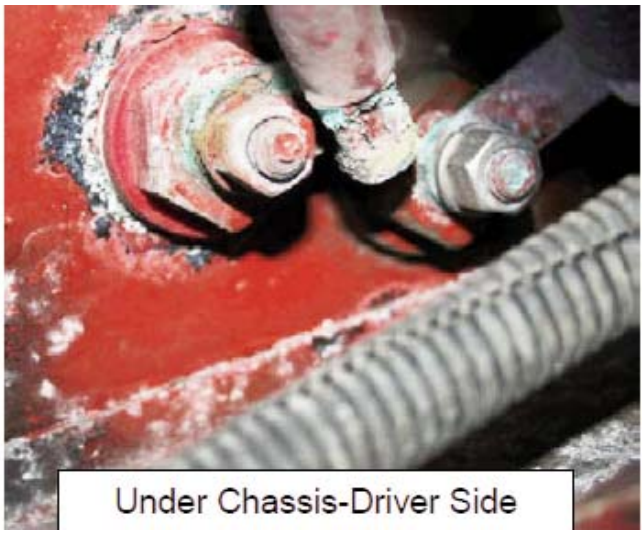

Under Chassis-Driver Side

3. A section of the floor covering will be removed. For units built prior to access panels, note the marks or left by the cabinet panel. Mark a cutting line ¾ of an inch to the inside of the cabinet. This will ensure the panel will overlap the floor covering when reinstalled.

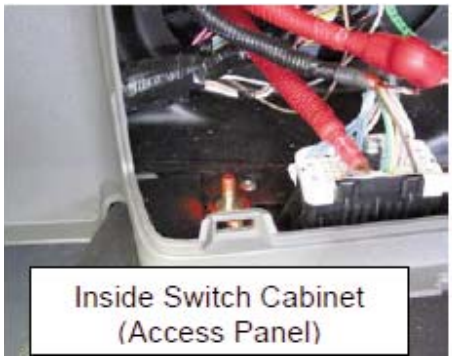
Inside Switch Cabinet (Access Panel)

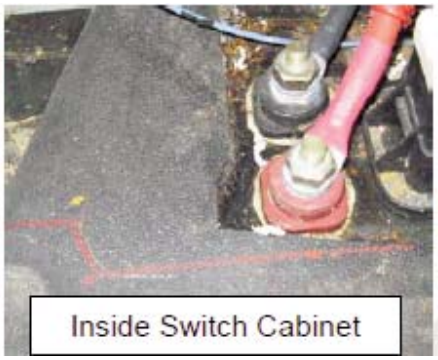
Inside Switch Cabinet

Inside Switch Cabinet

4. Cut along the inside of the cabinet bottom (access panel), or marked line down to the floor pan. Pull up and remove the floor covering that is located under the control cabinet. Clean out any debris (metal or plastic shavings, dirt, rocks, sand) that may be trapped around the pass-thru studs.

5. Remove the battery cables from the pass-thru studs above and below the floor. If the unit is built with horizontal mounted CHM / EXM, the modules can be removed from the mounting bracket to access the studs. Clean the loose scale, if present, from the cable terminal ends, hardware, and pass-thru studs top and bottom. Determine if these components can be cleaned and reused, or if they should be replaced due to corrosion erosion. See material list at the end of this procedure for component part numbers that need replaced.

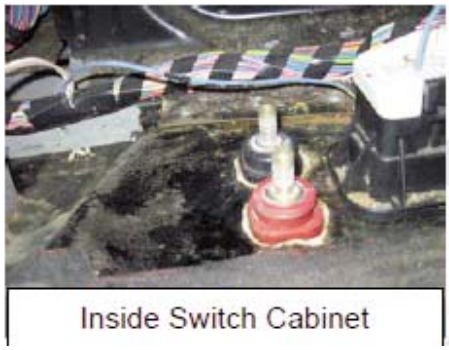
Inside Switch Cabinet

Under Chassis-Driver Side

Chassis w/ CHM Removed

6. Clean the cable terminal ends, hardware, and pass-thru studs top and bottom so that no corrosion is present. To gain better access to the pass-thru studs, the nylon mounting nuts below the floor can be removed so the studs can be cleaned while removed from the vehicle.

7. For reassembly, be sure all components are clean and dry.

8. If removed or replaced, reinstall the pass-thru studs and attach the body battery cables. Torque the nylon mounting nuts to 5.0 – 7.0 FT-LBS. Torque the brass terminal studs (top & bottom) to 7.4 – 8.85 FT-LBS.

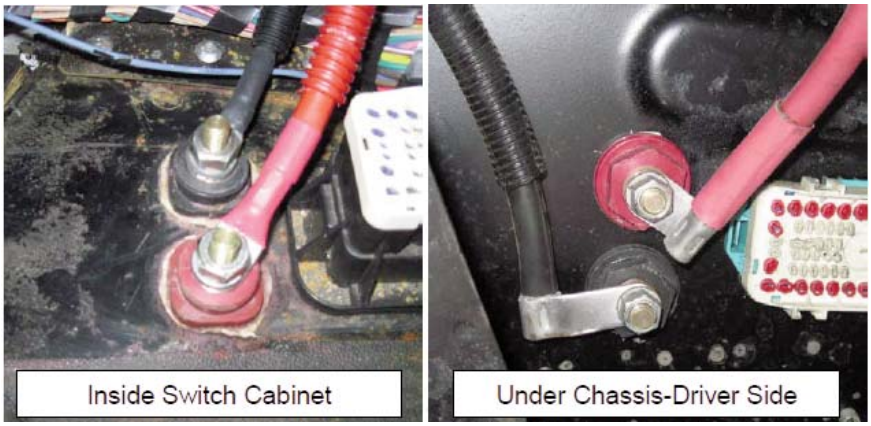

9. Apply a liberal amount of Red Varnish Dielectric Sealer to the exposed metal battery cable terminals, pass-thru studs, and hardware. Be sure to cover all the exposed metal completely.

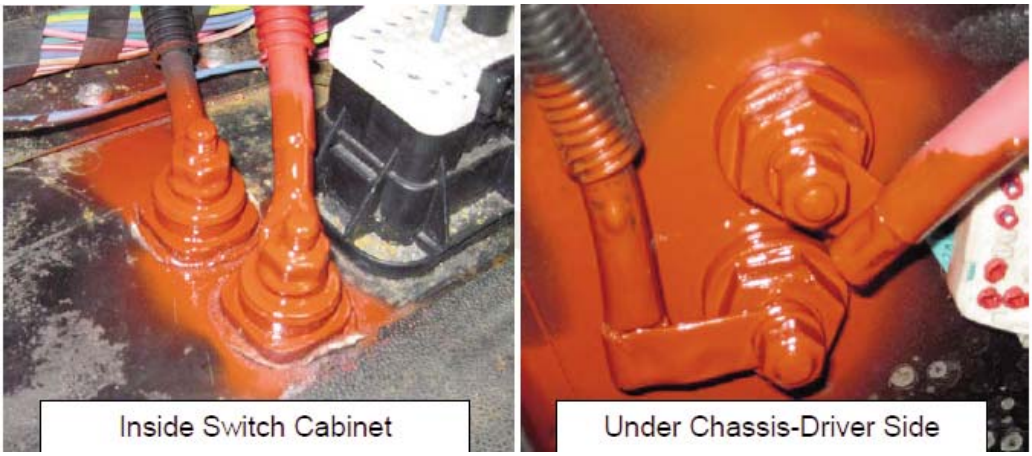

10. Reinstall the lower panel of the drivers control cabinet.

11. Connect the batteries and remove the tire chocks.

SRT Time Allowance	
INSPECT, CLEAN, ASSEMBLE AND ADD PROTECTION TO POWER CABLES	0.7 HRS.
REPLACEMENT OF BODY CABLES OR PASS-THRU STUDS (PRE-APPROVAL FROM TBB DISTRICT SERVICE MANAGER REQUIRED)	0.2 HRS.
REPLACEMENT OF CHASSIS CABLES (PRE-APPROVAL FROM TBB DISTRICT SERVICE MANAGER REQUIRED.)	0.6 HRS.

COMPONENT LIST:

TOTAL REPLACEMENT (MFJB INSIDE BATTERY BOX)	
PART NUMBER	DESCRIPTION
TBB 146992	CABLE, GROUND RETURN, JUNCTION TO PDM MAIN BODY
TBB 146993	CABLE, POWER SUPPLY, JUNCTION TO PDM MAIN BODY
A06-49120-107	POWER - CABLE, POSITIVE, 1GA, 5/16, 3/8 (MFJB INSIDE BATTERY BOX)
A06-49119-092	POWER - CABLE, NEGATIVE, 1GA, 3/8-3/8 FLAG (MFJB INSIDE BATTERY BOX)
A06-65736-082	POWER - CABLE, POSITIVE, 1GA, 5/16, 3/8, 82” (MFJB OUTSIDE BATTERY BOX)
A06-65737-056	POWER - CABLE, NEGATIVE, 1GA, 3/8-3/8 FLAG (MFJB OUTSIDE BATTERY BOX)
23-13718-003	STUD, PASS-THRU, ELEC, 3/8-16, RED
23-13770-000	NUT - MOUNT, 3/4-16UNF, NYLON, RED
23-13718-004	STUD, PASS-THRU, ELEC, 3/8-16, BLACK
23-13770-001	NUT - MOUNT, 3/4-16UNF, NYLON, BLACK
23-11677-002	NUT - HEX, SST, 3/8-16 UNC
23-09983-038	WASHER - LOCK, SST, 3/8”
TBB 171770	CONSUMABLES (RED INSULATING VARNISH, CLEANER, ABRASIVE, ETC.)
	MFJB = MEGA FUSE JUNCTION BOX

Table of Contents

Product Recall

To: ALL DEALERS

From: TRACY SAUERBREY – WARRANTY/RECALL DEPARTMENT

Subject: RECALL 11V-517 –SpectAL Push out Window Handle

Date: December 8, 2011

Enclosed are copies of the customer notification letter and the repair procedures for Recall 11V-517. This recall involves certain Minotour and EF model school buses manufactured between July 26, 2011 and August 9, 2011. The defect involves the emergency vertical push out windows. Incorrect rivets may have been used to attach the handles that an occupant would use to open the window in the event of an emergency. If the handle is actuated during a non-emergency situation and detaches, the emergency window cannot be resecured, posing a risk that children may fall or climb out.

This is a universal notification sent to all dealers. You may or may not have customers in your area affected by this recall. If owners in your area are subject to this recall, we have enclosed a printout listing those customers' names and addresses. If there is not a printout enclosed according to our records there are no units in your area involved**. If you have a printout and any of the units on it are still in your possession it is your responsibility to ensure the recall is performed before the unit is delivered to the customer.**

The remedy will consist of replacing the window stile containing the handle. It will take approximately .2 hour per window for this repair – (SRT 90-123). **Please contact SpectAL at 1-888-773-2825 to obtain your parts. NOTE: SpectAL has all parts packaged by body number; please have this information available when you call.**

Thomas Built Buses has elected to notify all customers directly. Your customers will be contacting you to schedule an appointment for repairs. Reimbursement for labor, (if requested) may be obtained by filing a warranty claim.

If you know of any customers who own or operate a Thomas bus in this recall, whose name and address is NOT listed or is INCORRECTLY listed on the enclosed printout, please promptly notify Thomas Built Buses of that additional information in writing. Thank you for your cooperation and assistance.

Tracy
Enclosures: Customer Letter Repair Procedure Printout (if applicable)

Table of Contents

December 15, 2011

Recall 11V-517

This notice is sent to you in accordance with the requirements of the National Traffic and Motor Vehicle Safety Act. Thomas Built has decided that a defect which relates to motor vehicle safety exists on certain Minotour and EF model school buses manufactured between July 26, 2011 and August 9, 2011. These units are identified on the enclosed postcard (Form PSD 304).

The defect involves the emergency vertical push out windows. Incorrect rivets may have been used to attach the handles that an occupant would use to open the window in the event of an emergency. If the handle is actuated during a non-emergency situation and detaches, the emergency window cannot be re-secured, posing a risk that children may fall or climb out.

You should immediately contact your Thomas Built Buses dealer for an appointment to have your vehicle modified. Thomas will remedy this defect without charge. The remedy will consist of replacing the window stile containing the handle. It will take approximately .2 hour per window for this repair. **To arrange for repairs, contact your local Thomas Built Buses dealer. After the repair is made, please complete each postage paid card separately and return it to Thomas Built Buses to verify completion.**

The postcard must be filled out and returned:

- **Once the vehicle has been completed**
- **Once it has been determined that the vehicle does not need repair**
- **If you no longer own the vehicle**
- **If the vehicle identified on the postcard has been exported, stolen, or destroyed/totaled**

Federal law requires that any vehicle lessor receiving the recall notice must forward a copy of this notice to the lessee within 10 days.

If you have had your vehicle repaired due to this defect prior to receipt of this notice and you have incurred any costs, you may be eligible for reimbursement. For further information, please contact the Warranty Department at (336) 889-4871, 8 a.m. to 5 p.m. eastern standard time Monday through Friday. To find a dealer in your area please go to www.thomasbus.com. Owners may be liable for any progressive damage that results from its failure to complete campaigns within a reasonable time after receiving notification.

If the defect is not remedied without charge and within a reasonable time which is not longer than 60 days after you tender the vehicle for repair, also please contact the Warranty Department at (336)889-4871, 8:00 a.m. to 5:00 p.m. Eastern Time, Monday through Friday. If you believe that Thomas Built Buses has failed or is unable to remedy the defect without charge longer than 60 days, you may submit a complaint to the Administrator, National Highway Traffic Safety Administration, 1200 New Jersey Avenue, S.E., Washington, DC 20590, or phone the Vehicle Safety Hotline at 1-888-327-4236 (TTY: 1-800-424-9153) or go to http://www.safercar.gov. In Canada, if after contacting your dealer and/or Manufacturer Customer Service you have additional question with regards to this recall, you may contact Transport Canada – road Safety, 80 rue Noel, Gatineau, Quebec J8Z 0A1 or call 1-800-333-0510.

Sincerely,

Tracy Sauerbrey
Warranty/Recall Department

Enclosure

Table of Contents

INDEPENDENT INSTRUCTION INSTRUCTION INDÉPENDANTE			
II	003	REV	E

Handle side member change on vertical P/O, installed
Changement du coté de poignée, fenêtre d'urgence verticale installée

WARNING / AVERTISSEMENT

Always follow all Federal, State, Local and Shop safety standards and use proper safety equipment when performing these procedures. Make sure to wear appropriate eye protection when using the tools to perform the repair. Bus must be parked on a level surface and wheels choked. This procedure requires working from ladders or scaffolds to reach the top of the window on outside during repair. Observe all safety precautions to secure the bus from rolling and for use of ladders or scaffolds.

Toujours respecter les lois et règles de sécurité et utiliser les équipements de sécurité requis pendant l'exécution de ces procédures. S'assurer de porter des lunettes de sécurité pour les yeux, lorsque les outils sont utilisés pour effectuer la réparation. L'autobus doit être stationné sur une surface au niveau et les roues bloquées. Ces procédures nécessitent des échelles ou échaffaudages pour atteindre la fenêtre du haut par l'extérieur. Observez toutes les mesures de précautions nécessaires pour empêcher le véhicule, ainsi que les échelles ou échaffaudages, de bouger.

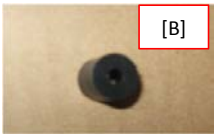

ENG

This kit should contain : Handle side member for replacement [A].

Optional items : Window stop [B] and screw [C] - depending on window's model - please refer to your vertical push-out currently installed on the bus.

FRA

Ce kit de réparation contient les éléments de remplacement suivants : Côté poignée fenêtre [A].

Items optionnels : Butée d'arrêt [B] et une vis [C] - selon le modèle de fenêtre - veuillez vous référer à la fenêtre présentement installée sur l'autobus et qui fera l'objet de remplacement.

RECOMMENDED TOOLS	OUTILS RECOMMANDÉS
1- Power drill	1- Perceuse
2- #2 square drill bit	2- Embout de tournevis carré #2
3- Phillips drill bit (stop installed with screw)	3- Embout de tournevis Phillips (butée de partie mobile installée avec vis)

If you have any questions or uncertain about how to perform this repair, please contact SpectAL (1-888-773-2825) or an authorized dealer.

Si vous avez des questions ou si vous êtes incertains de la façon dont il faut effectuer cette réparation, veuillez appeler au numéro suivant SpectAL (1-888-773-2825) ou tout autre concessionaire authorisé.

ENG

Select and open pushout window to replace part. Designate someone to hold top section (slider) of window firmly at all times while the handle side-member [D] of the window is being replaced.

FRA

Sélectionner et ouvrir la fenêtre d'urgence pour y remplacer le côté poignée de la fenêtre [D]. Désigner quelqu'un pour tenir la partie mobile tout au long du processus de changement de la pièce.

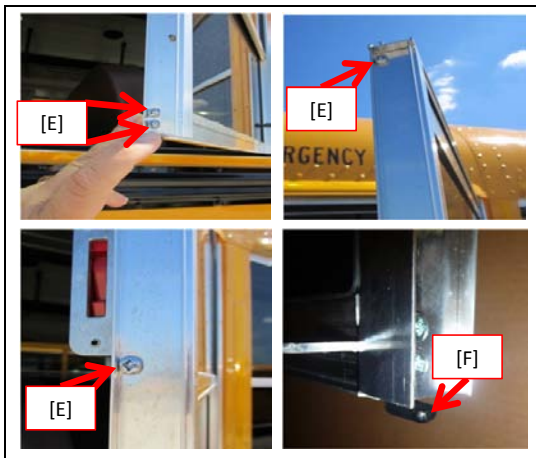	*ENG* *Make sure that top section (slider) of window is closed.* *Open pushout window. Using the #2 square bit & power drill, remove all four (4) screws [E] completely.* *Remove side member starting at the top. Remove spacer [F] at the bottom and set aside to reinstall later.* FRA Fermer la partie mobile de la fenêtre. Ouvrir la fenêtre d'urgence. À l'aide d'une perceuse et d'un embout de tournevis carré #2, retirer complètement les quatre (4) vis [E]. Enlever le coté à partir du haut. Enlever l'espaceur du bas [F], et conserver pour la réinstallation en étape subséquente.
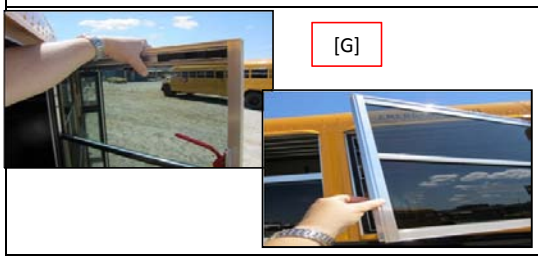	*ENG* ***CAUTION:*** *Be sure that top sliding section [G] of window is being held in place and will not fall. Replace with new side member.* FRA **ATTENTION**: Assurez-vous que la partie mobile coulissante [G] soit bien maintenue en place pour ne pas qu'elle tombe. Remplacez le par le nouveau coté.
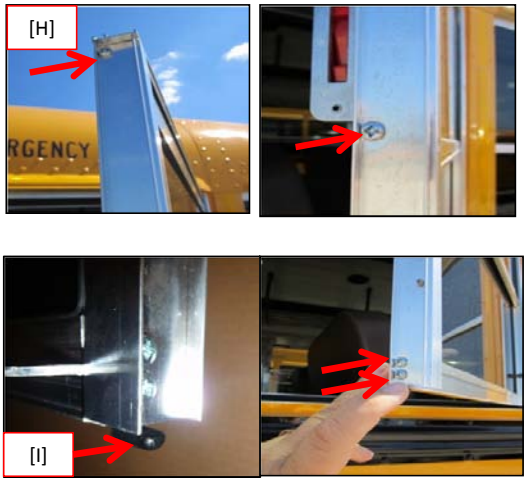	*ENG* *Line-up side-member properly and replace the four screws to secure window frame. Re-install new side-member, inserting the top first [H]. Reinstall spacer correctly [I], making sure that it is inserted all the way in the vertical side member of the window. Using the #2 square bit & power drill, reinstall the four (4) screws, with a torque of 50-54 lb-in. Make sure that no gasket is pinched.* FRA Aligner le coté avec les verres en l'enfonçant bien sur les verres. Ré-installer le bon côté, en insérant au niveau du dessus en premier [H]. Repositionner l'espaceur [I] et insérer complètement au fond du côté de fenêtre vertical. À l'aide d'une perceuse et d'un embout de tournevis carré #2, revisser les quatres (4) vis, avec un couple de serrage de 50-54 livres-pouce. S'assurer que les joints d'étanchéité ne sont pas coincés.
	ENG *If applicable, select the right hole for the window stop position (refer to the part that has just been disassembled). Install the window stop with the screw [J] from the interior of the channel. Use the powerdrill & the philips drill bit.* FRA Si applicable, sélectionner la position de la butée de partie mobile (en vous fiant au coté préalablement retiré). Installez la butée de partie mobile en insérant la vis [J] de l'intérieur du profilé de la fenêtre. Utiliser le perceuse ainsi que l'embout de type philips.
	ENG *Verify that both 'Red Latch-Handle' [K] and top section of sliding window [L] work and engage properly.* FRA Vérifier le bon fonctionnement de la poignée rouge [K] et des loquets du verre coulissant [L].

Daimler Trucks North America LLC

Recall Campaign

January 2012
FL620AB
NHTSA #11V-578 (School Buses)
NHTSA #12V-010 (Non-School Buses)
Transport Canada #11-418

Subject: FCCC Bus Chassis Side Marker/Directional Lights

Models Affected: Specific Thomas Built Buses Saf-T-Liner C2 school buses built on Freightliner Custom Chassis B2 chassis and Freightliner Custom Chassis S2 shuttle bus chassis manufactured January 5, 2011, through July 26, 2011.

General Information

Daimler Trucks North America LLC, on behalf of its wholly owned subsidiary, Freightliner Custom Chassis Corporation, has decided that a defect that relates to motor vehicle safety exists on the vehicles mentioned above.

There are approximately 3,000 vehicles involved in this campaign.

Inaccurate fault detection values in the bulkhead module software may cause the side marker/directional lights to stop functioning after a few minutes of vehicle operation. Lights will resume operation after the vehicle is shut down and restarted. Failure of the side marker/directional lights to illuminate will result in decreased visibility of the bus and/or intended direction of travel and may increase the possibility of a vehicle crash.

The bulkhead module software will be updated.

Additional Repairs

Dealers must complete all outstanding recall and field service campaigns prior to the sale or delivery of a vehicle. A Dealer will be liable for any progressive damage that results from its failure to complete campaigns before sale or delivery of a vehicle.

Owners may be liable for any progressive damage that results from failure to complete campaigns within a reasonable time after receiving notification.

Work Instructions

Please refer to the attached work instructions. Prior to performing the campaign, check the vehicle for a completion sticker (Form WAR260).

Replacement Parts

Replacement parts are not needed for this Recall.

If our records show your dealership has ordered any vehicles involved in campaign number FL620AB, a list of the customers and vehicle identification numbers will be available on AccessFreightliner.com. Please refer to this list when ordering parts for this recall.

Removed Parts

Please follow Warranty Failed Parts Tracking shipping instructions for the disposition of all removed parts.

Labor Allowance

Table 1 - Labor Allowance

Campaign Number	Procedure	Time Allowed (hours)	SRT Code	Damage Code
FL620AB	Update bulkhead module software	0.3	996-0869A	000-Modifiedx

Table 1

Recall Campaign

January 2012
FL620AB
NHTSA #11V-578 (School Buses)
NHTSA #12V-010 (Non-School Buses)
Transport Canada #11-418

IMPORTANT: When the recall has been completed, locate the base completion label in the appropriate location on the vehicle, and attach the red completion sticker provided in the recall kit (Form WAR260). If the vehicle does not have a base completion label, clean a spot on the appropriate location of the vehicle and first attach the base completion label (Form WAR259). If a recall kit is not required or there is no completion sticker in the kit, write the recall number on a blank sticker and attach it to the base completion label.

Claims for Credit

You will be reimbursed for your parts, labor, and handling by submitting your claim through the Warranty system within 30 days of completing this campaign. Please reference the following information in QuickClaim:

- Claim type is **Recall**.
- In the FTL Authorization field, enter the campaign number and appropriate condition code (**FL620A or FL620**).
- In the Primary Failed Part Number field, enter **25-FL620-000**.
- No parts are needed for this Recall.
- In the Labor field, first enter the appropriate SRT from the Labor Allowance Table. For administrative time, enter SRT 939-0010A for 0.3 hours.
- For OWL, the VMRS Component Code is 003-006-008 and the Cause Code is A1- Campaign.
- **Reimbursement for Prior Repairs.** When a customer asks about reimbursement, please do the following.
    - Accept the documentation of the previous repair.
    - Make a brief check of the customer's paperwork to see if the repair may be eligible for reimbursement. (See the "Copy of Owner Letter" section of this bulletin for reimbursement guidelines for this recall.)
    - Submit a Campaign Pre-Approval inquiry to the Warranty Campaigns Department for a decision and authorization number.
    - Include the approved amount on your claim in sublet/outside purchases.
    - In the claim story, first note the authorization number and that the claim includes a reimbursement request.
    - Retain the documentation and provide it to Warranty Campaigns or Claims Processing if requested.
    - When your claim is paid, reimburse the customer the appropriate amount.

IMPORTANT: ServicePro must be viewed prior to performing the recall to ensure the vehicle is involved and the campaign has not been previously completed. Also, check for a completion sticker prior to beginning work.

Contact the Warranty Campaigns Department from 7:00 a.m. to 4:00 p.m. Pacific Time, Monday through Friday, via Web inquiry at AccessFreightliner.com / Support / My Tickets and Submit an Inquiry, or the Customer Assistance Center at (800) 385-4357, after normal business hours, if you have any questions or need additional information.

To return excess kit inventory related to this campaign, U.S. dealers must submit a Parts Authorization Return (PAR) to the Memphis PDC. Canadian dealers must submit a PAR to their facing PDC. All kits must be in resalable condition. PAR requests must include the original purchase invoice number.

The letter notifying vehicle owners is included for your reference.

Please note that the National Traffic and Motor Vehicle Safety Act, as amended (Title 49, United States Code, Chapter 301), requires the owner's vehicle(s) be corrected within a reasonable time after parts are available to you. The Act states that failure to repair a vehicle within 60 days after tender for repair shall be prima facie evidence of an unreasonable time. However, circumstances of a particular situation may reduce the 60 day period. Failure

to repair a vehicle within a reasonable time can result in either the obligation to (a) replace the vehicle with an identical or reasonably equivalent vehicle, without charge, or (b) refund the purchase price in full, less a reasonable allowance for depreciation. The Act further prohibits dealers from selling a vehicle unless all outstanding recalls are performed. Any lessor is required to send a copy of the recall notification to the lessee within 10 days. Any subsequent stage manufacturer is required to forward this notice to its distributors and retail outlets within five working days.

Recall Campaign

Daimler Trucks
North America LLC

January 2012
FL620AB
NHTSA #11V-578 (School Buses)
NHTSA #12V-010 (Non-School Buses)
Transport Canada #11-418

Copy of Notice to Owners

Subject: FCCC Bus Chassis Side Marker/Directional Lights

For the Notice to U.S. Customers: This notice is sent to you in accordance with the requirements of the National Traffic and Motor Vehicle Safety Act.

For the Notice to Canadian Customers: This notice is sent to you in accordance with the Canadian Motor Vehicles Safety Act.

Daimler Trucks North America LLC, on behalf of its wholly owned subsidiary, Freightliner Custom Chassis Corporation, has decided that a defect which relates to motor vehicle safety exists on specific Thomas Built Buses Saf-T-Liner C2 school buses built on Freightliner Custom Chassis B2 chassis and Freightliner Custom Chassis S2 shuttle bus chassis manufactured January 5, 2011, through July 26, 2011.

Inaccurate fault detection values in the bulkhead module software may cause the side marker/directional lights to stop functioning after a few minutes of vehicle operation. Lights will resume operation after the vehicle is shut down and restarted. Failure of the side marker/directional lights to illuminate will result in decreased visibility of the bus and/or intended direction of travel and may increase the possibility of a vehicle crash.

The bulkhead module software will be updated.

Please contact an authorized Daimler Trucks North America dealer to arrange to have the recall performed and to ensure that parts are available at the dealership. To locate an authorized dealer, search online at www.Daimler-TrucksNorthAmerica.com. The Recall will take approximately an hour and will be performed at no charge to you.

You may be liable for any progressive damage that results from your failure to complete the Recall within a reasonable time after receiving notification

If you do not own the vehicle that corresponds to the identification number(s) which appears on the Recall Notification, please return the notification to the Warranty Campaigns Department with any information you can furnish that will assist us in locating the present owner. If you have leased this vehicle, Federal law requires that you forward this notice to the lessee within 10 days. If you are a subsequent stage manufacturer, Federal law requires that you forward this notice to your distributors and retail outlets within five working days. If you have paid to have this recall condition corrected prior to this notice, you may be eligible to receive reimbursement. Please see the reverse side of this notice for details.

For the Notice to U.S. Customers: If you have questions about this Recall, please contact the Warranty Campaigns Department at (800) 547-0712, 7:00 a.m. to 4:00 p.m. Pacific Time Monday through Friday, e-mail address DTNA.Warranty.Campaigns@Daimler.com, or the Customer Assistance Center at (800) 385-4357 after normal business hours. If you are not able to have the defect remedied without charge and within a reasonable time, you may wish to submit a complaint to the Administrator, National Highway Traffic Safety Administration, 1200 New Jersey Avenue, SE., Washington, DC 20590; or call the Vehicle Safety Hotline at (888) 327-4236 (TTY: 800-424-9153); or to http://www.safercar.gov.

For the Notice to Canadian Customers: If you have questions about this Recall, please contact the Warranty Campaigns Department at (800) 547-0712, 7:00 a.m. to 4:00 p.m. Pacific Time Monday through Friday, e-mail address DTNA.Warranty.Campaigns@Daimler.com, or the Customer Assistance Center at (800) 385-4357 after normal business hours.

We regret any inconvenience this action may cause but feel certain you understand our interest in motor vehicle safety.

WARRANTY CAMPAIGNS DEPARTMENT

Enclosure

Daimler Trucks North America LLC

Recall Campaign

January 2012
FL620AB
NHTSA #11V-578 (School Buses)
NHTSA #12V-010 (Non-School Buses)
Transport Canada #11-418

Reimbursement to Customers for Repairs Performed Prior to Recall

If you have already **paid** to have this recall condition corrected you may be eligible to receive reimbursement.

Requests for reimbursement may include parts and labor. Reimbursement may be limited to the amount the repair would have cost if completed by an authorized Daimler Trucks North America LLC dealer. The following documentation must be presented to your dealer for consideration for reimbursement.

Please provide original or clear copies of all receipts, invoices, and repair orders that show:

- The name and address of the person who paid for the repair.
- The Vehicle Identification Number (VIN) of the vehicle that was repaired.
- What problem occurred, what repair was done, when the repair was done.
- Who repaired the vehicle.
- The total cost of the repair expense that is being claimed.
- Proof of payment for the repair (such as the front and back of a cancelled check or a credit card receipt).

Reimbursement will be made by check from your Daimler Trucks North America LLC dealer.

Please speak with your Daimler Trucks North America LLC authorized dealer concerning this matter.

Recall Campaign

Daimler Trucks
North America LLC

January 2012
FL620AB
NHTSA #11V-578 (School Buses)
NHTSA #12V-010 (Non-School Buses)
Transport Canada #11-418

Work Instructions

Subject: FCCC Bus Chassis Side Marker/Directional Lights

Models Affected: Specific Thomas Built Buses Saf-T-Liner C2 school buses built on Freightliner Custom Chassis B2 chassis and Freightliner Custom Chassis S2 shuttle bus chassis manufactured January 5, 2011, through July 26, 2011.

Bulkhead Module Software Update

IMPORTANT: This procedure must be completed using the ServiceLink® diagnostic program.

1. Check the base label (Form WAR259) for a completion sticker for FL620 (Form WAR260) indicating this work has been done. The base label is usually located above the driver's window in buses. If a sticker for FL620 is present, no work is needed. If no sticker is present, continue with the next step.
2. Park the vehicle on a level surface, shut down the engine, and apply the parking brake. Chock the tires.
3. Connect the laptop being used to a power adapter, then connect the laptop connector to the diagnostic connector. See **Fig. 1**.
4. Turn the ignition switch to the "ON" position, or connect a battery charger to the vehicle.
5. In ServiceLink, click "Bulkhead Module."
6. Next, click "Features."
7. Click "Refresh Features List."
8. A message screen will appear showing "vehicle update successful." Click "OK."
9. Once the update is finished, verify that the reference parameter 26-02000-001 has the new release number P35129-C6.
10. Remove the laptop connector from the diagnostic connector.
11. Clean a spot on the base label (Form WAR259), write the Recall number, FL620, on a blank completion sticker (Form WAR260), and attach it to the base label.

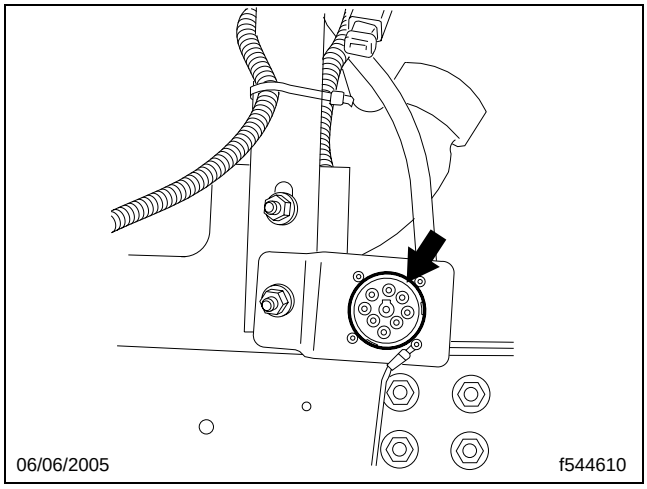

Fig. 1, Diagnostic Connector (location will vary)

Daimler Trucks North America LLC

Recall Campaign

January 2012
FL619AB
NHTSA #11V-573 (School Buses)
NHTSA #11V-576 (Non-School Buses)
Transport Canada #11-417

Subject: FCCC Bus Chassis Grid Heater Relay Wiring

Models Affected: Specific Thomas Built Buses Saf-T-Liner C2 school buses built on Freightliner Custom Chassis B2 chassis and Freightliner Custom Chassis S2 shuttle bus chassis manufactured November 15, 2010, through September 29, 2011, with a certain grid heater mounting bracket.

General Information

Daimler Trucks North America LLC, on behalf of its wholly owned subsidiary, Freightliner Custom Chassis Corporation, has decided that a defect that relates to motor vehicle safety exists on the vehicles mentioned above.

There are approximately 5,700 vehicles involved in this campaign.

The grid heater relay ground wire may contact the relay power terminal and rub or chafe, resulting in a possible short circuit. An electric fault or short circuit could cause a vehicle fire.

The routing of the grid heater relay ground wire will be inspected and modified as needed to ensure adequate clearance from the power terminal.

Additional Repairs

Dealers must complete all outstanding recall and field service campaigns prior to the sale or delivery of a vehicle. A Dealer will be liable for any progressive damage that results from its failure to complete campaigns before sale or delivery of a vehicle.

Owners may be liable for any progressive damage that results from failure to complete campaigns within a reasonable time after receiving notification.

Work Instructions

Please refer to the attached work instructions. Prior to performing the campaign, check the vehicle for a completion sticker (Form WAR260).

Replacement Parts

Replacement parts are not needed for this Recall.

If our records show your dealership has ordered any vehicles involved in campaign number FL619AB, a list of the customers and vehicle identification numbers will be available on AccessFreightliner.com.

Removed Parts

Please follow Warranty Failed Parts Tracking shipping instructions for the disposition of all removed parts.

Labor Allowance

Table 1 - Labor Allowance

Campaign Number	Procedure	Time Allowed (hours)	SRT Code	Damage Code
FL619AB	Inspect grid heater relay ground wire routing	0.2	996-0868A	000-Inspected
	Inspect and reroute grid heater relay ground wire	0.4	996-0868B	000-Modifiedx

Table 1

Recall Campaign

Daimler Trucks
North America LLC

January 2012
FL619AB
NHTSA #11V-573 (School Buses)
NHTSA #11V-576 (Non-School Buses)
Transport Canada #11-417

IMPORTANT: When the recall has been completed, locate the base completion label in the appropriate location on the vehicle, and attach the red completion sticker provided in the recall kit (Form WAR260). If the vehicle does not have a base completion label, clean a spot on the appropriate location of the vehicle and first attach the base completion label (Form WAR259). If a recall kit is not required or there is no completion sticker in the kit, write the recall number on a blank sticker and attach it to the base completion label.

Claims for Credit

You will be reimbursed for your parts, labor, and handling by submitting your claim through the Warranty system within 30 days of completing this campaign. Please reference the following information in QuickClaim:

- Claim type is **Recall**.
- In the FTL Authorization field, enter the campaign number and appropriate condition code (**FL619A, FL619B**).
- In the Primary Failed Part Number field, enter **25-FL619-000**.
- No parts are needed for this Recall.
- In the Labor field, first enter the appropriate SRT from the Labor Allowance Table. For administrative time, enter SRT 939-0010A for 0.3 hours.
- For OWL, the VMRS Component Code is 032-003-013 and the Cause Code is A1- Campaign.
- **Reimbursement for Prior Repairs.** When a customer asks about reimbursement, please do the following.
    - Accept the documentation of the previous repair.
    - Make a brief check of the customer's paperwork to see if the repair may be eligible for reimbursement. (See the "Copy of Owner Letter" section of this bulletin for reimbursement guidelines for this recall.)
    - Submit a Campaign Pre-Approval inquiry to the Warranty Campaigns Department for a decision and authorization number.
    - Include the approved amount on your claim in sublet/outside purchases.
    - In the claim story, first note the authorization number and that the claim includes a reimbursement request.
    - Retain the documentation and provide it to Warranty Campaigns or Claims Processing if requested.
    - When your claim is paid, reimburse the customer the appropriate amount.

IMPORTANT: ServicePro must be viewed prior to performing the recall to ensure the vehicle is involved and the campaign has not been previously completed. Also, check for a completion sticker prior to beginning work.

Contact the Warranty Campaigns Department from 7:00 a.m. to 4:00 p.m. Pacific Time, Monday through Friday, via Web inquiry at AccessFreightliner.com / Support / My Tickets and Submit an Inquiry, or the Customer Assistance Center at (800) 385-4357, after normal business hours, if you have any questions or need additional information.

To return excess kit inventory related to this campaign, U.S. dealers must submit a Parts Authorization Return (PAR) to the Memphis PDC. Canadian dealers must submit a PAR to their facing PDC. All kits must be in resalable condition. PAR requests must include the original purchase invoice number.

The letter notifying vehicle owners is included for your reference.

Daimler Trucks North America LLC

Recall Campaign

January 2012
FL619AB
NHTSA #11V-573 (School Buses)
NHTSA #11V-576 (Non-School Buses)
Transport Canada #11-417

Please note that the National Traffic and Motor Vehicle Safety Act, as amended (Title 49, United States Code, Chapter 301), requires the owner's vehicle(s) be corrected within a reasonable time after parts are available to you. The Act states that failure to repair a vehicle within 60 days after tender for repair shall be prima facie evidence of an unreasonable time. However, circumstances of a particular situation may reduce the 60 day period. Failure to repair a vehicle within a reasonable time can result in either the obligation to (a) replace the vehicle with an identical or reasonably equivalent vehicle, without charge, or (b) refund the purchase price in full, less a reasonable allowance for depreciation. The Act further prohibits dealers from selling a vehicle unless all outstanding recalls are performed. Any lessor is required to send a copy of the recall notification to the lessee within 10 days. Any subsequent stage manufacturer is required to forward this notice to its distributors and retail outlets within five working days.

Recall Campaign

Daimler Trucks
North America LLC

January 2012
FL619AB
NHTSA #11V-573 (School Buses)
NHTSA #11V-576 (Non-School Buses)
Transport Canada #11-417

Copy of Notice to Owners

Subject: FCCC Bus Chassis Grid Heater Relay Wiring

For the Notice to U.S. Customers: This notice is sent to you in accordance with the requirements of the National Traffic and Motor Vehicle Safety Act.

For the Notice to Canadian Customers: This notice is sent to you in accordance with the Canadian Motor Vehicles Safety Act.

Daimler Trucks North America LLC, on behalf of its wholly owned subsidiary, Freightliner Custom Chassis Corporation, has decided that a defect which relates to motor vehicle safety exists on specific Thomas Built Buses Saf-T-Liner C2 school buses built on Freightliner Custom Chassis B2 chassis and Freightliner Custom Chassis S2 shuttle bus chassis manufactured November 15, 2010, through September 29, 2011, with a certain grid heater mounting bracket.

The grid heater relay ground wire may contact the relay power terminal and rub or chafe, resulting in a possible short circuit. An electric fault or short circuit could cause a vehicle fire.

The routing of the grid heater relay ground wire will be inspected and modified as needed to ensure adequate clearance from the power terminal.

Please contact an authorized Daimler Trucks North America dealer to arrange to have the recall performed and to ensure that parts are available at the dealership. To locate an authorized dealer, search online at www.Daimler-TrucksNorthAmerica.com. The Recall will take approximately half an hour to an hour and will be performed at no charge to you.

You may be liable for any progressive damage that results from your failure to complete the Recall within a reasonable time after receiving notification

If you do not own the vehicle that corresponds to the identification number(s) which appears on the Recall Notification, please return the notification to the Warranty Campaigns Department with any information you can furnish that will assist us in locating the present owner. If you have leased this vehicle, Federal law requires that you forward this notice to the lessee within 10 days. If you are a subsequent stage manufacturer, Federal law requires that you forward this notice to your distributors and retail outlets within five working days. If you have paid to have this recall condition corrected prior to this notice, you may be eligible to receive reimbursement. Please see the reverse side of this notice for details.

For the Notice to U.S. Customers: If you have questions about this Recall, please contact the Warranty Campaigns Department at (800) 547-0712, 7:00 a.m. to 4:00 p.m. Pacific Time Monday through Friday, e-mail address DTNA.Warranty.Campaigns@Daimler.com, or the Customer Assistance Center at (800) 385-4357 after normal business hours. If you are not able to have the defect remedied without charge and within a reasonable time, you may wish to submit a complaint to the Administrator, National Highway Traffic Safety Administration, 1200 New Jersey Avenue, SE., Washington, DC 20590; or call the Vehicle Safety Hotline at (888) 327-4236 (TTY: 800-424-9153); or to http://www.safercar.gov.

For the Notice to Canadian Customers: If you have questions about this Recall, please contact the Warranty Campaigns Department at (800) 547-0712, 7:00 a.m. to 4:00 p.m. Pacific Time Monday through Friday, e-mail address DTNA.Warranty.Campaigns@Daimler.com, or the Customer Assistance Center at (800) 385-4357 after normal business hours.

We regret any inconvenience this action may cause but feel certain you understand our interest in motor vehicle safety.

WARRANTY CAMPAIGNS DEPARTMENT

Enclosure

Daimler Trucks North America LLC

Recall Campaign

January 2012
FL619AB
NHTSA #11V-573 (School Buses)
NHTSA #11V-576 (Non-School Buses)
Transport Canada #11-417

Reimbursement to Customers for Repairs Performed Prior to Recall

If you have already **paid** to have this recall condition corrected you may be eligible to receive reimbursement.

Requests for reimbursement may include parts and labor. Reimbursement may be limited to the amount the repair would have cost if completed by an authorized Daimler Trucks North America LLC dealer. The following documentation must be presented to your dealer for consideration for reimbursement.

Please provide original or clear copies of all receipts, invoices, and repair orders that show:

- The name and address of the person who paid for the repair.
- The Vehicle Identification Number (VIN) of the vehicle that was repaired.
- What problem occurred, what repair was done, when the repair was done.
- Who repaired the vehicle.
- The total cost of the repair expense that is being claimed.
- Proof of payment for the repair (such as the front and back of a cancelled check or a credit card receipt).

Reimbursement will be made by check from your Daimler Trucks North America LLC dealer.

Please speak with your Daimler Trucks North America LLC authorized dealer concerning this matter.

Recall Campaign

Daimler Trucks
North America LLC

January 2012
FL619AB
NHTSA #11V-573 (School Buses)
NHTSA #11V-576 (Non-School Buses)
Transport Canada #11-417

Work Instructions

Subject: FCCC Bus Chassis Grid Heater Relay Wiring

Models Affected: Specific Thomas Built Buses Saf-T-Liner C2 school buses built on Freightliner Custom Chassis B2 chassis and Freightliner Custom Chassis S2 shuttle bus chassis manufactured November 15, 2010, through September 29, 2011, with a certain grid heater mounting bracket.

Inspection

1. Check the base label (Form WAR259) for a completion sticker for FL619 (Form WAR260) indicating this work has been done. The base label is usually located above the driver's window in buses. If a sticker for FL619 is present, no work is needed. If no sticker is present, continue with the next step.
2. Park the vehicle on a level surface, shut down the engine, and set the parking brake. Chock the tires.
3. Open the hood.
4. Inspect the wiring on the grid heater relay, located in the top-middle of the firewall. See **Fig. 1**.
   - 4.1 If the ground wire is touching the positive power cable, go to "Ground Wire Routing."
   - 4.2 If the ground wire is not touching the power cable, no further work is needed. Clean a spot on the base label (Form WAR259), write the Recall number, FL619, on a blank completion sticker (Form WAR260), and attach it to the base label.

Ground Wire Routing

1. Split the harness loom open so that the ground wire can be pulled out to the right, directly above the grid heater relay, as shown in **Fig. 2**.
2. Tape the harness loom to the left of where the ground wire comes out of the loom.

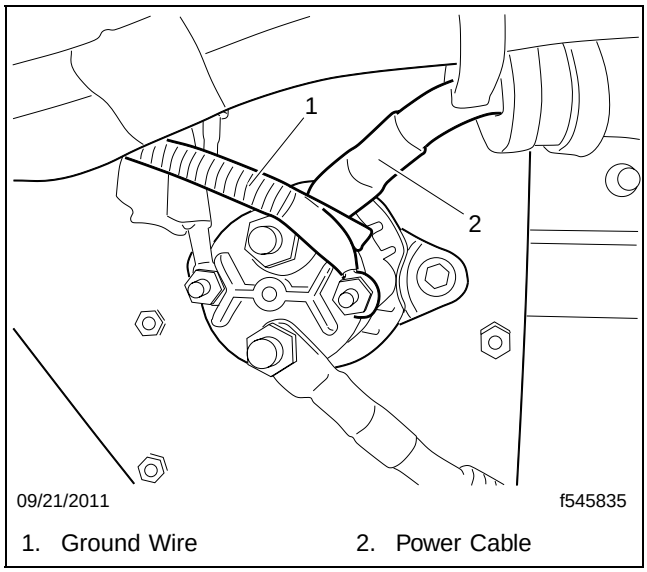

Fig. 1, Ground Wire Touches Power Cable

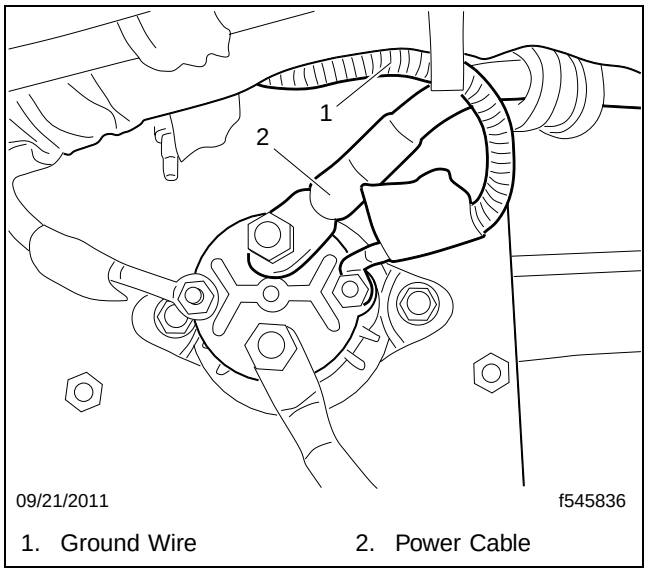

Fig. 2, Ground Wire Routed Above the Grid Heater

3. Route the ground wire as shown in **Fig. 2**.
4. Make certain the loom on the ground wire is still in place, and that the ground wire and the loom are not touching the positive power cable.
5. Lower the hood.
6. Clean a spot on the base label (Form WAR259), write the Recall number, FL619, on a blank completion sticker (Form WAR260), and attach it to the base label.

Unintended Wiper Cycling

Description of Revisions: *This bulletin replaces the version dated June 2007. Part numbers for a new replacement stalk switch are shown in* **Table 1**. *The bulletin title has also been revised.*

General Information

Saf-T-Liner C2 School Buses built prior to July 18th, 2011 may exhibit an unintended cycling of the windshield wipers. If the multifunction turn signal switch part number is A06-36956-000 or A06-36956-002, replace the switch with part number A06-36956-003 and wiring support bracket 06-83353-000.

Procedure

1. Park the vehicle, shut down the engine, set the parking brakes, and chock the tires.
2. Locate the part number on the multifunction turn signal switch. See **Fig. 1**.

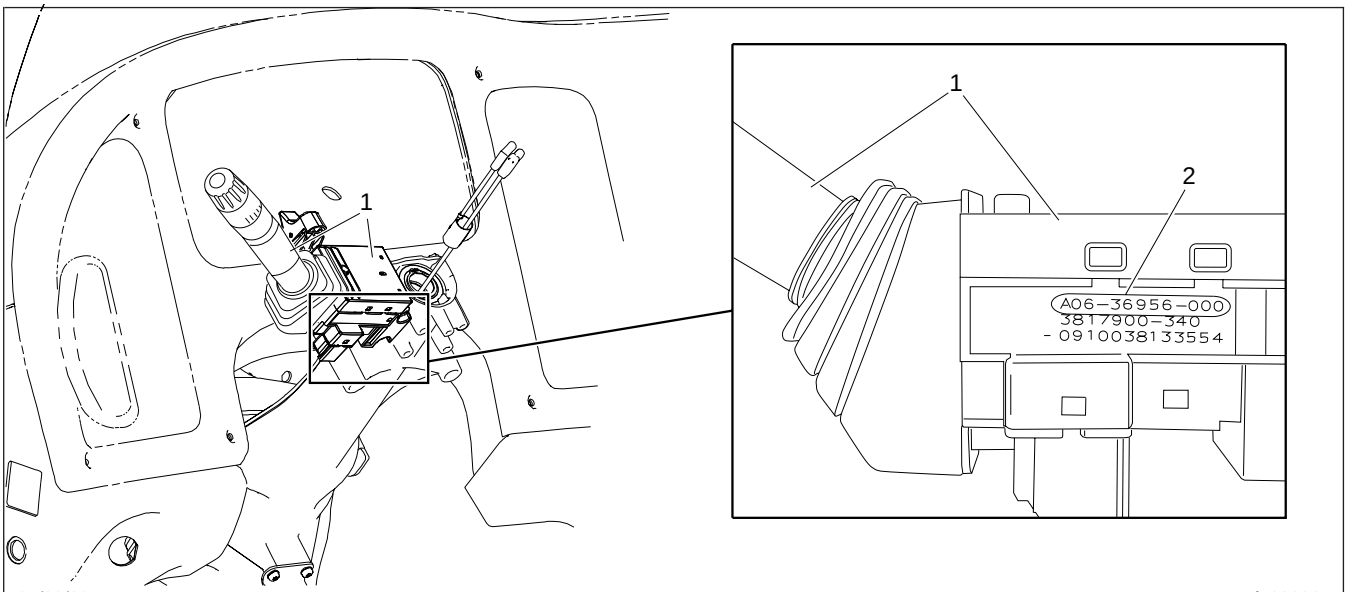

NOTE: The steering wheel is not shown for clarity.

1. Turn Signal Switch
2. Part Number

Fig. 1, Steering Column Clamshell Cover Assembly Removed

2.1 Remove the steering column clamshell cover assembly by removing the four screws that hold it together.

2.2 Check the part number stamped on the lower surface of the switch.

2.3 If the part number is A06-36956-000 or A06-36956-002, go to the next step.

If the part number is A06-36956-003 and the unintended cycling of the windshield wipers is still occurring, go to step 8 to install the wiring support bracket.

If part number A06-36956-003 is installed and the unintended wiper cycling is not occurring, install the steering column clamshell cover assembly. Tighten the fasteners firmly. No further action is necessary.

3. Disconnect the negative leads from the batteries.
4. Remove the capscrews that attach the multifunction turn signal switch to the steering column cover. See **Fig. 2**.

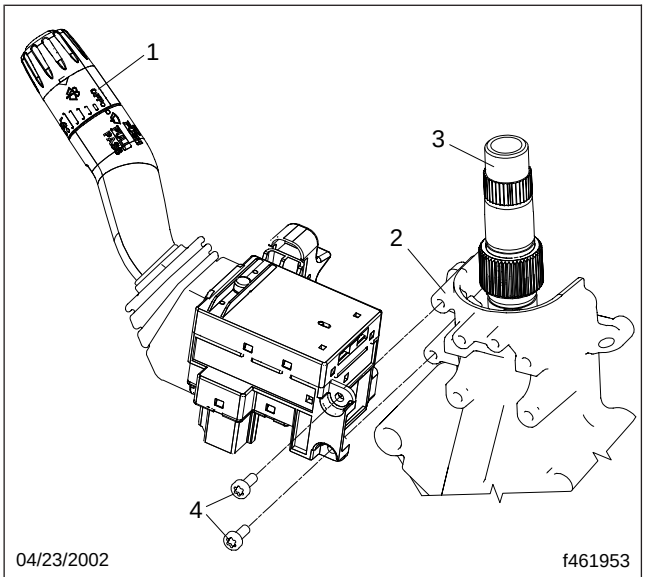

1. Multifunction Turn Signal Switch
2. Steering Column Cover
3. Steering Column
4. 15-mm Long Capscrew

Fig. 2, Multifunction Turn Signal Switch Installation

5. Disconnect the two electrical harness connectors from the multifunction turn signal switch, then remove the switch.
6. Connect the electrical harness connector to the new multifunction turn signal switch (A06-36956-003).

NOTE: The two capscrews used to mount the old turn signal switch can be used to install the new switch.

7. Properly orient the multifunction turn signal switch and use two 15-mm capscrews to attach the switch to the steering column cover. Torque 7 lbf·ft (9 N·m).
8. Install the wiring support bracket (06-83353-000) on the steering column cover. See **Fig. 3**.
   - 8.1 Secure the wiring support bracket to the steering column cover.
   - 8.2 Install the two M6 thread rolling screws (23-12966-715) to attach the wiring support bracket at the unused bosses in the steering column housing, and tighten securely.
9. Secure the multifunction turn signal switch wiring harness to the support bracket with the tie strap (23-13482-001). See **Fig. 4**.
10. Push the rubber boot over the connector.
11. Install the steering column clamshell cover assembly. Tighten the fasteners firmly.
12. Connect the batteries.
13. Remove the chocks from the tires.

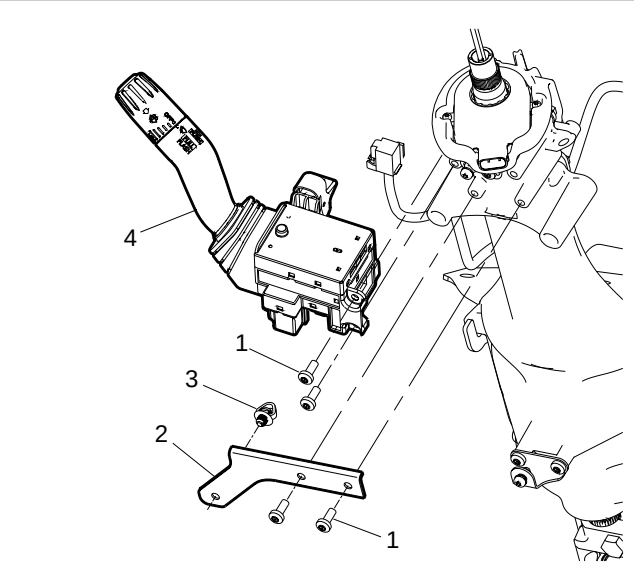

1. Mounting Screws
2. Wiring Support Bracket
3. Tie, Fir Tree
4. Turn Signal Switch

Fig. 3, New Turn Signal Switch Installation

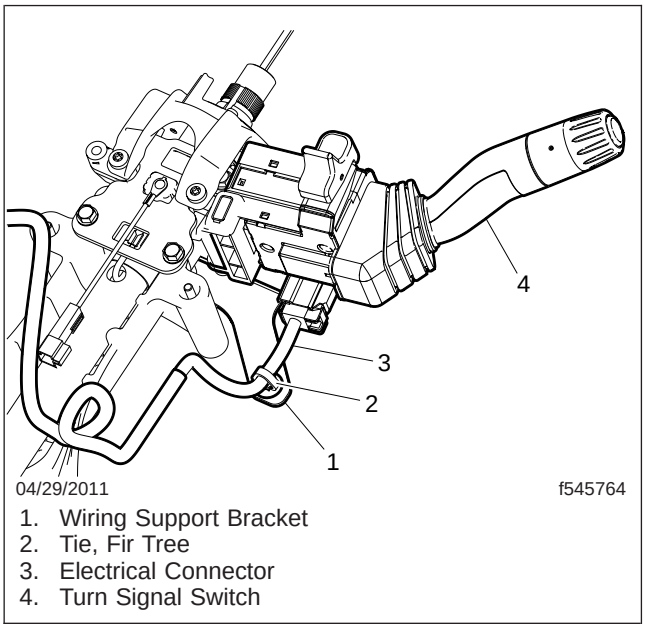

1. Wiring Support Bracket
2. Tie, Fir Tree
3. Electrical Connector
4. Turn Signal Switch

Fig. 4, New Turn Signal Switch Installation (reverse view)

Parts

See **Table 1** for parts required for the stalk switch retrofit.

Parts for Stalk Switch Retrofit		
Part	**Part Number**	**Quantity**
Multifunction Turn Stalk Switch	A06-36956-003	1
Bracket, Wiring Support	06-83353-000	1
Tie, Fir Tree	23-13482-001	1
M6 Screw	23-12966-715	2

Table 1, Parts for Stalk Switch Retrofit

Warranty

This procedure is warrantable only if the described condition exists and the repair is performed within the applicable base or extended coverage warranty period. If a failure is not found, this procedure is considered preventive and warranty does not apply.

Normal warranty applies. See **Table 2** for QuickClaim damage code and labor allowance information. Refer to this service bulletin by number at the beginning of the claim comments. See **Table 3** for OWL VMRS codes and labor allowance information. Enter this service bulletin number in the *Service Bulletin #* field.

QuickClaim Damage Code and Labor Allowance			
Damage Code	**SRT Code**	**Description**	**Time: Hours**
299–000A03315	299–5010A	Assembly, Turn Signal Switch, Replace	0.3
	299–5010B	Bracket, Turn Signal Switch, Replace	0.2

Table 2, QuickClaim Damage Code and Labor Allowance

OWL VMRS Codes and Labor Allowance				
Primary Failed Part	**Cause Code**	**SRT Code**	**Description**	**Time: Hours**
Turn Signal Switch Assembly	33	299–5010A	Assembly, Turn Signal Switch, Replace	0.3
		299–5010B	Bracket, Turn Signal Switch, Replace	0.2

Table 3, OWL VMRS Codes and Labor Allowance

Daimler Trucks North America LLC

Field Service Campaign

April 2011
SF443AB

Subject: FCCC Bus Chassis Poly-V Serpentine Drive Belts

Models Affected: Specific Freightliner Custom Chassis B2 school bus chassis (Thomas Built Bus Saf-T-Liner C2) and S2 shuttle bus chassis with Cummins ISB EPA10 engines manufactured June 10, 2009, through January 7, 2011.

General Information

Daimler Trucks North America LLC, on behalf of its wholly owned subsidiary, Freightliner Custom Chassis Corporation, is initiating Field Service Campaign SF443AB to modify the vehicles mentioned above.

On certain vehicles the poly-V serpentine drive belt may be too long, resulting in possible tensioner problems.

The poly-V serpentine drive belt will be inspected for proper length and replaced if necessary.

There are approximately 3,200 vehicles involved.

Additional Repairs

Dealers must complete all outstanding field service campaigns prior to the sale or delivery of a vehicle. A Dealer will be liable for any progressive damage that results from its failure to complete campaigns before sale or delivery of a vehicle.

Owners may be liable for any progressive damage that results from their failure to complete campaigns within a reasonable time after receiving notification.

Please contact Warranty Campaigns for consideration of additional charges prior to performing the repair.

Work Instructions

Please refer to the attached work instructions. Prior to performing the campaign, check the vehicle for a completion sticker (Form WAR261).

Replacement Parts

Replacement kits are now available and can be obtained by ordering the kit number listed below from your facing Parts Distribution Center.

If our records show your dealership has ordered any vehicle(s) involved in campaign SF443AB, a list of the customers and vehicle identification numbers will be available on AccessFreightliner.com. Please refer to this list when ordering parts for this campaign.

Table 1 - Replacement Parts for SF443AB

Campaign Number	Kit Number	Part Description	Part Number	Qty. per Kit	Suggested Wholesale*
SF443A	25-SF443-000	BELT-FAN DRIVE,8RIB,	01-32241-051	1 ea	$32.68 US $33.33 CAN
		Completion Sticker	WAR261	1ea	
SF443B	25-SF443-001	BELT-8RIB,EPDM-POLY,	01-32241-057	1 ea	$32.68 US $33.33 CAN
		Completion Sticker	WAR261	1 ea	

* Please charge all Direct Warranty Customers the above-listed price for the kit, as they are authorized to perform their own Field Service Campaigns.

Table 1

Field Service Campaign

Daimler Trucks
North America LLC

April 2011
SF443AB

Removed Parts

Please follow Warranty Failed Parts Tracking shipping instructions for the disposition of all removed parts.

Labor Allowance

Table 2 - Labor Allowance

Campaign Number	Procedure	Time Allowed (hours)	SRT Code	Damage Code
SF443AB	Inspect belt part number; no replacement needed	0.1	996-0833A	000-Inspected
	Inspect and replace belt	0.2	996-0833B	000-Modifiedx

Table 2

IMPORTANT: When the campaign has been completed, locate the base completion label in the appropriate location on the vehicle, and attach the gray completion sticker provided in the field service kit (Form WAR261). If the vehicle does not have a base completion label, clean a spot on the appropriate location of the vehicle and first attach the base completion label (Form WAR259). If a field service kit is not required or there is no completion sticker in the kit, write the campaign number on a blank sticker and attach it to the base completion label.

Claims for Credit

You will be reimbursed for your labor, parts, and handling by submitting your claim through the Warranty system within 30 days of completing the campaign. Please reference the following information in QuickClaim:

- Claim type is **Field Service**.
- In the FTL Authorization field, enter the campaign number and appropriate condition code (**SF443A or SF443B**).
- In the Primary Failed Part Number field, enter **25-SF443-000**.
- In the Parts field, enter the appropriate kit number(s) as shown in the Replacement Parts Table.
- In the Labor field, first enter the appropriate SRT from the Labor Allowance Table. For administrative time, enter SRT 939-0010A for 0.3 hours.
- If pulley alignment work is done (see step 5), it will be claimed separately:

  - For OWL dealerships, submit a Warranty PreApproval for the pulley alignment. Include in the comment section the campaign number, FCCC Call Center inquiry number, and name of person providing the authorization.

  - For non OWL dealerships, obtain an FSA number from the FCCC Call Center and file a regular FSA claim.
- For OWL, the VMRS Component Code is 042-003-010.

This Field Service Campaign will **terminate on April 30, 2012**. Dealers will be notified of any changes to the termination date via Important Campaign Information Letter posted on AccessFreightliner.com.

IMPORTANT: ServicePro® must be viewed prior to beginning work to ensure the vehicle is involved and the campaign has not previously been completed. Also, check for a completion sticker before beginning work.

All claims must be submitted within 30 days of the repair and within 30 days of the termination date of the campaign. All excess inventory to be returned to the PDC following the conclusion of the campaign must be returned in resaleable condition to the Memphis PDC within 90 days from the termination date. Please submit a PAR to request return to the Memphis PDC. (Canadian dealers should return the kits to their facing PDC.)

Contact the Warranty Campaigns Department from 7:00 a.m. to 4:00 p.m. Pacific Time, Monday through Friday, via Web inquiry at AccessFreightliner.com / Support / Submit an Inquiry, or the Customer Assistance Center at (800) 385-4357, after normal business hours, if you have any questions or need additional information.

Daimler Trucks
North America LLC

Field Service Campaign

April 2011
SF443AB

Copy of Letter to Owner

Subject: FCCC Bus Chassis Poly-V Serpentine Drive Belts

Daimler Trucks North America LLC, on behalf of its wholly owned subsidiary, Freightliner Custom Chassis Corporation, is initiating Field Service Campaign SF443AB to modify specific Freightliner Custom Chassis B2 school bus chassis (Thomas Built Bus Saf-T-Liner C2) and S2 shuttle bus chassis with Cummins ISB EPA10 engines manufactured June 10, 2009, through January 7, 2011.

On certain vehicles the poly-V serpentine drive belt may be too long, resulting in possible tension problems.

The drive belt will be inspected for proper length and replaced if necessary.

Parts are now available for authorized dealers to order. Contact your authorized Daimler Trucks North America dealer to arrange to have the campaign performed as soon as possible and to ensure that parts are available at the dealership. To locate an authorized dealer, search online at www.Daimler-TrucksNorthAmerica.com or contact the Warranty Campaigns Department for assistance.

When you contact your dealer, refer to Field Service Campaign **SF443AB** and your vehicle identification number. Once kit(s) are received at the dealership, the campaign will take approximately 30 minutes and will be performed at no charge to you.

This Field Service Campaign will **terminate on April 30, 2012**. Please make sure the campaign is completed prior to this date. Work completed after this date will be done at the customer's expense.

As stated in the terms of your express limited warranty, Daimler Trucks North America LLC will not pay for any damage caused by failure to properly maintain your vehicle. Daimler Trucks North America LLC considers the work necessary under this campaign to be proper maintenance and will, therefore, not pay for any damage to your vehicle caused by your failure to have the repairs that are the subject of this campaign performed in a reasonable time.

IMPORTANT: When the campaign has been completed on your vehicle, please ensure that a completion sticker has been affixed to your vehicle referencing **SF443**.

Contact the Warranty Campaigns Department at (800) 547-0712, from 7:00 a.m. to 4:00 p.m. Pacific Time, Monday through Friday, e-mail address DTNA.Warranty.Campaigns@Daimler.com, or the Customer Assistance Center at (800) FTL-HELP, after normal business hours, if you have any questions or need additional information.

WARRANTY CAMPAIGNS DEPARTMENT

Enclosure

Field Service Campaign

Daimler Trucks
North America LLC

April 2011
SF443AB

Work Instructions

Subject: FCCC Bus Chassis Poly-V Serpentine Drive Belts

Models Affected: Specific Freightliner Custom Chassis B2 school bus chassis (Thomas Built Bus Saf-T-Liner C2) and S2 shuttle bus chassis with Cummins ISB EPA10 engines manufactured June 10, 2009, through January 7, 2011.

Belt Inspection and Replacement Procedure

1. Check the base label (Form WAR259) for a completion sticker for SF443 (Form WAR261), indicating this work has been completed. On school busses, the base label is usually located above the driver's window. On shuttle busses, the base label is usually located in the driver's area. If a completion sticker is present, no further work is needed. If a completion sticker is not present, proceed to the next step.
2. Park the vehicle on a level surface, shut down the engine, apply the parking brake, and chock the tires.
3. Disconnect the batteries at the negative terminals.
4. Open the hood and inspect the belt to see if it has already been replaced. Look at the part number painted on the belt. For vehicles in SF443A it should end in -051 and for vehicles in SF443B it should end in -057. If the part number does not end in -051 for SF443A or in -057 for SF443B, replace it.

NOTE: The engine may need to be started momentarily then turned off as many times as necessary to bring the part number on the belt into view.

5. Check the alignment of the pulleys. See **Fig. 1**. If alignment is in question, contact the FCCC Call Center Dealer Line for assistance and authorization number. Any alignment work will be claimed separately. For OWL dealers, obtain the inquiry number and name of person providing the authorization. For non OWL dealers obtain an FSA number.
6. Replace the poly-V serpentine drive belt as follows.

   6.1 Insert a 1/2-inch-drive wrench into the square hole in the belt tensioner, and pull up on the wrench to rotate the tensioner down and away from the belt (clockwise). See **Fig. 2**.

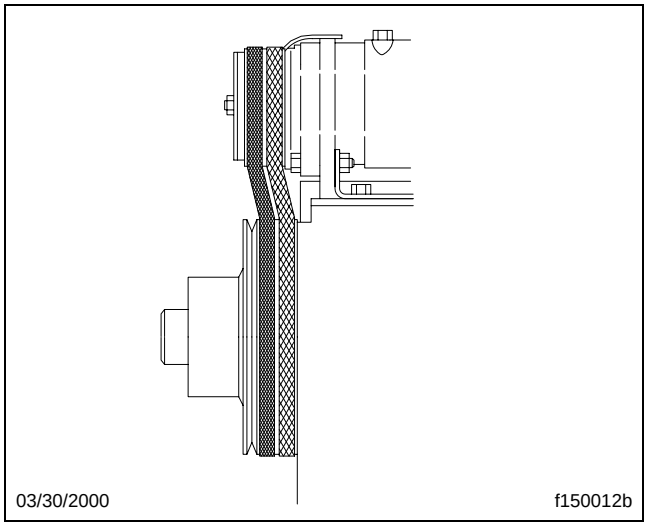

Fig. 1, Typical Pulley Misalignment

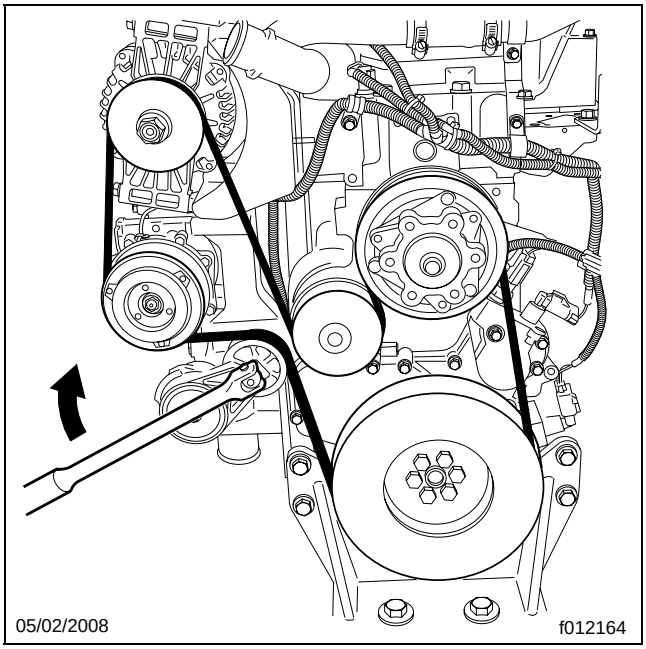

Fig. 2, Releasing the Belt Tensioner

6.2 Remove the existing belt.

6.3 With the belt tensioner swiveled down, fit the new belt onto the various component pulleys. Be careful not to kink, stretch, or otherwise damage the belt. Do not fit the belt onto the tensioner pulley yet.

6.4 Check the drive belt to make sure it is in the correct position and correctly aligned on all the pulleys.

6.5 With the belt correctly in place, lower the wrench to return the tensioning pulley to its original position, allowing the belt tensioner to automatically put the correct tension on the belt; then remove the wrench.

7. Close the hood.
8. Connect the batteries.
9. Clean a spot on the base label (Form WAR259) and attach a grey completion sticker for SF443 (Form WAR261) to indicate the work has been completed.

Daimler Trucks North America LLC

Field Service Campaign

November 2011
SF451AB

Subject: Remy 29MT Starters

Models Affected: Specific Freightliner Business Class M2 vehicles; Freightliner Custom Chassis B2 school bus chassis (Thomas Built Buses Saf-T-Liner C2), S2 shuttle bus chassis, and MC/XC motorhome chassis manufactured February 1, 2011, through March 23, 2011.

General Information

Daimler Trucks North America LLC, on behalf of its Freightliner Trucks Division and its wholly owned subsidiary, Freightliner Custom Chassis Corporation, is initiating Field Service Campaign SF451AB to modify the vehicles mentioned above.

Certain vehicles may have been built with Remy 29MT starters that may contain clutch rolls with improper heat treatments.

The starters will be inspected and replaced if necessary.

There are approximately 450 vehicles involved.

Additional Repairs

Dealers must complete all outstanding field service campaigns prior to the sale or delivery of a vehicle. A Dealer will be liable for any progressive damage that results from its failure to complete campaigns before sale or delivery of a vehicle.

Owners may be liable for any progressive damage that results from their failure to complete campaigns within a reasonable time after receiving notification.

Please contact Warranty Campaigns for consideration of additional charges prior to performing the repair.

Work Instructions

Please refer to the attached work instructions. Prior to performing the campaign, check the vehicle for a completion sticker (Form WAR261).

Replacement Parts

Replacement parts are now available and can be obtained by ordering the kit number listed below from your facing Parts Distribution Center.

If our records show your dealership has ordered any vehicle(s) involved in campaign SF451AB, a list of the customers and vehicle identification numbers will be available on AccessFreightliner.com. Please refer to this list when ordering parts for this campaign.

Table 1 - Replacement Parts for SF451AB

Campaign Number	Kit Number	Part Description	Part Number	Qty. per Kit	Suggested Wholesale*
SF451AB	25-SF451-000	STARTER-DR 12V,29MT+	DR 8200571	1 ea	$426.78 US $422.51 CAN
		Completion Sticker	WAR261	1 ea	

* Please charge all Direct Warranty Customers the above-listed price for the kit, as they are authorized to perform their own Field Service Campaigns.

Table 1

Field Service Campaign

Daimler Trucks
North America LLC

November 2011
SF451AB

Removed Parts

Please follow Warranty Failed Parts Tracking shipping instructions for the disposition of all removed parts.

Labor Allowance

Table 2 - Labor Allowance

Campaign Number	Procedure	Time Allowed (hours)	SRT Code	Damage Code
SF451AB	Inspect 29MT Starter	0.2	996-0850A	000-Inspected
SF451AB	Inspect and Replace 29MT Starter	1.4 M2 Only	996-0850B	000-Modifiedx
		0.9 All other vehicles		

Table 2

IMPORTANT: When the campaign has been completed, locate the base completion label in the appropriate location on the vehicle, and attach the gray completion sticker provided in the field service kit (Form WAR261). If the vehicle does not have a base completion label, clean a spot on the appropriate location of the vehicle and first attach the base completion label (Form WAR259). If a field service kit is not required or there is no completion sticker in the kit, write the campaign number on a blank sticker and attach it to the base completion label.

Claims for Credit

You will be reimbursed for your labor, parts, and handling by submitting your claim through the Warranty system within 30 days of completing the campaign. Please reference the following information in QuickClaim:

- Claim type is **Field Service**.
- In the FTL Authorization field, enter the campaign number and appropriate condition code (**SF451A or SF451B**).
- In the Primary Failed Part Number field, enter **25-SF451-000**.
- In the Parts field, enter the appropriate kit number(s) as shown in the Replacement Parts Table.
- In the Labor field, first enter the appropriate SRT from the Labor Allowance Table. For administrative time, enter SRT 939-0010A for 0.4 hours for RVs or 0.3 hours for all other vehicles.
- For OWL, the VMRS Component Code is 032-002-001.

This Field Service Campaign will **terminate on November 30, 2012**. Dealers will be notified of any changes to the termination date via Important Campaign Information Letter posted on AccessFreightliner.com.

IMPORTANT: ServicePro® must be viewed prior to beginning work to ensure the vehicle is involved and the campaign has not previously been completed. Also, check for a completion sticker before beginning work.

All claims must be submitted within 30 days of the repair and within 30 days of the termination date of the campaign. All excess inventory to be returned to the PDC following the conclusion of the campaign must be returned in resaleable condition to the Memphis PDC within 90 days from the termination date. Please submit a PAR to request return to the Memphis PDC. (Canadian dealers should return the kits to their facing PDC.)

Contact the Warranty Campaigns Department from 7:00 a.m. to 4:00 p.m. Pacific Time, Monday through Friday, via Web inquiry at AccessFreightliner.com / Support / Submit an Inquiry, or the Customer Assistance Center at (800) 385-4357, after normal business hours, if you have any questions or need additional information.

Daimler Trucks North America LLC

Field Service Campaign

November 2011
SF451AB

Copy of Letter to Owner

Subject: Remy 29MT Starters

Daimler Trucks North America LLC, on behalf of its Freightliner Trucks Division and its wholly owned subsidiary, Freightliner Custom Chassis Corporation, is initiating Field Service Campaign SF451AB to modify specific Freightliner Business Class M2 vehicles; Freightliner Custom Chassis B2 school bus chassis (Thomas Built Buses Saf-T-Liner C2), S2 shuttle bus chassis, and MC/XC motorhome chassis manufactured February 1, 2011, through March 23, 2011.

Certain vehicles may have been built with 29MT starters that may contain clutch rolls with improper heat treatments.

The starters will be inspected and replaced if necessary.

Please contact an authorized Daimler Trucks North America dealer to arrange to have the campaign performed and to ensure that parts are available at the dealership. To locate an authorized dealer, search online at www.Daimler-TrucksNorthAmerica.com. The campaign may take up to an hour and a half and will be performed at no charge to you.

This Field Service Campaign will **terminate on November 30, 2012**. Please make sure the campaign is completed prior to this date. Work completed after this date will be done at the customer's expense.

As stated in the terms of your express limited warranty, Daimler Trucks North America LLC will not pay for any damage caused by failure to properly maintain your vehicle. Daimler Trucks North America LLC considers the work necessary under this campaign to be proper maintenance and will, therefore, not pay for any damage to your vehicle caused by your failure to have the repairs that are the subject of this campaign performed in a reasonable time.

IMPORTANT: When the campaign has been completed on your vehicle, please ensure that a completion sticker has been affixed to your vehicle referencing **SF451AB**.

Contact the Warranty Campaigns Department at (800) 547-0712, from 7:00 a.m. to 4:00 p.m. Pacific Time, Monday through Friday, e-mail address DTNA.Warranty.Campaigns@Daimler.com, or the Customer Assistance Center at (800) FTL-HELP, after normal business hours, if you have any questions or need additional information.

WARRANTY CAMPAIGNS DEPARTMENT

Enclosure

Field Service Campaign

Daimler Trucks
North America LLC

November 2011
SF451AB

Work Instructions

Subject: Remy 29MT Starters

Specific Freightliner Business Class M2 vehicles; Freightliner Custom Chassis B2 school bus chassis (Thomas Built Buses Saf-T-Liner C2), S2 shuttle bus chassis, and MC/XC motorhome chassis manufactured February 1, 2011, through March 23, 2011.

Starter Inspection and Replacement Procedure

1. Check the base label (Form WAR259) for a completion sticker for SF451 (Form WAR261) indicating this work has been done. On trucks, the base label is usually located on the passenger-side door, about 12 inches (30 cm) below the door latch. On school buses and shuttle buses, the base label is usually located over the driver's window. On motorhomes, the base label is usually located on the front wall, under the dash. If a completion sticker is present, no further work is needed. If there is no completion sticker, go to the next step.
2. Park the vehicle on a level surface, shut down the engine, and set the parking brake. Chock the tires.
3. Access the engine, and locate the Delco Remy label attached to the starter. It may be necessary to inspect the starter from underneath the engine to see the label.
4. Inspect the date code on the label, located in the area shown in **Fig 1**, to determine if the starter requires replacement. The date codes of starters that must be replaced are within the range of 09FE11 (9 February 2011) through 18MR11 (18 March 2011). If the starter label is missing or unreadable, replace the starter.
5. If the starter date code does not fall within the affected range, no further action is necessary. Clean a spot on the base label (Form WAR259). Write campaign number SF451 on a blank, gray completion sticker (Form WAR261) and attach it to the base label.
6. If the starter date code falls within the affected range, or is missing or unreadable, replace the starter.
   - 6.1 Disconnect the negative battery cables at the batteries, and open the hood.
   - 6.2 Disconnect and label the wiring that connects to the starter. See **Fig. 2**.
   - 6.3 Support the starter, then remove the mounting bolts that attach it to the flywheel housing.
   - 6.4 Place a new starter into the mounting hole in the flywheel housing, then hand tighten the three mounting bolts until finger tight.

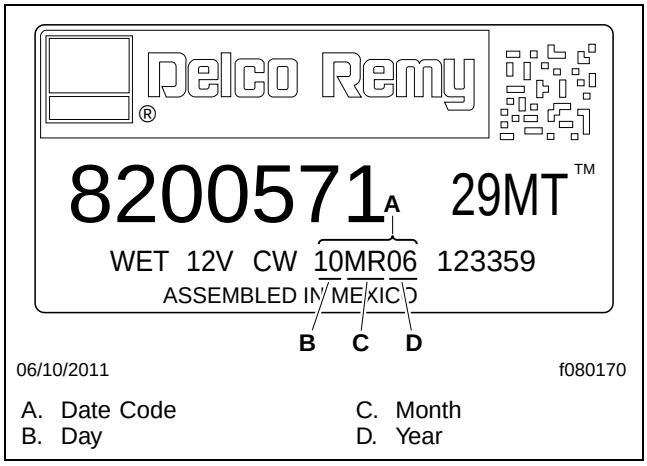

Fig. 1, Starter Label

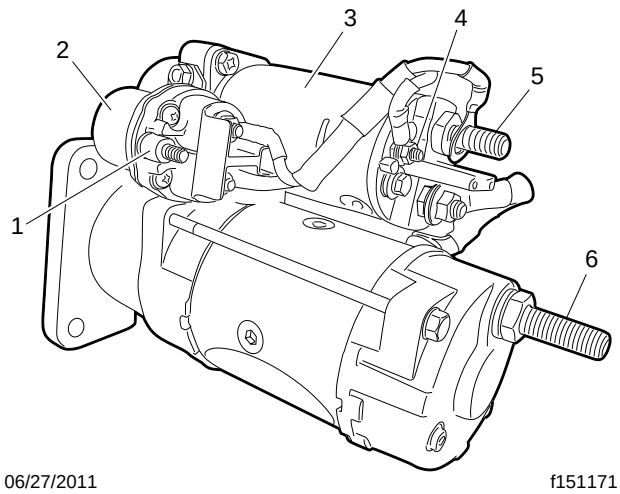

1. Magnetic Switch (+) Terminal
2. Magnetic Switch
3. Solenoid
4. Solenoid Switch (+) Terminal
5. Solenoid Battery (+) Terminal
6. Starter Ground (–) Terminal

Fig. 2, Delco Remy 29MT Starter Terminals

6.5 Using a torque wrench, tighten the mounting bolts to the values shown in **Table 3**.

Torque Values, Starter-Motor to Flywheel-Housing Bolts		
Fastener Description	**Size**	**Torque Value: lbf·ft (N·m)**
Detroit Diesel (steel housing)	5/8–16	137–147 (186–199)
Detroit Diesel (aluminum housing)	5/8–16	85–95 (115–129)
Cummins (steel or aluminum housing)	5/8–16	130–170 (176–230)

Table 3, Torque Values, Starter-Motor to Flywheel-Housing Bolts

6.6 Connect the wiring to the solenoid and starter as previously marked. Tighten the terminals to the torque values shown in **Table 4**, then protect the terminal connectors with dielectric red enamel.

Torque Values, Delco Remy Starter Connections			
Starter	**Terminal**		
	Solenoid Switch (+)	**Solenoid Battery (+)**	**Starter Ground (–)**
29MT	18 to 20 lbf·in (200 to 225 N·cm)	10 to 13 lbf·ft (14.7 to 17.7 N·m)	10 to 13 lbf·ft (14.7 to 17.7 N·m)

Table 4, Torque Values, Delco Remy 29MT Starter Connections

6.7 Connect the batteries.

7. Clean a spot on the base label (Form WAR259) and attach a completion sticker for SF451 (Form WAR261) to the base label.

Daimler Trucks
North America LLC

Field Service Campaign

October 2011
SF453A-D

Subject: Hybrid Cooling System Updates and Check Lamps

Models Affected: Specific Freightliner Business Class M2 Hybrid vehicles and Freightliner Custom Chassis B2 Hybrid school bus chassis (Thomas Built Bus Saf-T-Liner C2 school buses) manufactured December 5, 2007, through July 21, 2011.

General Information

Daimler Trucks North America LLC, on behalf of its Freightliner Trucks Division and its wholly owned subsidiary, Freightliner Custom Chassis Corporation, is initiating Field Service Campaign SF453A-D to modify the vehicles mentioned above.

Certain hybrid electric vehicles may require updates to the radiator, the coolant pump fuse, and the instrument display panel.

Depending on the repairs required for each vehicle, the radiator will be inspected and replaced if necessary, a radiator support bracket installed, the coolant pump fuse and display check lamp replaced.

There are approximately 700 vehicles involved.

Additional Repairs

Dealers must complete all outstanding field service campaigns prior to the sale or delivery of a vehicle. A Dealer will be liable for any progressive damage that results from its failure to complete campaigns before sale or delivery of a vehicle.

Owners may be liable for any progressive damage that results from failure to complete campaigns within a reasonable time after receiving notification.

Please contact Warranty Campaigns for consideration of additional charges prior to performing the repair.

Work Instructions

Please refer to the attached work instructions. Prior to performing the campaign, check the vehicle for a completion sticker (Form WAR261).

Replacement Parts

Replacement parts are now available and can be obtained by ordering the kit number listed below from your facing Parts Distribution Center.

If our records show your dealership has ordered any vehicle(s) involved in campaign SF453A-D, a list of the customers and vehicle identification numbers will be available on AccessFreightliner.com. Please refer to this list when ordering parts for this campaign.

Field Service Campaign

Daimler Trucks
North America LLC

October 2011
SF453A-D

Table 1 - Replacement Parts for SF453A-D

Campaign Number	Kit Number	Part Description	Part Number	Qty. per Kit	Suggested Wholesale*
SF453A	25-SF453-000	CORE-HEAT EXCHANGER	TDC 20481	1 ea	$934.77 US $925.42 CAN
		BRACKET-COOLER SUPPORT	05-30590-000	1 ea	
		DISPLAY-ELECTRONIC HYBRID	FUL 559380	1 ea	
		FUSE-MINI, 25AMP	23-12537-025	1 ea	
		Completion Sticker	WAR261	1 ea	
SF453B	25-SF453-001	BRACKET-COOLER SUPPORT	05-30590-000	1 ea	$283.34 US $280.51 CAN
		DISPLAY-ELECTRONIC HYBRID	FUL 559380	1 ea	
		FUSE-MINI, 25AMP	23-12537-025	1 ea	
		Completion Sticker	WAR261	1 ea	
SF453C	25-SF453-002	DISPLAY-ELECTRONIC HYBRID	FUL 559380	1 ea	$305.79 US $302.73 CAN
		Completion Sticker	WAR261	1 ea	
SF453D (Note: This kit comes with two brackets, but only one is used)	25-SF453-003	BRACKET-COOLER SUPPORT	05-30590-000	2 ea	$168.31 US $166.63 CAN
		Completion Sticker	WAR261	1 ea	

* Please charge all Direct Warranty Customers the above-listed price for the kit, as they are authorized to perform their own Field Service Campaigns.

Table 1

Removed Parts

Please follow Warranty Failed Parts Tracking shipping instructions for the disposition of all removed parts.

Labor Allowance

Table 2 - Labor Allowance

Campaign Number	Procedure	Time Allowed (hours)	SRT Code	Damage Code
SF453A	Inspect & replace radiator; install bracket; replace check lamp & fuse	1.3	996-0854A	000-Modifiedx
	Inspect radiator; install bracket; replace check lamp & fuse	0.6	996-0854B	000-Modifiedx
SF453B	Install bracket; replace check lamp & fuse	0.6	996-0854B	000-Modifiedx
SF453C	Replace check lamp	0.2	996-0854C	000-Modifiedx
SF453D	Install support bracket	0.4	996-0854D	000-Modifiedx

Table 2

IMPORTANT: When the campaign has been completed, locate the base completion label in the appropriate location on the vehicle, and attach the gray completion sticker provided in the field service kit (Form WAR261). If the vehicle does not have a base completion label, clean a spot on the appropriate location of the vehicle and first attach the base completion label (Form WAR259). If a field service kit is not required or there is no completion sticker in the kit, write the campaign number on a blank sticker and attach it to the base completion label.

Claims for Credit

You will be reimbursed for your labor, parts, and handling by submitting your claim through the Warranty system within 30 days of completing the campaign. Please reference the following information in QuickClaim:

- Claim type is **Field Service**.
- In the FTL Authorization field, enter the campaign number and appropriate condition code (e.g. **SF453A, SF453B, etc.**).
- In the Primary Failed Part Number field, enter **25-SF453-000**.
- In the Parts field, enter the appropriate kit number(s) as shown in the Replacement Parts Table. Up to $10.00 may be claimed to top off the coolant.

  In Legacy: List the needed coolant amount in the Parts section of the claim as "ZZ Coolant."
- **In OWL:** List the needed coolant amount in the Other Charges section of the claim as Expense Type "Other" and Description "Coolant."
- In the Labor field, first enter the appropriate SRT from the Labor Allowance Table. For administrative time, enter SRT 939-0010A for 0.3 hours.
- For OWL, the VMRS Component Code is 048-001-037.

This Field Service Campaign will **terminate on October 31, 2012**. Dealers will be notified of any changes to the termination date via Important Campaign Information Letter posted on AccessFreightliner.com.

IMPORTANT: ServicePro® must be viewed prior to beginning work to ensure the vehicle is involved and the campaign has not previously been completed. Also, check for a completion sticker before beginning work.

All claims must be submitted within 30 days of the repair and within 30 days of the termination date of the campaign. All excess inventory to be returned to the PDC following the conclusion of the campaign must be returned in resaleable condition to the Memphis PDC within 90 days from the termination date. Please submit a PAR to request return to the Memphis PDC. (Canadian dealers should return the kits to their facing PDC.)

Contact the Warranty Campaigns Department from 7:00 a.m. to 4:00 p.m. Pacific Time, Monday through Friday, via Web inquiry at AccessFreightliner.com / Support / Submit an Inquiry, or the Customer Assistance Center at (800) 385-4357, after normal business hours, if you have any questions or need additional information.

Field Service Campaign

Daimler Trucks
North America LLC

October 2011
SF453A-D

Copy of Notice to Owners

Subject: Hybrid Cooling System Updates and Check Lamp

Daimler Trucks North America LLC, on behalf of its Freightliner Trucks Division and its wholly owned subsidiary, Freightliner Custom Chassis Corporation, is initiating Field Service Campaign SF453A-D to modify specific Freightliner Business Class M2 Hybrid vehicles and Freightliner Custom Chassis B2 Hybrid school bus chassis (Thomas Built Bus Saf-T-Liner C2 school buses) manufactured December 5, 2007, through July 21, 2011.

Certain hybrid electric vehicles may require updates to the radiator, the coolant pump fuse, and the instrument display panel.

Depending on the repairs required for each vehicle, the radiator will be inspected and replaced if necessary, a radiator support bracket installed, the coolant pump fuse and display check lamp replaced.

Please contact an authorized Daimler Trucks North America dealer to arrange to have the campaign performed and to ensure that parts are available at the dealership. To locate an authorized dealer, search online at www.Daimler-TrucksNorthAmerica.com. The campaign will take approximately 30 to 90 minutes depending on the repair required for your vehicle and will be performed at no charge to you.

This Field Service Campaign will **terminate on October 31, 2012**. Please make sure the campaign is completed prior to this date. Work completed after this date will be done at the customer's expense.

As stated in the terms of your express limited warranty, Daimler Trucks North America LLC will not pay for any damage caused by failure to properly maintain your vehicle. Daimler Trucks North America LLC considers the work necessary under this campaign to be proper maintenance and will, therefore, not pay for any damage to your vehicle caused by your failure to have the repairs that are the subject of this campaign performed in a reasonable time.

IMPORTANT: When the campaign has been completed on your vehicle, please ensure that a completion sticker has been affixed to your vehicle referencing **SF453**.

Contact the Warranty Campaigns Department at (800) 547-0712, from 7:00 a.m. to 4:00 p.m. Pacific Time, Monday through Friday, e-mail address DTNA.Warranty.Campaigns@Daimler.com, or the Customer Assistance Center at (800) FTL-HELP, after normal business hours, if you have any questions or need additional information.

WARRANTY CAMPAIGNS DEPARTMENT

Enclosure

Work Instructions

Subject: Hybrid Cooling System Updates and Check Lamp

Models Affected: Specific Freightliner Business Class M2 Hybrid vehicles and Freightliner Custom Chassis B2 Hybrid school bus chassis (Thomas Built Bus Saf-T-Liner C2 school buses) manufactured December 5, 2007, through July 21, 2011.

Preliminary Procedures

1. Check the base label (Form WAR259) for a completion sticker for SF453 (Form WAR261). The base label is usually located on the passenger-side door, about 12 inches (30 cm) below the door latch. If a completion sticker is present, no further work is needed. If a completion sticker is not present, proceed to the next step.
2. Park the vehicle on a level surface, shut down the engine, and set the parking brake. Chock the tires.
3. Go to the appropriate section of the work instructions for the vehicle:
   - SF453A - this page - Radiator, Support Bracket, Coolant Pump Fuse, & Check Lamp Assembly
   - SF453B - page 8 - Support Bracket, Coolant Pump Fuse, & Check Lamp Assembly
   - SF453C - page 8 - Check Lamp Assembly Only
   - SF453D - page 8 - Support Bracket Only

SF453A: Radiator, Support Bracket, Coolant Pump Fuse & Check Lamp Assy

1. Check the forward end tank of the radiator for a green indicator dot. It is visible from under the driver's side fuel tank; see **Fig. 1**.

   If the green dot is present, the radiator does not need to be replaced. Go to step 1 of the SF453B section and finish the repair with the SF453B instructions. Use SRT 996-0854B when filing your claim.

   If there is no green dot, continue with the following steps to replace the radiator with a newer one that has additional welds between the core support braces and the end tanks (see **Fig. 2**).
2. Disconnect the 12V batteries.
3. Raise the front of the truck, and place it on jack stands.
4. Loosen, but do not remove the top two bolts on the existing front cooler bracket. See **Fig. 3**.
5. Remove the lower radiator hose and drain the system. Drain into a clean container for reuse.
6. Remove the remaining hoses.
7. Remove the four bolts that attach the radiator to the brackets, and remove the assembly.
8. Remove the fan/shroud assembly from the original radiator and install it on the new one.
9. Install the radiator and new support bracket, as follows.

   9.1 Set the radiator assembly in position and install the rear radiator mounting bolts finger-tight.

   9.2 Install the front radiator mounting bolts, leaving a gap large enough for the new support bracket to be installed.

   9.3 Place the new bracket as shown in **Fig. 4**.

   IMPORTANT: Tighten the top bracket bolts carefully to avoid damaging any air and electrical lines routed in the channel of the frame rail.

   9.4 Tighten the top bracket flange screws 21 lbf·ft (28 N·m).

   9.5 Tighten the radiator mounting flange screws 11 lbf·ft (15 N·m).

Field Service Campaign

Daimler Trucks
North America LLC

October 2011
SF453A-D

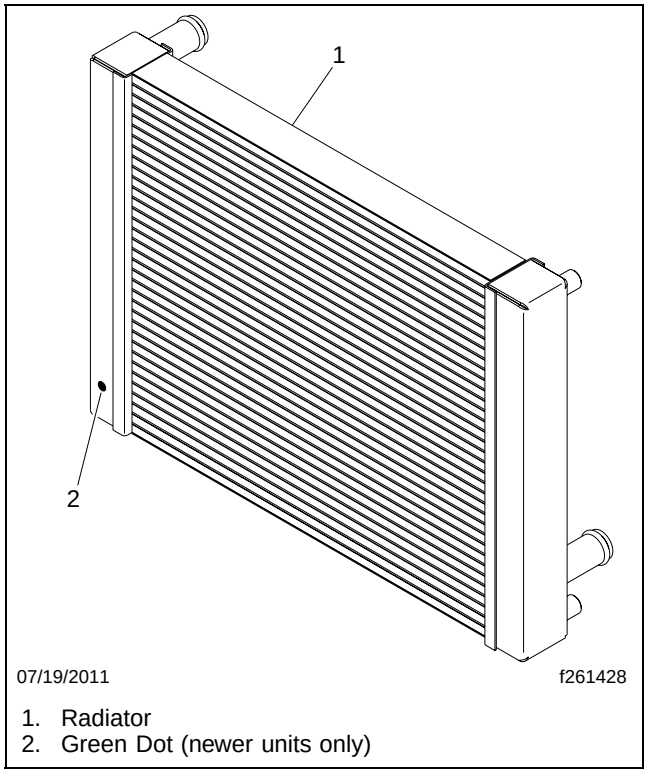

1. Radiator
2. Green Dot (newer units only)

Fig. 1, New Radiator

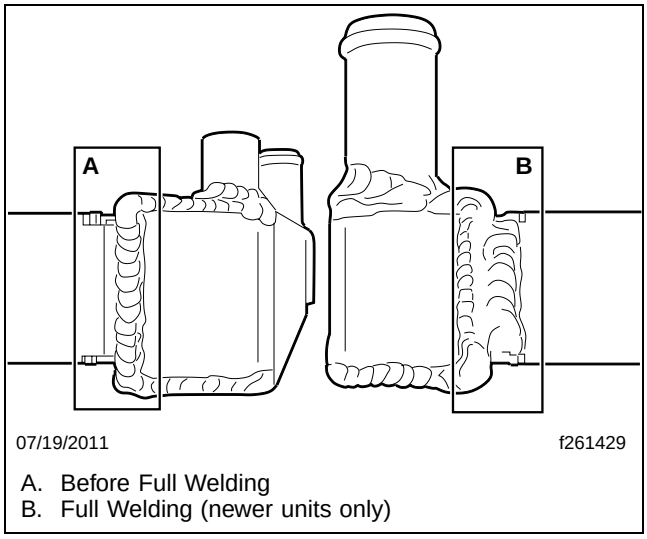

A. Before Full Welding
B. Full Welding (newer units only)

Fig. 2, End Tank Welds

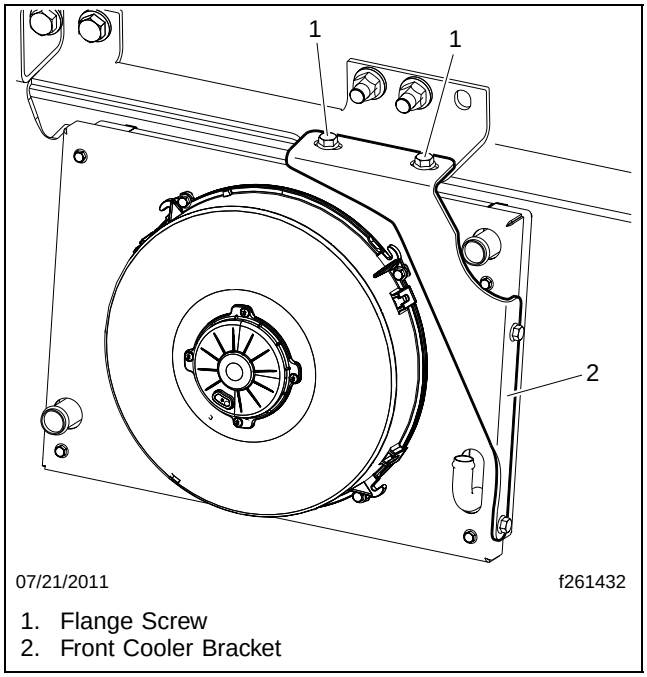

1. Flange Screw
2. Front Cooler Bracket

Fig. 3, Front Cooler Bracket and Flange Screws

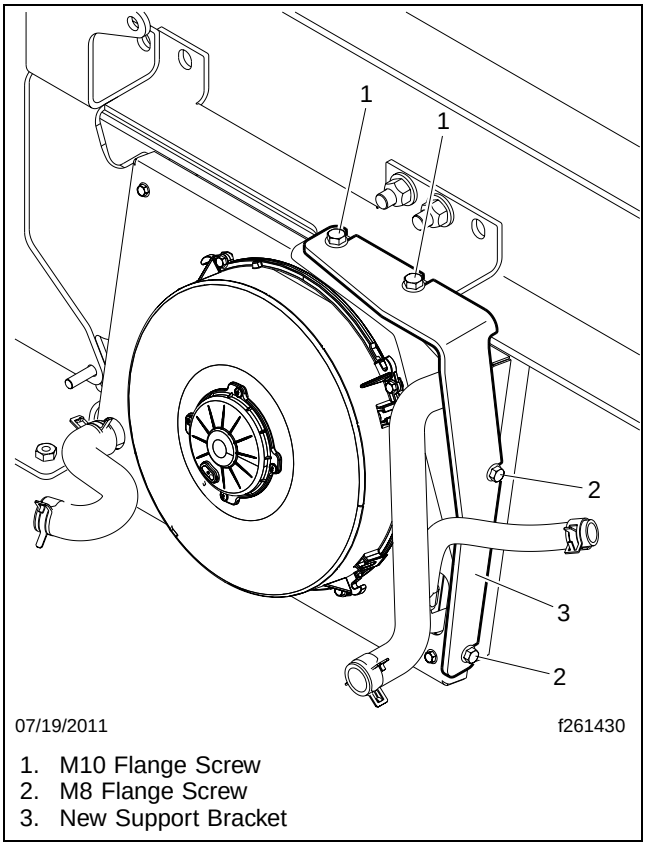

1. M10 Flange Screw
2. M8 Flange Screw
3. New Support Bracket

Fig. 4, New Support Bracket Installation

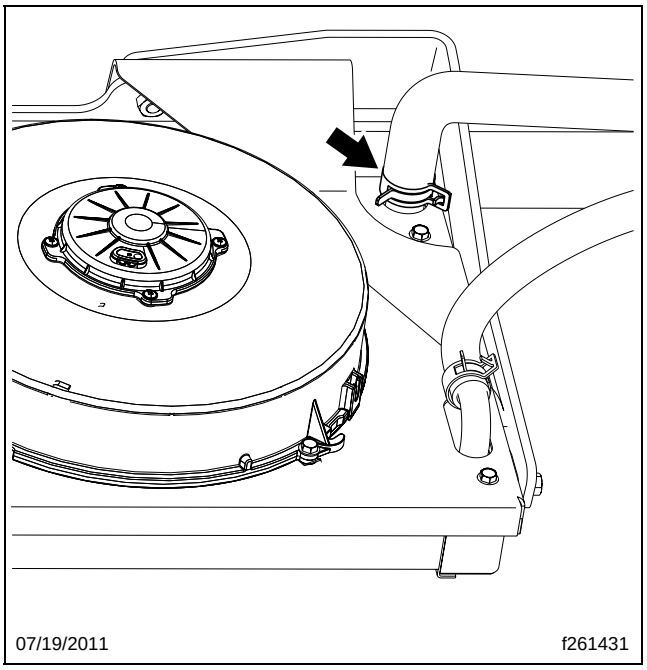

Fig. 5, Radiator Hose Clamp, Properly Oriented

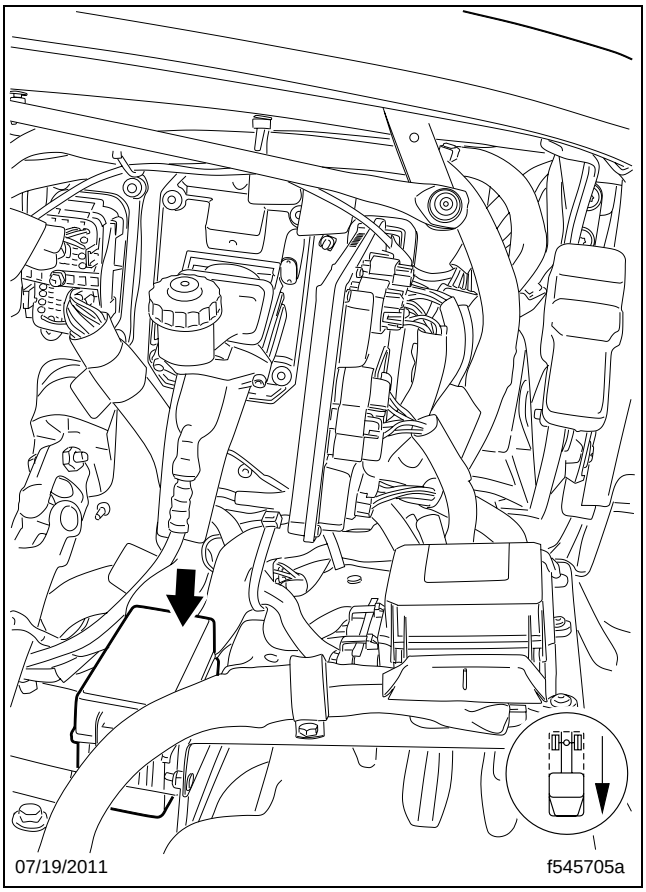

Fig. 6, Powertrain PDM

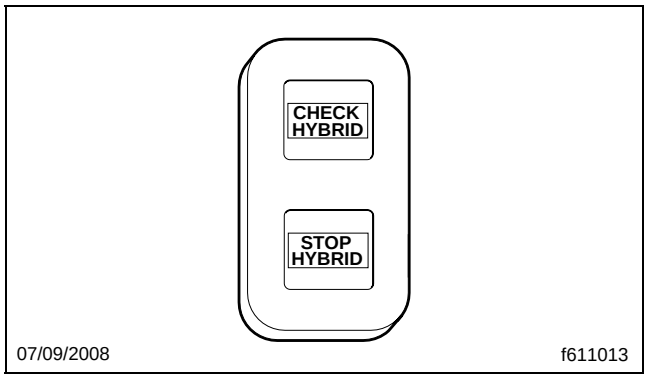

Fig. 7, HEV Check Lamps

10. Connect the coolant hoses.
11. Connect the batteries.
12. Fill and bleed the HEV cooling system, as follows.
    - 12.1 Fill the reservoir with the saved coolant.
    - 12.2 Start the engine, and continue to fill the reservoir to the "MAX" mark, as required.
13. At the powertrain PDM (**Fig. 6**), check the coolant pump fuse at position F4. If the size of the fuse does not match the rating indicated on the PDM cover, replace it with the correct one from the kit.
14. Install the new HEV system check lamp assembly from the kit.
    - 14.1 Remove the dash panel cover and center dash panel.
    - 14.2 Replace the warning light with the new one included in the kit. See **Fig. 7**
15. Clean a spot on the base label (Form WAR259) and attach a grey completion sticker for SF453 (Form WAR261) to indicate the work has been completed.

SF453B: Support Bracket, Coolant Pump Fuse, & Check Lamp Assembly

1. Disconnect the 12V batteries.
2. Loosen, but do not remove the top two bolts on the existing front cooler bracket. See **Fig. 3**.
3. Loosen the front two radiator mounting bolts.
4. Orient the upper radiator hose clamp so that the release tabs point down. See **Fig. 5**. This will prevent rubbing issues and allow the hose clamp to be removed without removing the radiator bracket.
5. Place the new bracket as shown in **Fig. 4**.

IMPORTANT: Tighten the top bracket bolts carefully to avoid damaging any air and electrical lines routed in the channel of the frame rail.

6. Tighten the top bracket flange screws 21 lbf·ft (28 N·m).
7. Tighten the radiator mounting flange screws 11 lbf·ft (15 N·m).
8. Connect the batteries.
9. At the powertrain PDM (**Fig. 6**), check the coolant pump fuse at position F4. If the size of the fuse does not match the rating indicated on the PDM cover, replace it with the correct one from the kit
10. Install the new HEV system check lamp assembly from the kit.
    - 10.1 Remove the dash panel cover and center dash panel.
    - 10.2 Replace the warning light with the new one included in the kit. See **Fig. 7**
11. Clean a spot on the base label (Form WAR259) and attach a grey completion sticker for SF453 (Form WAR261) to indicate the work has been completed.

SF453C: Replace Check Lamp Assembly Only

1. Remove the dash panel cover and center dash panel.
2. Replace the warning light with the new one included in the kit. See **Fig. 7**
3. Clean a spot on the base label (Form WAR259) and attach a grey completion sticker for SF453 (Form WAR261) to indicate the work has been completed.

SF453D: Install Support Bracket Only

1. Disconnect the 12V batteries.
2. Loosen, but do not remove the top two bolts on the existing front cooler bracket. See **Fig. 3**.
3. Loosen the front two radiator mounting bolts.
4. Orient the upper radiator hose clamp so that the release tabs point down. See **Fig. 5**. This will prevent rubbing issues and allow the hose clamp to be removed without removing the radiator bracket.
5. Place the new bracket as shown in **Fig. 4**. (Note: Kit 25-SF431-003 comes with two brackets, but only one is used for the repair.)

IMPORTANT: Tighten the top bracket bolts carefully to avoid damaging any air and electrical lines routed in the channel of the frame rail.

6. Tighten the top bracket flange screws 21 lbf·ft (28 N·m).
7. Tighten the radiator mounting flange screws 11 lbf·ft (15 N·m).
8. Connect the batteries.
9. Clean a spot on the base label (Form WAR259) and attach a grey completion sticker for SF453 (Form WAR261) to indicate the work has been completed.

BLUE BIRD

R08NC

DATE: **SEPTEMBER 18, 2008**

TO: **U.S. DEALERS**

SUBJECT: **RECALL R08NC** **FMVSS 221 SCHOOL BUS BODY JOINT STRENGTH NONCOMPLIANCE-INCORRECT RIVET PATTERN IN REAR ROOF CAP**

This notice is sent to you in accordance with the requirements of The National Traffic and Motor Vehicle Safety Act.

Blue Bird Body Company has decided that certain 2004 through 2009 model year Blue Bird All American and conventional school buses manufactured from March 06, 2003 through March 28, 2008 fail to conform to the National Motor Vehicle Safety Standard No. 221, (School Bus Body Joint Strength).

On the subject buses, the rivet pattern may be incorrect in sections of the rear roof sheet joint that attaches it to the rear roof cap. In the event of a crash, these panels may separate exposing the occupants to increased risk of injury. Blue Bird is conducting a recall to correct this noncompliance. Buses with the noncompliance must be corrected according to the instructions provided with recall R08NC, copy attached.

If our records indicate affected units were delivered in your service area, a printout identifying affected units is enclosed. Dealers should verify correct owners and that complete shipping addresses are provided for each listed vehicle. If you have in your possession or have sold a vehicle that was purchased from another dealer that may be affected by this recall, please notify me at 478-822-2242.

Dealers needing parts to correct this condition will need to inspect the rivet pattern using the enclosed template. Enter the number of rivets required, indicate your roof color and date of inspection on the enclosed inspection sheet and fax to Blue Bird Recall Administration at 478-822-2467 or email to bill.coleman@blue-bird.com. Rivets and sealer will be shipped at no charge via UPS.

If no rivets are found missing, indicate on the inspection reply sheet and return to Blue Bird.

BLUE BIRD CORPORATION
402 Blue Bird Blvd. PO Box 937 • Fort Valley, Georgia 31030
(478) 825-2021

Labor time allowed to inspect the rear roof cap is 0.3 hours (18 minutes) per bus.

Labor time allowed for installing rivets will be reimbursed at 2 minutes per rivet.

Warranty applications may be submitted to Blue Bird VIA ClaimTrac (use create campaign/bulletin claim).

Federal law requires that any vehicle lessor receiving this recall notice must forward a copy of this notice to the lessee within ten days.

Dealers are reminded of their responsibilities under section 154 of The National Traffic and Motor Vehicle Safety Act of 1991. Dealers are required to complete modifications on units in their inventory before delivering to the final owner. Reference Blue Bird Body Company Distributor Memo No. 42-92.

Questions regarding this recall campaign should be directed to me at (478) 822-2242.

Thank you,

Bill Coleman

Bill Coleman
Corporate Recall Administrator
Blue Bird Corporation

Table of Contents

R08NC

September 18, 2008

Dear Blue Bird Owner:

This notice is sent to you in accordance with the requirements of the National Traffic and Motor Vehicle Safety Act.

Blue Bird Body Company has decided that certain 2004 through 2009 model year Blue Bird All American and conventional school buses manufactured from March 06, 2003 through March 28, 2008 fail to conform to Federal Motor Vehicle Safety Standard No. 221, (School Bus Body Joint Strength).

On the subject buses, the rivet pattern may be incorrect in sections of the rear roof sheet joint that attaches it to the rear roof cap. In the event of a crash, these panels may separate exposing the occupants to increased risk of injury. Blue Bird is conducting a recall to correct this noncompliance. Buses with the noncompliance must be corrected according to the instructions provided with recall R08NC, copy attached.

Your Blue Bird bus(es) affected by recall R08NC are identified by body serial number(s) on the enclosed reply sheets. If you no longer own the subject bus(es), please complete the appropriate section of the pink cover sheet and return to Blue Bird in the enclosed pink postage prepaid envelope.

To receive parts required to correct this condition, you will need to inspect the rivet pattern using the enclosed template. On the enclosed reply sheet for R08NC enter the number of rivets omitted, indicate your roof color, date of inspection, and **correct UPS shipping address**. Sign and return the reply sheet in one of the enclosed pink reply envelopes. Rivets and sealer will be shipped at no charge via UPS to the address provided.

If no rivets are found missing, complete the pink reply sheet and return to Blue Bird in one of the enclosed pink postage prepaid reply envelopes.

Labor time allowed to inspect the rear roof cap is 0.3 hours (18 minutes) per bus.

Labor time allowed for installing rivets will be reimbursed at 2 minutes per rivet.

A qualified technician should perform this modification or you may contact your Blue Bird distributor for assistance. Reimbursement for labor may be obtained by completing the **pink** request for reimbursement sheet provided and returning it to Blue Bird in the enclosed **pink** postage prepaid envelope.

If the modifications/repairs directed by this notification were performed on your bus prior to the receipt of this recall notification, complete and sign the recall reply sheet and attached a copy of the work order/invoice. Mail the documents in the **pink** self-addressed postage paid envelope included with the recall notification to Blue Bird for warranty consideration. Reimbursements will be made in accordance with the requirements of the National Highway Transportation Safety Act, title 49 Code of Federal Regulations, Parts 573 and 577.

Federal law requires that any vehicle lessor receiving this recall notice must forward a copy of this notice to the lessee within ten days.

If Blue Bird Body Company should fail to or is unable to remedy this condition without charge to you, you may contact:

ADMINISTRATOR
NATIONAL HIGHWAY TRAFFIC SAFETY ADMINISTRATION
1200 NEW JERSEY AVENUE, SE
WASHINGTON, D.C. 20590

or you may call The National Highway Traffic Safety Administration toll free at:

1-888-327-4236
TTY: 1-800-424-9153
or go to: http://www.safercar.gov

Questions regarding this recall campaign should be directed to me at (478) 822-2242.

Thank you,

Bill Coleman

Bill Coleman
Corporate Recall Administrator
BLUE BIRD CORPORATION

Table of Contents

RECALL R08NC
INSPECTION SHEET

Body Number	Roof Color	Number Rivets Needed	Date Inspected

Ship Rivets to: Name: _____

Street Address: _____

City: _____ State: _____ ZIP _____

Telephone: _____

Inspected by: _____

BLUE BIRD

Rear Roof Cap Rivets RECALL

MODELS AFFECTED: *2005 through 2009 model Blue Bird Vision and All American School Buses manufactured at Fort Valley, Georgia from January 22, 2004 through March 28, 2008* ***and*** *2004 through 2007 model Blue Bird Vision and All American School Buses manufactured at Lafayette, Georgia from March 06, 2003 through June 16, 2006.*

R08NC

SERVICE RECALL

ISSUE

On some units, the rivet spacing may be incorrect in some segments of the rear roof sheet and rear roof cap joint, resulting in noncompliance with FMVSS 221, School Bus Body Joint Strength.

CORRECTIVE ACTION

Inspect the rivet spacing at the joint and install additional rivets as required by specification.

WARNING ***This procedure requires working from ladders or scaffolds to reach the top of the bus. Observe all safety precautions to secure the bus from rolling and for use of ladders or scaffolds.***

PROCEDURE

1 Park vehicle on level surface, apply parking brake, remove ignition key and chock wheels.

2 Inspect rivet spacing at rear roof sheet and rear roof cap joint. Joint must have a minimum of six rivets in an eight inch segment.

2.1 Place the template over the joint and parallel to the edge of the roof sheet, allowing roof rivets to be exposed through the opening in the template as shown.

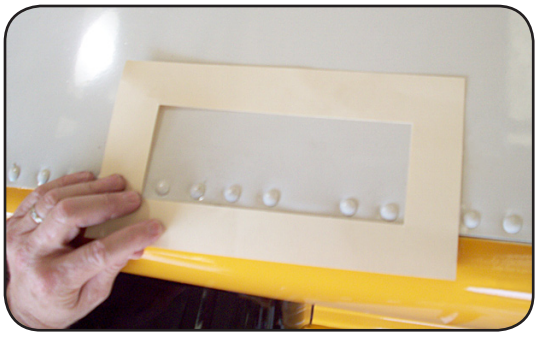

2.2 Move the template from one side of the rear roof cap to the opposite side.

2.3 If a segment in the rear roof cap joint contains less than six rivets, additional rivets are required. Mark each area that requires additional rivets.

2.4 If one rivet is required; add a rivet equally spaced between the two rivets with the largest space in this section.

2.5 If additional rivets are required; add additional rivets between the largest spaces until a minimum of six (6) rivets have been added in the eight (8) inch segment.

3 Install rivet/s at each mark. Using a short 17/64" drill bit, drill a hole through the roof cap, roof sheet, and rear bow flange. Be sure to drill hole on a common centerline with existing rivets.

BLUE BIRD

RECALL

4 Place a small amount of Vinyl Gray 5522 Sealant (Blue Bird # 0898627) in each drilled hole.

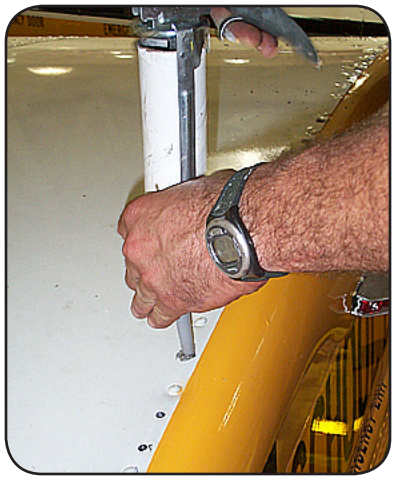

5 The supplied ¼" blind rivets (Blue Bird # 1854397) are pre-painted white or school bus chrome yellow. Install a rivet of the appropriate color into each hole.

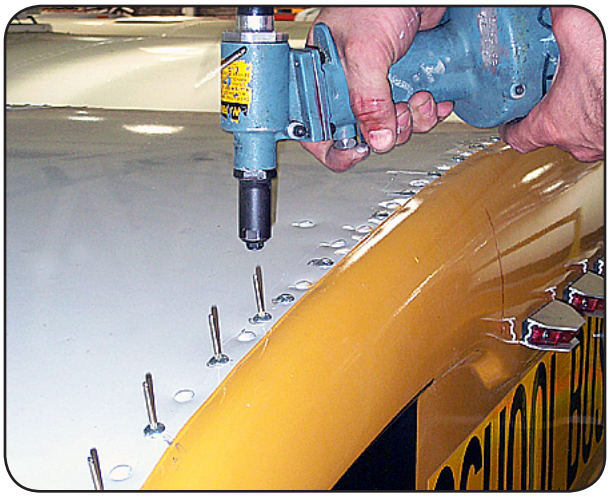

6 Clean up any sealant that may have squeezed out or smeared during rivet installation.

7 With the correct color paint, touch up the center of each blind rivet where the stem was removed during installation.

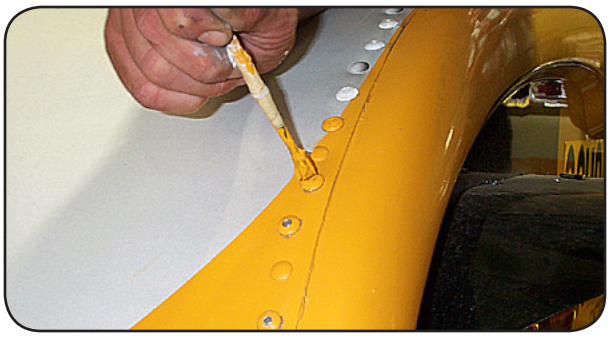

PARTS LIST

PART NUMBER	QUANTITY	DESCRIPTION
0898627	1 per bus	Tube, Vinyl Gray 5522 Sealant
1854397	As Required	Rivet, .25" Blind (both White and Yellow)

BLUE BIRD

R09PD

DATE: **APRIL 07, 2009**

TO: **U.S. DEALERS**

SUBJECT: **RECALL R09PD** **INCORRECT BOLTS AND/OR SPACER IN ENGINE COOLING FAN**

Dear Blue Bird Owner:

This notice is sent to you in accordance with the requirements of the National Traffic and Motor Vehicle Safety Act.

Blue Bird has decided that a defect which relates to motor vehicle safety exists on 2008 and 2009 model year "Vision" conventional school buses manufactured from January 18, 2007 through October 29, 2008 and equipped with Caterpillar C7 and C7 07engines.

On the subject buses, incorrect bolts and/or spacers may have been installed to attach the fan blade to the fan clutch. As a result, the fan blade may separate from the clutch and potentially cause property damage or personal injury to persons in or near the front of the bus. Blue Bird is conducting a recall to correct this defect. Buses with this defect must be modified according to the enclosed instructions for Recall R09PD

If our records indicate affected buses were delivered in your service area, a printout identifying affected buses is enclosed. **Dealers should verify correct owners and assure that complete shipping addresses are provided for each listed vehicle.**

If you have in your possession or have sold a bus that was purchased from another dealer that may be affected by this recall, please notify me at 478-822-2242.

NOTE: If Service Bulletin S08NR has already been completed on a unit no further action is required.

Replacement bolts will be shipped directly to owners so bolts can be replaced, if needed, at time of inspection.

Dealers should request replacement bolts for buses at their facility from Blue Bird Recall Administration. Dealers will need to provide the body number for each bus requiring inspection at their facility.

BLUE BIRD CORPORATION
P.O. Box 937 • Fort Valley, Georgia 31030
Phone: (478) 825-2021

Labor time to inspect for correct bolt and spacer installation is 0.1 hrs (6 minutes) per bus.

Labor time to install replacement bolts and spacer, if needed, is 0.4 hrs (24 minutes) per bus.

If the spacer is incorrect you will need to contact Blue Bird Recall Administration at 478-822-2242 for a replacement spacer. Dealers will need to provide body numbers for each bus requiring a replacement spacer.

Warranty applications for labor reimbursement may be submitted to Blue Bird iWarranty (Campaigns/Claims).

Federal law requires that any vehicle lessor receiving this recall notice must forward a copy of this notice to the lessee within ten days.

Dealers are reminded of their responsibilities under section 154 of The National Traffic and Motor Vehicle Safety Act of 1991. Dealers are required to complete modifications on units in their inventory before delivering to the final owner. Reference Blue Bird Body Company Distributor Memo No. 42-92.

Questions regarding this recall campaign should be directed to me at (478) 822-2242.

Thank you,

Bill Coleman

Bill Coleman
Corporate Recall Administrator
Blue Bird Corporation

BLUE BIRD

R09PD

April 07, 2009

Dear Blue Bird Owner:

This notice is sent to you in accordance with the requirements of the National Traffic and Motor Vehicle Safety Act.

Blue Bird has decided that a defect which relates to motor vehicle safety exists on certain 2008 and 2009 model year "Vision" conventional school buses manufactured from January 18, 2007 through October 29, 2008 and equipped with Caterpillar C7 and C7 07engines.

On the subject buses, incorrect bolts may have been installed to attach the fan blade to the fan clutch. On some of the buses incorrect spacers may also have been installed. As a result, the fan blade may separate from the clutch and potentially cause property damage or personal injury to persons in or near the front of the bus. Blue Bird is conducting a recall to correct this defect.

Buses with this defect must be modified according to the enclosed instructions for Recall R09PD. A qualified technician should perform Recall R09PD or you may contact your Blue Bird dealer for assistance.

Your Blue Bird bus(es) affected by this recall are identified by body serial number(s) on the enclosed reply sheets. If you no longer own the subject bus(es), please complete the appropriate section of the **pink** reply sheet and return to Blue Bird in the enclosed pink postage prepaid envelope.

NOTE: If Service Bulletin S08NR has already been completed on your bus(es) no further action is required.

Replacement bolts for Recall R09PD are enclosed with this notification so replacement bolts, if needed, can be installed at time of inspection.

Labor time to inspect for correct bolt and spacer installation is 0.1 hrs (6 minutes) per bus.

Labor time to install replacement bolts and spacer, if needed, is 0.4 hrs (24 minutes) perbus.

If the spacer is incorrect, you will need to contact Blue Bird Recall Administration at 478-822-2242 to obtain a replacement spacer. Owners will need to provide the body numbers for each bus requiring a replacement spacer.

BLUE BIRD CORPORATION
P.O. Box 937 • Fort Valley, Georgia 31030
Phone: (478) 825-2021

Reimbursement for labor may be obtained by completing the **pink** request for reimbursement sheet provided and returning it to Blue Bird in the enclosed **pink** postage prepaid envelope.

If the modifications directed by this notification were performed on your bus prior to the receipt of this recall notification, complete and sign the recall reply sheet and attached a copy of the work order/invoice. Mail the documents in the **pink** self-addressed postage paid envelope included with the recall notification to Blue Bird for warranty consideration. Reimbursements will be made in accordance with the requirements of the National Highway Transportation Safety Act, Title 49 Code of Federal Regulations, Parts 573 and 577.

Federal law requires that any vehicle lessor receiving this recall notice must forward a copy of this notice to the lessee within ten days.

If Blue Bird Body Company should fail to or is unable to remedy this condition without charge to you, you may contact:

ADMINISTRATOR
NATIONAL HIGHWAY TRAFFIC SAFETY ADMINISTRATION
1200 NEW JERSEY AVENUE, SE
WASHINGTON, D.C. 20590

Or, you may call The National Highway Traffic Safety Administration toll free at:

1-888-327-4236
TTY 1-800-424-9153

Or, go to: HTTP:/WWW.SAFERCAR.GOV

Questions regarding this recall campaign should be directed to me at (478) 822-2242.

Thank you,

Bill Coleman

Bill Coleman
Corporate Recall Administrator
BLUE BIRD CORPORATION

BLUE BIRD

Fan Clutch Spacers

RECALL

MODELS AFFECTED: *2008-2009 BBCV Visions w/ 2007 Cat Engines*

R09PD

ISSUE

Fan may separate from fan clutch and may damage fans blades, fan clutch, radiator, hoses and other surrounding components.

CORRECTIVE ACTION

Inspect fan spacer length and install new spacer and bolts as required.

WARNING ***Always follow all Federal, State, Local, and Shop safety standards and use proper safety equipment when performing this procedure.***

INSPECTION

1 Park vehicle on a level surface, apply parking brake, turn engine off, remove ignition key and chock wheels.

2 Disconnect batteries.

3 Open engine hood.

4 Measure the length of the spacer between the fan blade and the fan clutch. See Diagram and Chart to the right for correct installations and determine procedure needed.

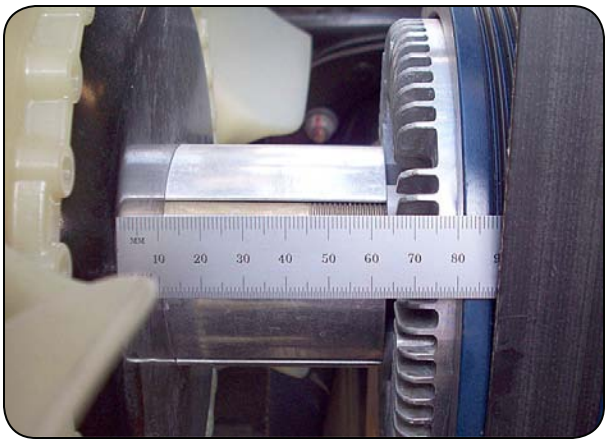

Inspection

PROCEDURE 1 ***(with correct spacer and wrong capscrews)***
For CAT C707 with CGI & DPF, and a 66.7mm (2 5/8 inch) spacer.
Note: Caterpillar C707 with CGI and DPF has a Regen switch mounted on the entrance door side fire wall.

NOTE: ***CAT C707 engines are equipped with Clean Gas Induction (CGI) and a Diesel Particulate Filter (DPF). CAT C7 and Export units are not equipped with CGI and DPF.***

PROCEDURE 2 ***(with wrong spacer and wrong capscrews)***
For CAT C707 with CGI & DPF, and a 52.8mm (2 5/64 inch) spacer.
Note: Caterpillar C707 with CGI and DPF has a Regen switch mounted on the entrance door side fire wall.

PROCEDURE 3 ***(with wrong spacer and wrong capscrews)***
For CAT C7 without CGI & DPF, or Export unit; with a 66.7mm (2 5/8 inch) spacer.

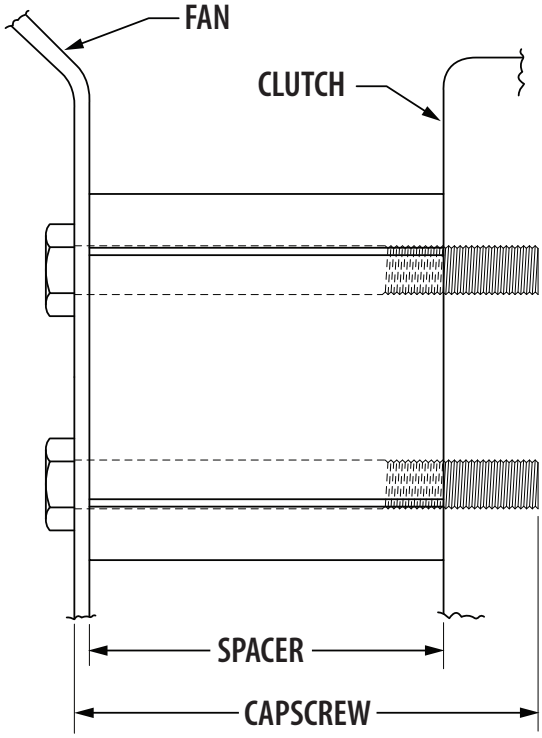

ENGINE	SPACER	CAPSCREW
CAT C707 with CGI & DPF	66.7mm (2 5/8 inches)	90mm M10-1.5 X 90mm
CAT C7 or Export without CGI & DPF	52.8mm (2 5/64 inches)	70mm M10-1.5 X 70mm

SERVICE RECALL

BLUE BIRD

RECALL

PROCEDURE 1 *(With correct spacer and wrong capscrews.)*

For CAT C707 with CGI & DPF, and a 66.7mm (2 5/8 inch) spacer.
Note: Caterpillar C707 with CGI and DPF has a Regen switch mounted on the entrance door side fire wall.

1 Remove and retain the four nuts attaching the fan shroud to the radiator. Slide the shroud rearward for access to the four capscrews attaching the fan to the fan clutch.

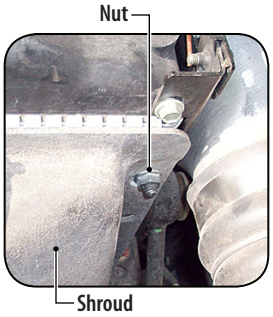

2 Remove the four 80mm capscrews and discard. Retain the four lock washers.

3 Install four 90mm capscrews (Blue Bird #10000385) with four lock washers and torque to 20-25 lb. ft. *Note: Four 90mm capscrews (Blue Bird #10000385) shipped with original Service Bulletin.*

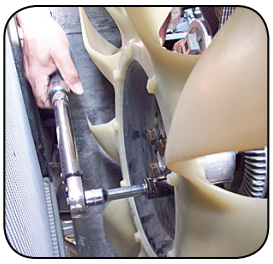

4 Slide fan shroud forward and reattach with four nuts removed in step one.

5 Close engine hood.

6 Reconnect batteries and place the bus back in service.

PARTS LIST

PART NUMBER	QUANTITY	DESCRIPTION
10000385	4	*Capscrew, Hex head, M10-1.5 x 90mm*

Supplied with original Service Bulletin.

PROCEDURE 2 *(With wrong spacer and wrong capscrews.)*

For CAT C707 with CGI & DPF, and a 52.8mm (2 5/64 inch) spacer.
Note: Caterpillar C707 with CGI and DPF has a Regen switch mounted on the entrance door side fire wall.

1 Remove and retain the four nuts attaching the fan shroud to the radiator. Slide the shroud rearward for access to the four capscrews attaching the fan to the fan clutch.

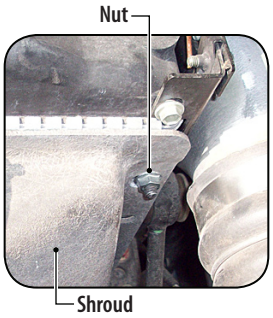

2 Remove and discard the four 80mm capscrews and spacer. Retain the four lock washers.

3 Install new Spacer (Blue Bird #10005240) with four 90mm capscrews (Blue Bird #10000385) and four lock washers. Torque to 20-25 lb. ft.

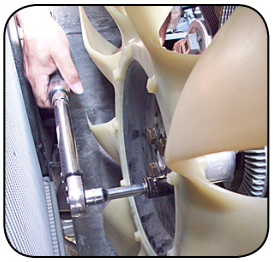

4 Slide fan shroud forward and reattach with four nuts removed in step one.

5 Close engine hood.

6 Reconnect batteries and place the bus back in service.

PARTS LIST

PART NUMBER	QUANTITY	DESCRIPTION
10005240	1	Spacer, Clutch, Fan, Horton, 00115258
10000385	4	**Capscrew, Hex head, M10-1.5 x 90mm**

Order only if not provided

BLUE BIRD

RECALL

PROCEDURE 3 *(Export only with wrong spacer and wrong capscrews.)*

For CAT C7 without CGI & DPF, or Export unit; with a 66.7mm (2 5/8 inch) spacer.

1 Remove and retain the four nuts attaching the fan shroud to the radiator. Slide the shroud rearward for access to the four capscrews attaching the fan to the fan clutch.

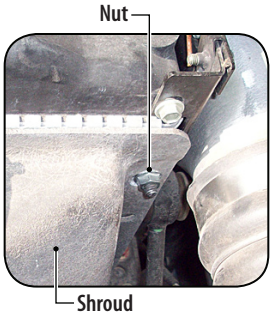

2 Remove and discard the four capscrews and spacer. Retain the four lock washers.

3 Install new Spacer (Blue Bird #10005241) with four 70mm capscrews (Blue Bird #01265990) and four lock washers. Torque to 20-25 lb. ft.

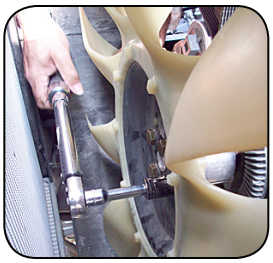

4 Slide fan shroud forward and reattach with four nuts removed in step one.

5 Close engine hood.

6 Reconnect batteries and place the bus back in service.

PARTS LIST

PART NUMBER	QUANTITY	DESCRIPTION
10005241	1	Spacer, Clutch, Fan, Horton, 00068057
01265990	4	Capscrew, Hex head, M10-1.5 x 700mm

BLUE BIRD

R09PF

DATE: **JUNE 30, 2009**

TO: **U.S. DEALERS**

SUBJECT: **RECALL R09PF** **INSUFFICIENT TORQUE ON STEERING GEAR MOUNTING FASTENERS**

This notice is sent to you in accordance with the requirements of the National Traffic and Motor Vehicle Safety Act.

Blue Bird has decided that a defect which relates to motor vehicle safety exists on certain 2009 model year All American school buses manufactured from July 22, 2008 through November 22, 2008.

On the subject buses, the steering gear mounting fasteners may not have been properly torqued. Improperly torqued fasteners may cause the steering gear to separate from the chassis frame which could result in a loss of steering control, possibly resulting in a vehicle crash. Blue Bird is conducting a recall to correct this defect. The steering gear mounting fasteners on the subject buses must be inspected and, if needed, torqued to the specifications provided in the enclosed instructions for Recall R09PF.

If our records indicate affected buses were delivered in your service area, a printout identifying affected buses is enclosed. **Dealers should verify correct owners and assure that complete shipping addresses are provided for each listed vehicle.**

If you have in your possession or have sold a bus that was purchased from another dealer that may be affected by this recall, please notify me at 478-822-2242.

Labor time to inspect and torque steering gear mounting fasteners is on e(1) hour per bus.

Warranty applications for labor reimbursement may be submitted to Blue Bird iWarranty (Campaigns/Claims).

Federal law requires that any vehicle lessor receiving this recall notice must forward a copy of this notice to the lessee within ten days.

BLUE BIRD CORPORATION
P.O. Box 937 • Fort Valley, Georgia 31030
Phone: (478) 825-2021

Dealers are reminded of their responsibilities under section 154 of The National Traffic and Motor Vehicle Safety Act of 1991. Dealers are required to complete modifications on units in their inventory before delivering to the final owner. Reference Blue Bird Body Company Distributor Memo No. 42-92.

Questions regarding this recall campaign should be directed to me at (478) 822-2242.

Thank you,

Bill Coleman

Bill Coleman
Corporate Recall Administrator
Blue Bird Corporation

BLUE BIRD

R09PF

June 30, 2009

Dear Blue Bird Owner:

This notice is sent to you in accordance with the requirements of the National Traffic and Motor Vehicle Safety Act.

Blue Bird has decided that a defect which relates to motor vehicle safety exists on certain 2009 model year All American school buses manufactured from July 22, 2008 through November 22, 2008.

On the subject buses, the steering gear mounting fasteners may not have been properly torqued. Improperly torqued fasteners may cause the steering gear to separate from the chassis frame which could result in a loss of steering control, possibly resulting in a vehicle crash. Blue Bird is conducting a recall to correct this defect. The steering gear mounting fasteners on the subject buses must be inspected and, if needed, torqued to the specifications provided in the enclosed instructions for Recall R09PF.

A qualified technician should perform this recall. You may contact your Blue Bird dealer to arrange to have this recall performed. Or, if you prefer, you may perform this recall yourself or have a qualified repair facility convenient to you perform this recall.

Your Blue Bird bus(es) affected by this recall are identified by body serial number(s) on the enclosed reply sheets. If you no longer own the subject bus(es), please complete the appropriate section of the **pink** reply sheet and return to Blue Bird in the enclosed pink postage prepaid envelope.

Labor time to inspect and re-torque the steering gear mounting fasteners is one (1) hour per bus.

Reimbursement for labor may be obtained by completing the **pink** request for reimbursement sheet provided and returning it to Blue Bird in the enclosed **pink** postage prepaid envelope.

BLUE BIRD CORPORATION
P.O. Box 937 • Fort Valley, Georgia 31030
Phone: (478) 825-2021

If the modifications directed by this notification were performed on your bus prior to the receipt of this recall notification, complete and sign the recall reply sheet and attached a copy of the work order/invoice. Mail the documents in the **pink** self-addressed postage paid envelope included with the recall notification to Blue Bird for warranty consideration. Reimbursements will be made in accordance with the requirements of the National Highway Transportation Safety Act, Title 49 Code of Federal Regulations, Parts 573 and 577.

Federal law requires that any vehicle lessor receiving this recall notice must forward a copy of this notice to the lessee within ten days.

If Blue Bird Body Company should fail to or is unable to remedy this condition without charge to you, you may contact:

ADMINISTRATOR
NATIONAL HIGHWAY TRAFFIC SAFETY ADMINISTRATION
1200 NEW JERSEY AVENUE, SE
WASHINGTON, D.C. 20590

Or, you may call The National Highway Traffic Safety Administration toll free at:

1-888-327-4236
TTY 1-800-424-9153

Or, go to: HTTP:/WWW.SAFERCAR.GOV

Questions regarding this recall campaign should be directed to me at (478) 822-2242.

Thank you,

Bill Coleman

Bill Coleman
Corporate Recall Administrator
BLUE BIRD CORPORATION

Steering Gear Bolts

RECALL

MODELS AFFECTED: *2009 All American Forward Engines and Rear Engines*

R09PF

RECALL CAMPAIGN

ISSUE

Steering gear mounting bolts may have been incorrectly torqued at installation.

CORRECTIVE ACTION

Inspect and re-torque the four bolts that attach the steering gear to the frame rail.

WARNING ***Always follow all Federal, State, Local, and Shop safety standards and use proper safety equipment when performing this procedure.***

PROCEDURE

1 Park the bus on a level surface, apply parking brakes, switch engine off and chock wheeels.

2 Disconnect the batteries removing the negative cable first.

WARNING ***When working underneath a vehicle, always support the unit with jack stands under the frame rail.***

For easiser access to the steering gear fasteners, additional clearance underneath the bus can be provided by raising the bus by means of a suitable floor jack or hydraulic lift/s. Raise the bus as needed and place suitable jack stands under each frame for support.

3 Inspect the bolts and nuts for any damage. If damaged, replace, *DO NOT* re-torque. If damage exist and new fasteners are required, contact:

Blue Bird Body Company
Attn: Recall Administrator
P.O. Box 937
Fort Valley, Georgia 31030
Phone: 478-822-2242

4 If no damage exist, re-torque the fasteners to 270-300 ft. lbs. See diagram below.

5 Remove jack stands if used and lower the bus.

6 Reconnect the batteries installing the negative battery cable last.

7 Remove wheel chocks and place bus back into service.

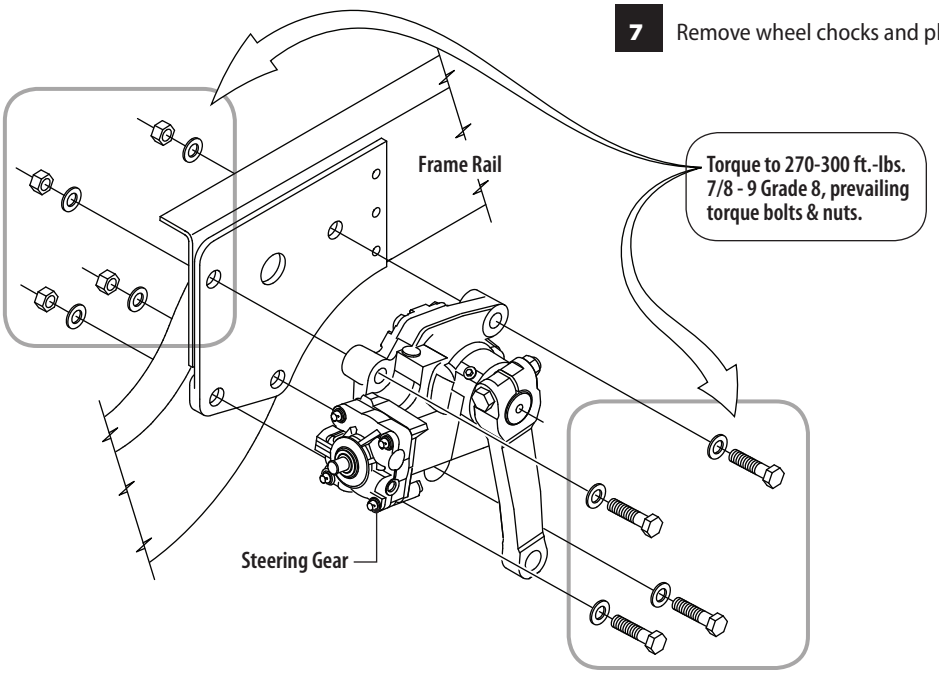

BLUE BIRD

R09PH

DATE: **AUGUST 11, 2009**

TO: **U.S. DEALERS**

SUBJECT: **RECALL R09PH** **POWER STEERING RESERVOIR GASKET FAILURE**

This notice is sent to you in accordance with the requirements of the National Traffic and Motor Vehicle Safety Act.

Blue Bird has decided that a defect which relates to motor vehicle safety exists on 2008, 2009 and 2010 model year "Vision" conventional school buses manufactured from March 27, 2007 through June 10, 2009.

On the subject buses, the lid gasket on the power steering reservoir may deteriorate and contaminate the power steering fluid resulting in potential loss of power steering assist. The loss of power steering assist could result in a vehicle crash.

Blue Bird is conducting a recall to correct this defect. Buses with this defect must be modified according to the enclosed instructions for Recall R09PH

If our records indicate affected buses were delivered in your service area, a printout identifying affected buses is enclosed. **Dealers should verify correct owners and assure that complete shipping addresses are provided for each listed vehicle.**

If you have in your possession or have sold a bus that was purchased from another dealer that may be affected by this recall, please notify me at 478-822-2242.

Labor time required to replace the power steering reservoir lid gasket is 0.4 hours (24 minutes) per bus.

If the power steering reservoir lid gasket has deteriorated and any part of the gasket is missing, the steering system may be contaminated and must be drained and flushed. Labor time to drain and flush the steering system is 2 hours per bus.

Replacement gaskets for stock units must be requested from Blue Bird Recall Administration. You will need to provide body number(s) and a shipping address.

A yellow reply sheet is provided with the owner notification letter so owners may request replacement gaskets direct from Blue Bird Recall Administration.

BLUE BIRD CORPORATION
P.O. Box 937 • Fort Valley, Georgia 31030
Phone: (478) 825-2021

Warranty applications for labor reimbursement may be submitted to Blue Bird iWarranty (Campaigns/Claims).

Federal law requires that any vehicle lessor receiving this recall notice must forward a copy of this notice to the lessee within ten days.

Dealers are reminded of their responsibilities under section 154 of The National Traffic and Motor Vehicle Safety Act of 1991. Dealers are required to complete modifications on units in their inventory before delivering to the final owner. Reference Blue Bird Body Company Distributor Memo No. 42-92.

Questions regarding this recall campaign should be directed to me at (478) 822-2242.

Sincerely,

Bill Coleman

Bill Coleman
Corporate Recall Administrator
Blue Bird Corporation

BLUE BIRD

R09PH

August 11, 2009

Dear Blue Bird Owner:

This notice is sent to you in accordance with the requirements of the National Traffic and Motor Vehicle Safety Act.

Blue Bird has decided that a defect which relates to motor vehicle safety exists on certain 2008, 2009 and 2010 model year "Vision" conventional school buses and non-school buses manufactured from March 27, 2007 through June 10, 2009.

On the subject buses, the lid gasket on the power steering reservoir may deteriorate and contaminate the power steering fluid resulting in potential loss of power steering assist. The loss of power steering assist could result in a vehicle crash.

A qualified technician should perform this recall. You may contact your Blue Bird dealer to arrange to have this recall performed. Or, if you prefer, you may perform this recall yourself or have a qualified repair facility convenient to you perform this recall.

Your Blue Bird bus(es) affected by this recall are identified by body serial number(s) on the enclosed reply sheets. If you no longer own the subject bus(es), please complete the appropriate section of the **pink** reply sheet and return to Blue Bird in the enclosed pink postage prepaid envelope.

To receive replacement gaskets for your power steering reservoir lid, verify your shipping address on the enclosed yellow reply sheet, sign and return to Blue Bird in the pink postage paid reply envelope. Replacement gaskets will be shipped via UPS ground service to the address provided. Note: UPS does not ship to P.O. boxes.

Labor time to replace the power steering reservoir lid gasket is 0.4 hrs (24 minutes) per bus.

If the power steering reservoir lid gasket has deteriorated and any part of the gasket is missing, the steering system may be contaminated and must be drained and flushed. Labor time to drain and flush the steering system is 2 hours per bus.

Reimbursement for labor may be obtained by completing the **pink** request for reimbursement sheet provided and returning it to Blue Bird in the enclosed **pink** postage prepaid envelope.

BLUE BIRD CORPORATION
P.O. Box 937 • Fort Valley, Georgia 31030
Phone: (478) 825-2021

Federal law requires that any vehicle lessor receiving this recall notice must forward a copy of this notice to the lessee within ten days.

If the modifications directed by this notification were performed on your bus prior to the receipt of this recall notification, complete and sign the recall reply sheet and attached a copy of the work order/invoice. Mail the documents in the **pink** self-addressed postage paid envelope included with the recall notification to Blue Bird for warranty consideration. Reimbursements will be made in accordance with the requirements of the National Highway Transportation Safety Act, Title 49 Code of Federal Regulations, Parts 573 and 577.

If Blue Bird Body Company should fail to or is unable to remedy this condition without charge to you, you may contact:

ADMINISTRATOR
NATIONAL HIGHWAY TRAFFIC SAFETY ADMINISTRATION
1200 NEW JERSEY AVENUE, SE
WASHINGTON, D.C. 20590

Or, you may call The National Highway Traffic Safety Administration toll free at:

1-888-327-4236
TTY 1-800-424-9153

Or, go to: HTTP:/WWW.SAFERCAR.GOV

Questions regarding this recall campaign should be directed to me at (478) 822-2242.

Thank you,

Bill Coleman

Bill Coleman
Corporate Recall Administrator
BLUE BIRD CORPORATION

Power Steering Reservoir Gasket

RECALL

BLUE BIRD

MODELS AFFECTED: *2009-2010 BBCV Visions and all 2008 BBCV Visions serviced under bulletin, S07MU Power Steering Reservoir Cap*

R09PH

RECALL CAMPAIGN

ISSUE

Power steering reservoir cap gasket may soften and break apart which may cause power steering pump to not function correctly.

CORRECTIVE ACTION

Replace the existing gasket with new gasket made of approved Garlock material.

WARNING ***Always follow all Federal, State, Local, and Shop safety standards and use proper safety equipment when performing this procedure.***

PROCEDURE

WARNING ***Perform this procedure with Power Steering System components and fluid at ambient temperature.***

1 Park vehicle on level surface with front tires straight forward and apply parking brake. Remove key and chock wheels.

2 Raise engine hood and locate Power Steering Reservoir on driver's side frame rail.

3 Clean around the reservoir cap and adjacent components before proceeding.

4 Remove and retain the retaining nut and flat washer; discard the rubber washer.

5 Carefully remove the reservoir cap and gasket.

6 Inspect the gasket.

6.1 Carefully wipe any excess fluid residue from the gasket.

6.2 Look for signs of deterioration and/or separation. If gasket has separated and any part is missing, the steering system may be contaminated and must be drained and flushed. Proceed to Step 7.

6.3 If gasket sags or bulges but has not separated or broken apart (is intact) steering system has not been contaminated by decaying gasket material, proceed to Step 8.

7 Drain and flush steering system following ordered steps outlined in "**TRW Flush and Fill Service Procedure #SRV-100**" on pages 3 - 6 of this recall. Additional service information can be obtained at: **http://trucksteering.trwauto.com/files/TRW800.pdf**

- Replace power steering reservoir filter with new filter, B.B. part #00118439 obtainable from:

Blue Bird Body Company
Attn: Recall Administrator
P.O. Box 937
Fort Valley, Georgia 31030
Phone: 478-822-2242

- Refill using power steering fluid (***DEXRON III or FINA Multi-Purpose ATF***) until the fluid is at the half way level in the sight glass.

CAUTION ***Do Not use Dexron VI fluid.***

CAUTION ***Do Not overfill.***

CAUTION ***Do Not allow contaminants to enter the power steering reservoir.***

- Normal service interval for the filter is 12 months / 12,000 miles whichever occurs first. More frequent filter replacement may be required under severe duty conditions.

8 Remove and discard gasket from reservoir cap.

9 Clean any remaining glue or other contaminants from the surface of the reservoir cap.

10 Install large flat washer onto spring and stud inside reservoir.

BLUE BIRD

RECALL

11 Place the side of the new gasket with the printed surface next to the cap and align the holes in the gasket with the holes in the cap.

CAUTION ***Do Not apply any type of gasket sealant to the new gasket or reservoir***

12 Place the new assembly back onto the reservoir stud, squaring the sides of the cap and gasket to the sides of the reservoir.

13 While pressing the cap down against the spring, install the new small rubber washer and the small flat washer removed in Step 4.

14 Install the retaining nut onto the stud and tighten while holding the cap and gasket square to the reservoir. Torque the retaining nut to 10 ft. lbs.

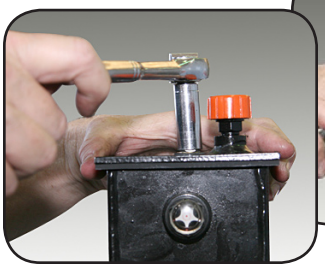

Square and tighten

then Torque to 10 ft. lbs.

15 Remove the breather cap and verify that the holes in the reservoir cap and gasket are aligned. Replace cap.

16 Start engine and steer bus full left to full right 5 - 6 times.

17 Check reservoir cap and gasket for leaks.

18 Recheck fluid level in sight glass and fill as necessary.

CAUTION ***Do Not overfill.***

19 Close hood, remove chocks and place bus back in normal service..

PARTS LIST

PART NUMBER	QUANTITY	DESCRIPTION
10011573	1	Kit, Power Steering Reservoir Gasket
00118439	As Req'd.	Filter Assy, Power Steering Reservoir

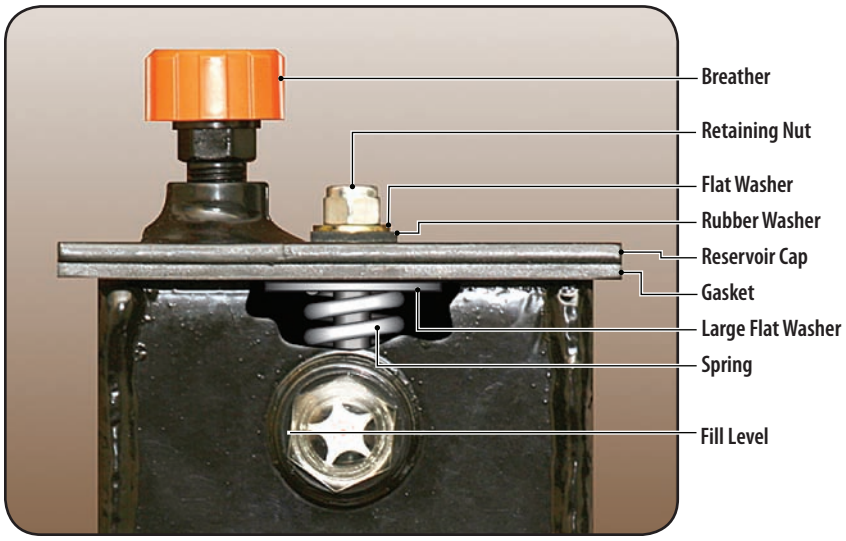

BLUE BIRD

RECALL

R09PH

RECALL CAMPAIGN

TRW Automotive
Commercial Steering Systems

Service Procedure #SRV-100

Flushing and Filling the Steering System

Draft August, 2008

This TRW Commercial Steering Systems service procedure has been written to help you repair commercial vehicles more efficiently. This procedure should not replace your manuals; you should use them together. These materials are intended for use by properly trained, professional mechanics, NOT "Do-it-yourselfers". You should not try to diagnose or repair steering problems unless you have been trained, and have the right equipment, tools and know-how to perform the work correctly and safely.

NOTE **The steering system must be flushed every time a gear, pump, or other major components get replaced, regardless if the components are new or are remanufactured**

1. Set parking brake on vehicle and block rear wheels.
2. Raise the front end off the ground.
3. Take vehicle out of gear and put into neutral position.
4. Raise hood and wipe down area around the steer ing gear and the hydraulic lines related to the steering system.
5. Place a drip pan under the steering gear to catch the oil. If the system includes an assist cylinder, place a pan under the assist cylinder to catch draining oil.
6. Remove both the pressure and return lines (Figure 1) from the steering gear and allow the oil to drain into the empty container. If applicable, remove the two pressure lines from the assist gear or cylinder and drain into a drip pan. Remove hoses as required to al low cooler to drain its oil tubes.
7. Remove filter (Figure 2) from the power steering fluid reservoir and discard. Disconnect the supply line from the reservoir.
8. Rinse and clean the inside of the reservoir with automatic transmission fluid. Do not use a shop rag to wipe the inside of the reservoir. If the reservoir is made from plastic inspect for cracks and damage. Replace with a new part if necessary.
9. Turn steering wheel from full left to full right 3-4 times. Collect the drained oil in the same container(s) as in Step 6. This will purge the oil from the steering gear(s).

Figure 1

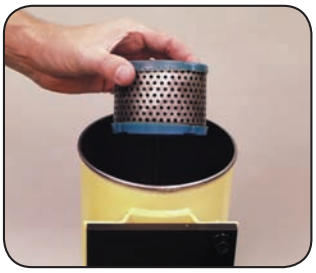

Figure 2

Figure 3

10. Reconnect pressure and return lines to the steering gear(s). Connect the supply line to the reservoir and then tighten all fittings.

11. Install new filter element into the reservoir.

12. Clean reservoir filler cap with automatic transmission fluid. Inspect gasket and replace if necessary.

13. Inspect all hydraulic hoses (Figure 3) for cracks, soft or sweat spots and signs of local collapse (remove all covers/corrugated tubing from hoses to do this) and replace any that are found to be defective.

14. Check any fittings and connectors for blockages. Clear any blockages using an appropriate method or use a new fitting/connector.

15. Fill reservoir with automatic transmission fluid and reinstall the filler cap (Figure 4).

16. Start engine for 10 seconds, stop, and check reservoir fluid level and top off if necessary. You may need to repeat this procedure 3 or 4 times.

17. Upon completion of filling the reservoir, start the engine and let it idle. At engine idle, steer full right and full left (Figure 5) once and return to straight ahead. Stop engine and check power steering reservoir level and top off if required.

⚠ CAUTION **Do not hold steering wheel at full turn for longer than 10 seconds as this will cause system to overheat**

18. Restart engine and steer full turns each direction 3 or 4 times.

19. Stop engine and recheck reservoir fluid level and adjust to correct level, if needed.

20. Inspect system for leaks and correct if necessary.

21. Bleed air from the system (see procedure below).

22. Remove drip pan and lower vehicle.

⚠ CAUTION **Recycle all used oil using an appropriate, environmentally accepted, method.**
DO NOT reuse used oil as its material properties and contamination levels will be unknown.

23. Remove blocks from wheels and return vehicle for normal service.

Figure 4

Figure 5

Air Bleeding the Steering System

Visual Identification

When you air bleed a steering system, you are simply allowing air trapped in the cavities of the steering gear to escape. As a general rule, if your steering gear is a "standard mount", you should use the Automatic Bleed method. If your gear is an "inverted mount", you will need to use the Manual Bleed method to purge the trapped air from the gear.

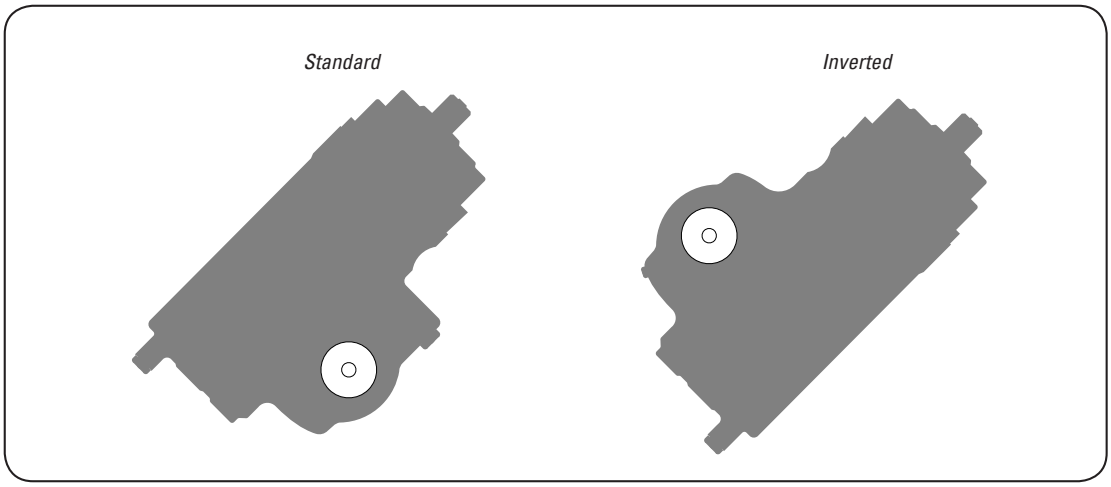

Gear Mounting Configurations

Automatic Bleed Gears

1. Fill the reservoir.
2. Start the engine, let it run for 10 seconds - without steering, then shut it off.
3. Check the reservoir, and refill if the fluid level has dropped.
4. Repeat at least three times, checking and refilling the reservoir each time if necessary.

NOTE	**Do not allow the fluid level to drop significantly or run out of the reservoir. This may induce air into the system.**

5. Start the engine and let it idle for 2 minutes - without steering. Shut off the engine and check the fluid level in the reservoir. Refill if required.
6. Start the engine again. Steer the vehicle from full left to full right several times. Automatic bleed systems should now be free from trapped air.
7. Finally, be sure to check the fluid level in the reservoir. Refill if necessary before returning the vehicle to service.

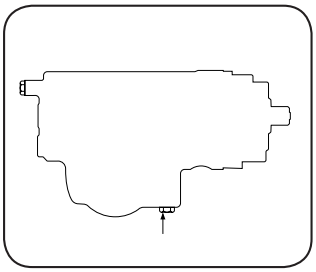

Auto Bleed Plug Location

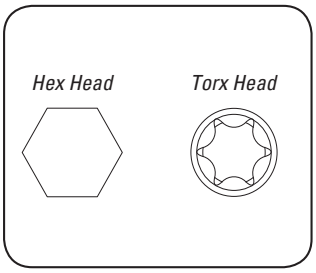

Auto Bleed Plug Styles

BLUE BIRD

RECALL

Manual Bleed Gears

1. Fill the reservoir.
2. Start the engine, let it run for 10 seconds - without steering, then shut it off.
3. Check the reservoir, and refill if the fluid level has dropped.
4. Repeat this process at least three times, checking and refilling the reservoir each time if necessary.

NOTE **Do not allow the fluid level to drop significantly or run out of the reservoir. This may induce air into the system**.

5. Start the engine and let it idle for 2 minutes - without steering. Shut off the engine and check the fluid level in the reservoir. Refill if required.
6. Start the engine again. Steer the vehicle from full left to full right several times.
7. Again, check the fluid level in the reservoir.
8. With the engine idling, steer from full left turn to full right turn several times. Stop steering with the wheels pointed straight ahead and loosen the manual bleed screw 2-3 turns.
9. Allow air and aerated fluid to "bleed out" until fluid appears without bubbles.
10. Close the bleed screw, refill the reservoir if required.
11. Repeat steps 8, 9 and 10 three or four times until all the air is discharged. Torque manual bleed screw to 45 in•lb.

⚠CAUTION **Do not turn steering wheel with bleed screw loosened.**

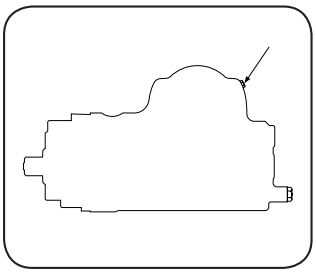

Manual Bleed Screw Location

Figure 1

Figure 2

5/16" Hexagon Screw

Manual Bleed Screw Style

TRW Commercial Steering Systems
P.O. Box 60
Lafayette, IN 47902
Phone: 765.423.5377
Fax: 765.429.1868

Table of Contents

BLUE BIRD

R10SL

DATE: **SEPTEMBER 24, 2010**

TO: **U.S. DEALERS**

SUBJECT: **RECALL R10SL** **STARTER CABLE AND ENGINE WIRING HARNESS MAY CONTACT ENGINE FAN HUB**

Dear Blue Bird Dealer:

This notice is sent to you in accordance with the requirements of the National Traffic and Motor Vehicle Safety Act.

Blue Bird has decided that a defect which relates to motor vehicle safety exists on certain 2007-2011 model year All American front engine school and non school buses manufactured from May 26, 2006 through August 07, 2010 and certain 2007 model year Commercial Series front engine non school buses manufactured from May 16, 2007 through March 14, 2008.

On the subject buses, an incorrect combination of flat washer and serrated nut may have been installed on the bolt that secures the starter cable and engine wiring harness retaining clamp to its attaching bracket at front of engine above engine cooling fan. The presence of the flat washer could prevent the serrated nut from locking against the attaching bracket, and over time, cause the serrated nut to loosen allowing the starter cable and main engine wiring harness to fall and contact the engine fan hub while in operation. If the starter cable or engine wiring harness contacts the engine fan hub while the fan is in operation, the cable and/or harness covering may abrade which could result in a direct short. A direct short could potentially result in a vehicle fire.

Blue Bird is conducting a recall to correct this defect. Buses with this defect must be modified according to the enclosed instructions for Recall R10SL.

If our records indicate affected buses were delivered in your service area, a printout identifying affected buses is enclosed. **Dealers should verify correct owners and assure that complete shipping addresses are provided for each listed vehicle.**

If you have in your possession or have sold a bus that was purchased from another dealer that may be affected by this recall, please notify me at 478-822-2242.

Labor time to install new locknuts and flat washers and inspect the routing of the starter cable and engine wiring harness is 0.5 hrs (30 minutes) per bus.

BLUE BIRD BODY COMPANY
P.O. Box 937 – 402 Blue Bird Blvd – Fort Valley, Georgia – (478) 825-2021

Replacement locknuts and flat washers must be ordered through Blue Bird Recall Administration. You will need to provide body number(s) and a UPS shipping address.

Replacement starter cables and engine wiring harnesses, if needed, must be ordered through Recall Administration. You will need to provide body number(s) and a UPS shipping address.

Warranty applications for labor reimbursement may be submitted to Blue Bird iWarranty (Campaigns/Claims).

Federal law requires that any vehicle lessor receiving this recall notice must forward a copy of this notice to the lessee within ten days.

It is a violation of Federal law for a dealer to deliver a new motor vehicle covered by this recall under a sale or lease until the defect is remedied. Therefore, dealers must complete modifications/repairs on units in their inventory before delivering to the final owner. Reference Blue Bird Body Company Distributor Memo No. 42-92.

Questions regarding this recall campaign should be directed to me at (478) 822-2242.

Sincerely,

Bill Coleman

Bill Coleman
Corporate Recall Administrator
Blue Bird Corporation

BLUE BIRD

R10SL

September 24, 2010

Dear Blue Bird Owner:

This notice is sent to you in accordance with the requirements of the National Traffic and Motor Vehicle Safety Act.

Blue Bird has decided that a defect which relates to motor vehicle safety exists on certain 2007-2011 model year All American front engine school and non school buses manufactured from May 26, 2006 through August 07, 2010 and certain 2007 model year Commercial Series front engine non school buses manufactured from May 16, 2007 through March 14, 2008.

On the subject buses, an incorrect combination of flat washer and serrated nut may have been installed on the bolt that secures the starter cable and engine wiring harness retaining clamp to its attaching bracket at the front of the engine above the engine cooling fan. The presence of the flat washer could prevent the serrated nut from locking against the attaching bracket, and over time, cause the serrated nut to loosen allowing the starter cable and engine wiring harness to fall and contact the engine fan hub while in operation. If the starter cable or engine wiring harness contacts the engine fan hub while the fan is in operation, the cable and/or harness covering may abrade which could result in a direct short. A direct short could potentially result in a vehicle fire.

Blue Bird is conducting a recall to correct this defect. Buses with this defect must be modified according to the enclosed instructions for Recall R10SL.

You may contact your Blue Bird dealer to arrange to have this recall performed. Or, if you prefer, you may perform this recall yourself or have a qualified repair facility convenient to you perform this recall. A qualified technician should perform this recall.

Your Blue Bird bus(es) affected by this recall are identified by body serial number(s) on the enclosed reply sheets. If you no longer own the subject bus(es), please complete the sold to section of the **labor reimbursement** sheet and return to Blue Bird in the enclosed pink postage prepaid envelope.

To receive replacement locknuts and washers to correct this condition, you must return the yellow recall reply sheet to Blue Bird in the pink, self addressed, postage prepaid envelope. Be sure to provide a valid shipping address as UPS does not deliver to P.O. Boxes.

BLUE BIRD BODY COMPANY
P.O. Box 937 – 402 Blue Bird Blvd – Fort Valley, Georgia – (478) 825-2021

Labor time to install new locknuts and flat washers and inspect the routing of the starter cable and engine wiring harness is 0.5 hrs (30 minutes) per bus.

Reimbursement for labor may be obtained by completing the **pink recall request for reimbursement sheet** provided and returning it to Blue Bird in the enclosed **pink** postage prepaid envelope. If reimbursement is not desired, please complete the bottom portion of the pink reply sheet and return to Blue Bird in the enclosed pink reply envelope so we may update our records to show recall R10SL has been completed.

If the modifications directed by this notification were performed on your bus prior to the receipt of this recall notification, complete and sign the recall reply sheet and attached a copy of the work order/invoice. Mail the documents in the **pink** self-addressed postage paid envelope included with the recall notification to Blue Bird for warranty consideration. Reimbursements will be made in accordance with the requirements of the National Highway Transportation Safety Act, Title 49 Code of Federal Regulations, Parts 573 and 577.

Federal law requires that any vehicle lessor receiving this recall notice must forward a copy of this notice to the lessee within ten days.

If Blue Bird Body Company should fail to or is unable to remedy this condition without charge to you, you may contact:

ADMINISTRATOR
NATIONAL HIGHWAY TRAFFIC SAFETY ADMINISTRATION
1200 NEW JERSEY AVENUE, SE
WASHINGTON, D.C. 20590

Or, you may call The National Highway Traffic Safety Administration toll free at:

1-888-327-4236
TTY 1-800-424-9153

Or, go to: HTTP:/WWW.SAFERCAR.GOV

Questions regarding this recall campaign should be directed to me at (478) 822-2242.

Thank you,

Bill Coleman

Bill Coleman
Corporate Recall Administrator
BLUE BIRD CORPORATION

Starter Cable and Wiring Harness May Contact Engine Fan Hub

RECALL

Models Affected: 2007 – 2011 All American (A3FE) and Commercial Series (C3FE), and 2010-2011 All American (D3FE) equipped with Cummins ISB Engines

ISSUE

The ¼" serrated flange head nuts that secures the starter cable and engine wiring harness to the mounting brackets located on the front of the engine may become loose and fall off allowing the cable and harness to contact engine fan drive belt or the fan clutch assembly.

CORRECTIVE ACTION

Replace ¼" serrated head flange nut with a ¼" locking nut, add a flat washer and inspect starter cable and engine wiring harness.

PROCEDURE

WARNING: Always follow all Federal, State, Local and Shop safety standards and use proper safety equipment when performing these procedures. Thoroughly read and understand all instructions before performing this procedure.

CAUTION: Engine MUST be at ambient temperature before performing these procedures.

All American (A3FE and C3FE)

1. Park bus on a level surface, applying parking brake, switch engine off, remove ignition key and chock wheels. Disconnect batteries. ***Always remove negative cable first.***

2. Open engine hood and disconnect hood stop cable from inside cover assembly by removing a ½ x 24 machine screw and 10-24 hex locknut.

Remove machine screw and locknut

3. Locate the two latches on each side and one latch at the rear and release the latches.

4. Remove cover assembly and move it away from the engine to access the front fan area.

R10SL

RECALL CAMPAIGN

5 Inspect the starter cable and wiring harness from the right side of the engine, across front of engine to left side of engine for any chaffing, rubbing or damage. If starter cable and wiring harness shows any evidence of damage, contact Blue Bird Recall Administration.

Area of Left side support Bracket, See photos in step 8

Area of Right side support Bracket, See photo in Step 7

6 One starter cable and wiring harness support is located on the right side of the engine between the alternator and engine fan.

7 Remove and discard the ¼" serrated nut (and flat washer if installed). Install the new ¼" locknut (0145847) and flat washer (01247709) provided. Torque nut to 60-85 in. lbs. Note: two complete threads must extend completely through the nut.

Replace with new locknut and flat washer (Note: new locknut shown)

8. The second starter cable and wiring harness support is located on the front left side of the engine block.

9. Remove and discard the ¼" serrated nut (and flat washer if installed). Install the new ¼" locknut (0145847) and flat washer (01247709) provided. Torque nut to 60-85 in. lbs. Note: two complete threads must extend completely through the nut.

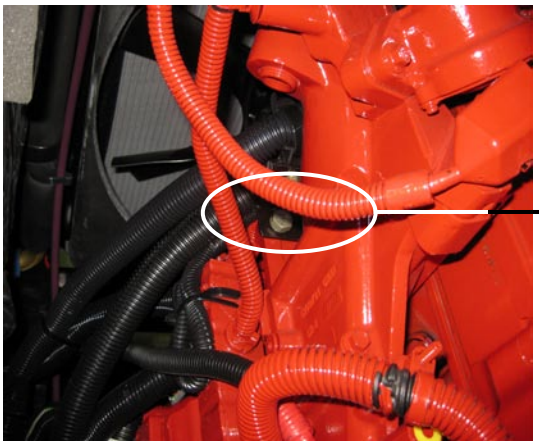

Left Side support

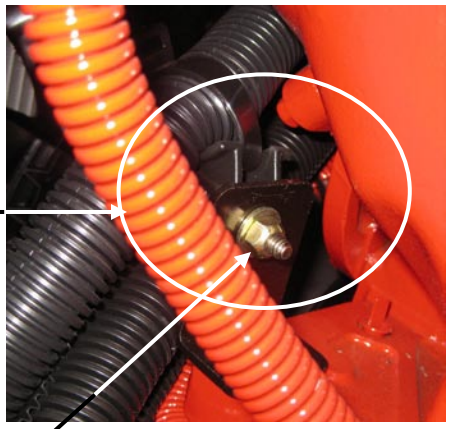

Replace with new locknut and flat washer (Note: New locknut shown)

10. Reinstall the engine cover assembly with the latches. After the latches have been snapped in place, reattach the cable on the inside cover assembly with ½ x 24 machine screw and 10-24 hex locknut removed in earlier step. Reconnect the batteries.

    Caution: When reconnecting the batteries, connect the negative last.

11. Place bus back in service.

All American (D3FE)

1. Park bus on a level surface, applying parking brake, switch engine off, remove ignition key and chock wheels. Disconnect batteries. ***Always remove negative cable first.***

2. To remove engine cover assembly to access front of engine:
    a. Remove cup holder by removing the Phillip head screws on the front of center console.
    b. Remove the PA microphone if equipped.
    c. Pull to release the rubber handle latch anchor located at the right hand lower front wall of the engine cover assembly.
    d. Open hood and locate the four latches on the inside of hood. One is located on the driver's side toward the front, one on each side and one at rear center. Release these latches and remove engine cover assembly for access to front of engine.

3. Inspect the starter cable and wiring harness from the right side of engine, across front of engine to left side of engine for any chaffing, rubbing or damage. If starter cable and wiring harness shows any evidence of damage, contact Blue Bird Recall Administration.

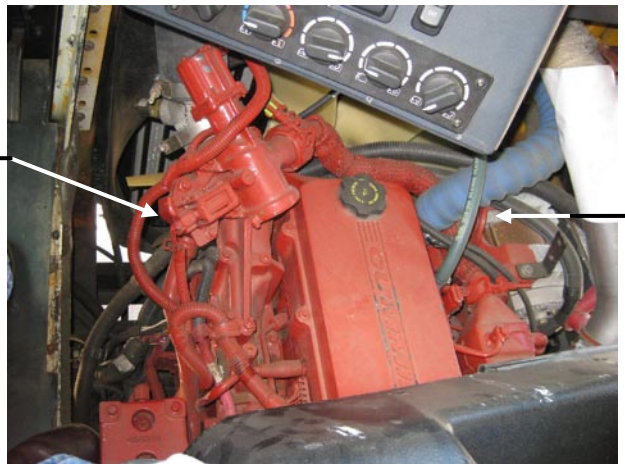

4 One starter cable and wiring harness support is located on the right side of the engine between the alternator and engine fan.

5. Remove and discard the ¼" serrated nut (and flat washer if installed). Install the new ¼" locknut (0145847) and flat washer (01247709) provided. Torque nut to 60-85 in. lbs. Note: two complete threads must extend completely through the nut.

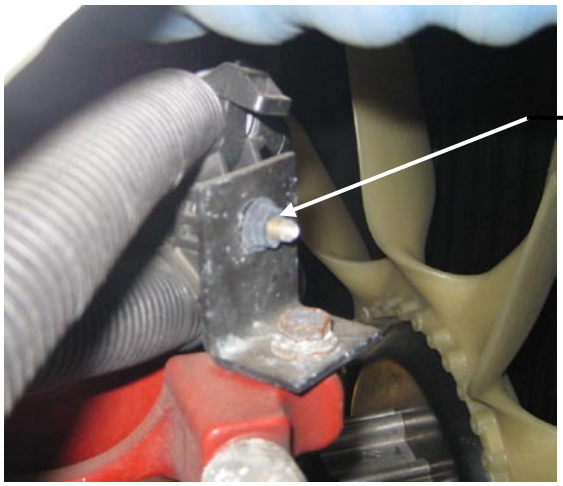

6. The second starter cable and wiring harness support is located on the front left side of the engine block.

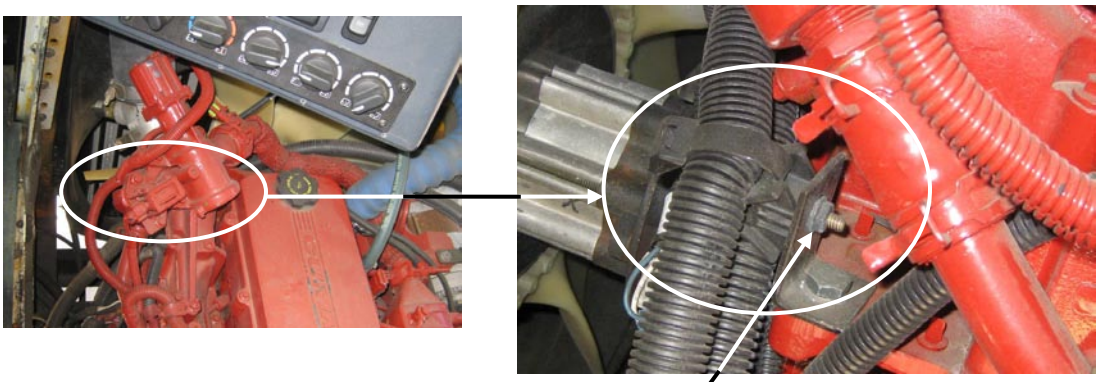

Left Side Support

Replace serrated nut (shown) with locknut and flat washer

7 Remove and discard the ¼" serrated nut (and flat washer if installed). Install the new ¼" locknut (0145847) and flat washer (01247709) provided. Torque nut to 60-85 in. lbs. Note: two complete threads must extend completely through the nut.

8. Reinstall the engine cover assembly by reversing the steps above. Reconnect the batteries.

Caution: When reconnecting the batteries, connect the negative cable last.

9. Place bus back in service.

PARTS LIST

PART NUMBER	DESCRIPTION	QUANITY
01455947	Nut, Hex Head, ¼ -20, Locking, Nylon Insert	2
01247709	Washer, Flat, 17/64 ID X 5/8 OD	2

BLUE BIRD

R11SZ

DATE: **JUNE 23, 2011**

TO: **U.S. DEALERS**

SUBJECT: **RECALL R11SZ** **BRAKE ABS MALFUNCTION INDICATOR LIGHT NONCOMPLIANCE**

This notice is sent to you in accordance with the requirements of the National Traffic and Motor Vehicle Safety Act.

Blue Bird Body Company has decided that certain 2007 through 2011 model year "Vision" conventional model school buses manufactured from October 23, 2006 through December 09, 2009 fail to conform to the requirements of Federal Motor Vehicle Safety Standard (FMVSS) 105 "Hydraulic and Electric Brake Systems" Section 5.3.1for buses equipped with hydraulic brakes and (FMVSS) 121 "Air Brake Systems" Section 5.1.6.2 for buses equipped with air brakes.

On the subject buses, the dash instrument panel ABS malfunction indicator light does not illuminate when the main ABS module is disconnected. In the event the ABS circuit is disconnected from the main ABS module, the bus operator would be unaware of the failure of the ABS braking system and the associated nonfunctioning ABS braking which could increase the risk of a crash in certain circumstances and could potentially result in property damage and/or personal injury.

On buses manufactured with hydraulic brakes and equipped with the cab mounted (behind the PDU cover) "D" version of the Wabco hydraulic brake ABS module the main wiring circuit must be rewired. Buses with Type "D" Wabco ABS modules were manufactured from November 02, 2006 through December 17, 2008. See attached R11SZ instructions modification procedures for buses equipped with Type "D" ABS modules.

Note: The instrument panel on buses equipped with Type "D" Wabco ABS modules **will not** need to be reprogrammed.

All other buses subject to Recall R11SZ will require the Dealer to reprogram the Stoneridge instrument panel with the appropriate software as required. The software for reprogramming the dash will be available on the Blue Bird Customer Service website within the next 30 days. See attached R11SZ instructions for Stoneridge instrument panel reprogramming procedures. **Owners are being directed to contact their dealer to have Recall R11SZ performed.**

BLUE BIRD BODY COMPANY
P.O. Box 937 – 402 Blue Bird Blvd – Fort Valley, Georgia – (478) 825-2021

Labor time to rewire the type "D" ABS module on subject buses equipped with hydraulic brakes and manufactured from November 02, 2006 through December 17, 2008 is 0.2 hours per bus.

Labor time to install the appropriate software on all other buses is 0.2 hours per bus.

Dealers may submit campaign claims in Blue Bird iWarranty. **Claims for buses with Type D Wabco ECUs will be filed under campaign "R11SZ Type D" in iWarranty.**

If our records indicate affected buses were delivered in your service area, a printout identifying affected buses is enclosed. **Dealers should verify correct owners and assure that complete mailing addresses are provided for each listed vehicle.**

If you have in your possession or have sold a bus that was purchased from another dealer that may be affected by this recall, please notify me at 478-822-2242.

Federal law requires that any vehicle lessor receiving this recall notice must forward a copy of this notice to the lessee within ten days.

Dealers are reminded of their responsibilities under section 154 of The National Traffic and Motor Vehicle Safety Act of 1991. Dealers are required to complete modifications on units in their inventory before delivering to the final owner. Reference Blue Bird Body Company Distributor Memo No. 42-92.

Questions regarding this recall campaign should be directed to me at (478) 822-2242.

Thank you,

Bill Coleman

Bill Coleman
Corporate Recall Administrator
Blue Bird Corporation

BLUE BIRD

R11SZ

June 23, 2011

Dear Blue Bird Owner:

This notice is sent to you in accordance with the requirements of the National Traffic and Motor Vehicle Safety Act.

Blue Bird Body Company has decided that certain 2007 through 2011 model year "Vision" model conventional school and non-school buses manufactured from October 23, 2006 through December 09, 2009 fail to conform to Federal Motor Vehicle Safety Standard (FMVSS No. 105) "Hydraulic and Electric Brake Systems" for buses equipped with hydraulic brakes and (FMVSS No. 121) "Air Brake System" for buses equipped with air brakes.

On the subject buses, the dash instrument panel ABS malfunction indicator light does not illuminate when the ABS circuit is disconnected at the main ABS module. In the event the ABS circuit is disconnected from the main ABS module, the bus operator would be unaware of the failure of the ABS braking system and the associated nonfunctioning ABS braking, which could increase the risk of a crash in certain circumstances and could potentially result in property damage and/or personal injury. Parts and labor required to complete Recall R11SZ will be provided at no cost to you.

Your Blue Bird bus(es) affected by this recall are identified by body serial number(s) on the enclosed cover sheet(s). The cover sheets will indicate the type of ABS module installed on the buses listed.

If you no longer own the subject bus(es), please complete the appropriate section of the cover sheet and return to Blue Bird in the enclosed pink postage prepaid envelope.

If your bus is equipped with hydraulic brakes and was manufactured between November 02, 2006 and December 17, 2008 and equipped with the Wabco Type "D" ABS module you will need to have the ABS module wiring circuit only modified according to the attached recall instructions. These buses will not need to be reprogrammed. You may contact your Blue Bird dealer to have this modification performed or you may perform this modification yourself. You may also have this modification performed by a reputable local repair facility convenient to you. A qualified technician must perform the wiring circuit modification.

Reimbursement for labor for performing the wiring modification on the Wabco Type D ECU may be obtained by completing the **"Completed Reply/Labor Reimbursement"** sheet provided and returning it to Blue Bird in the enclosed **pink** postage prepaid envelope.

BLUE BIRD BODY COMPANY
P.O. Box 937 – 402 Blue Bird Blvd – Fort Valley, Georgia – (478) 825-2021

If your bus is equipped with air brakes or equipped with hydraulic brakes **and not** manufactured within the dates for buses equipped with Wabco Type D ECU's, you will need to schedule an appointment with your dealer to have the dash instrument panel reprogrammed. Your Blue Bird dealer must perform the software update. The software needed to correct this condition on these buses is anticipated to be available to your Blue Bird dealer within the next 30 days. Reprogramming the dash instrument panel will be performed by your Blue Bird dealer at no charge to you. A qualified technician must perform the software update.

If the modifications directed by this notification were performed on your bus prior to the receipt of this recall notification, complete and sign the recall reply sheet and attached a copy of the work order/invoice. Mail the documents in the **pink** self-addressed postage paid envelope included with the recall notification to Blue Bird for warranty consideration. Reimbursements will be made in accordance with the requirements of the National Highway Transportation Safety Act, Title 49 Code of Federal Regulations, Parts 573 and 577.

Federal law requires that any vehicle lessor receiving this recall notice must forward a copy of this notice to the lessee within ten days.

If Blue Bird Body Company should fail to or is unable to remedy this condition without charge to you, you may contact:

ADMINISTRATOR
NATIONAL HIGHWAY TRAFFIC SAFETY ADMINISTRATION
1200 NEW JERSEY AVENUE, SE
WASHINGTON, D.C. 20590

Or, you may call The National Highway Traffic Safety Administration toll free at:

1-888-327-4236
TTY 1-800-424-9153

Or, go to: HTTP:/WWW.SAFERCAR.GOV

Questions regarding this recall campaign should be directed to me at (478) 822-2242.

Thank you,

Bill Coleman

Bill Coleman
Corporate Recall Administrator
Blue Bird Corporation

Stoneridge Instrument Cluster ABS Malfunction Indicator Noncompliance RECALL

Models Affected: 2007-2011 Model Year "Vision" Buses

ISSUE

Under certain conditions the anti-lock brake (ABS) malfunction indicator may not illuminate when required.

CORRECTIVE ACTION

Affected units will require corrective action based on instrumentation software version and ABS control module type. Complete the appropriate corrective action procedure below.

SOFTWARE UPDATE PROCEDURE

WARNING: Always follow all Federal, State, Local, and Shop safety standards and use proper safety equipment when performing these procedures. NOTE: Software update procedure is NOT applicable to buses with cab mounted "D" version ABS ECU's.

Step 1. Set the bus parking brake.

Step 2. Using steering column stalk switch and instrument cluster diagnostics menu verify current software version displayed under part number menu.

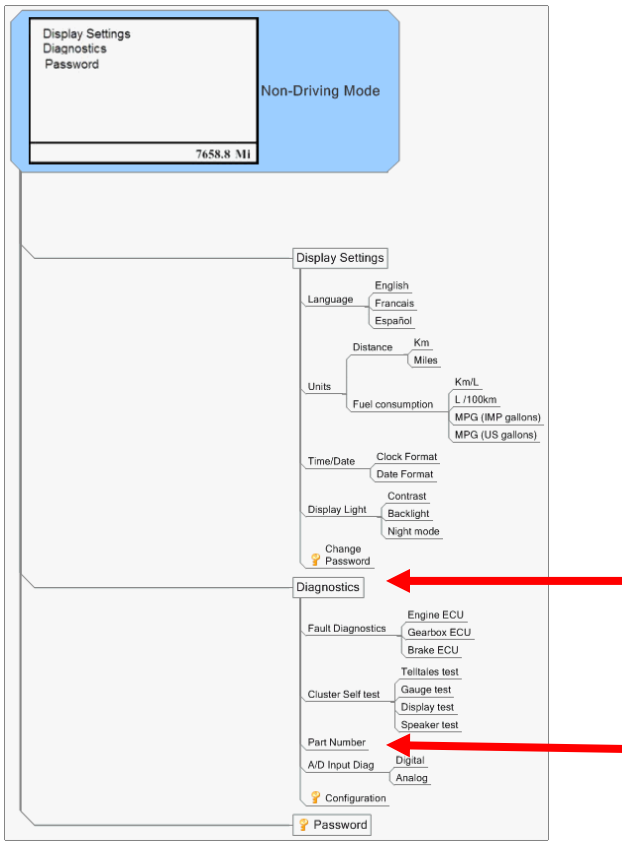

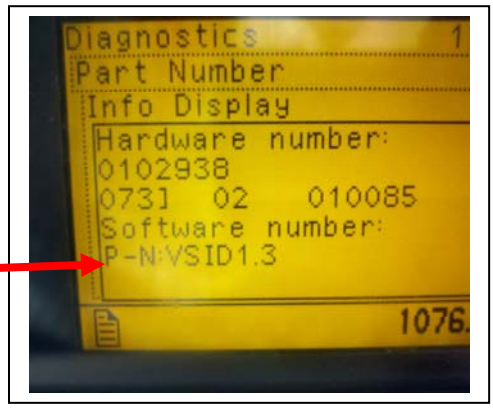

R11SZ

RECALL CAMPAIGN

Step 3. On units with version 1.4 or lower software installed flash the instrument cluster with version 4.11 software provided. On units with version 1.5 or higher installed flash the instrument cluster with version 4.1 software provided.

Step 4. Connect Kvaser CAN interface cables (supplied in kit 00114694) to the computers USB port and the Bus diagnostic connector located below the driver side dash area.

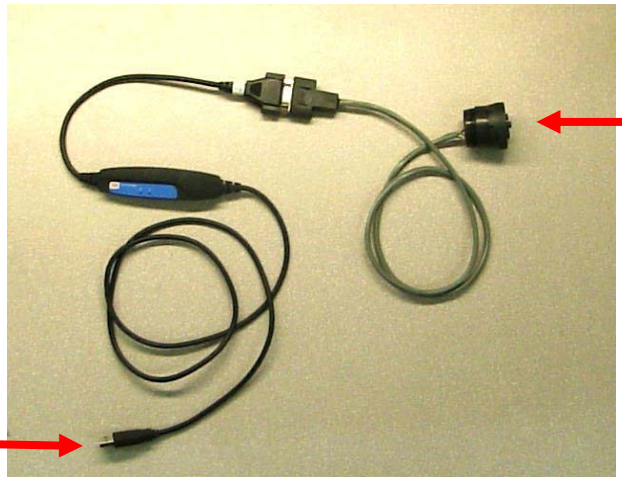

Step 5. Once everything is connected, turn ignition switch on.

Step 6. Run the Flash Tool application by double clicking the Flash Tool icon on your desktop.

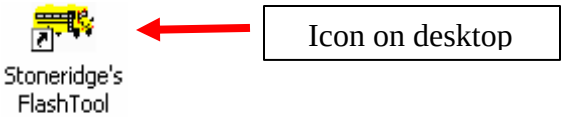

Step 7. You will see the following screen (main window):

Step 8. Click on “Open Hex File…” button

a. Select the appropriate software version hex file supplied.

Step 9. Click on “Flash!” button

a. A confirmation window will appear, click on “Flash!” button

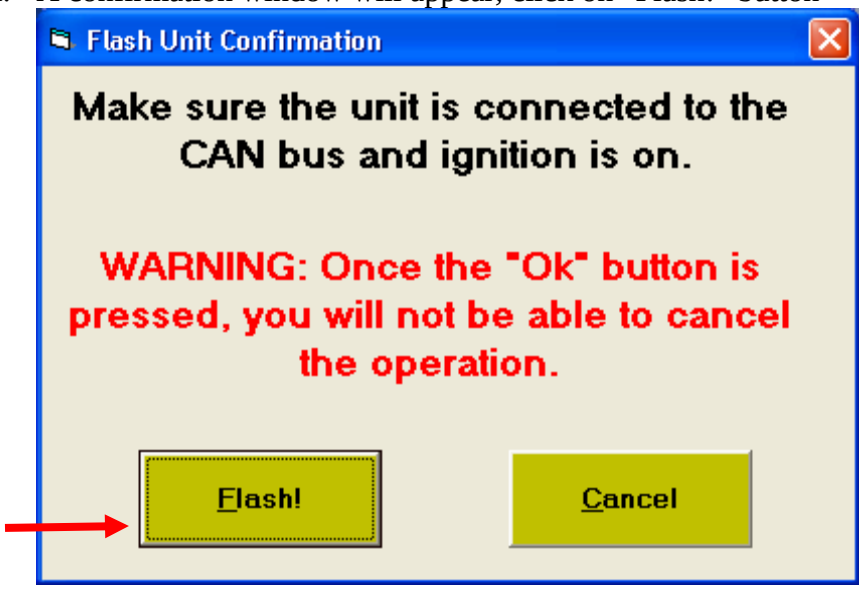

Step 10. Wait for the cluster unit to automatically restart. Once the flash process has started there is no way to abort. The status screen will display “passed Operation successful!” when process is complete. DO NOT switch ignition off while in process.

Step 11. Using steering column stalk switch and instrument cluster diagnostics menu verify software version displayed under part number menu is updated version level you installed.

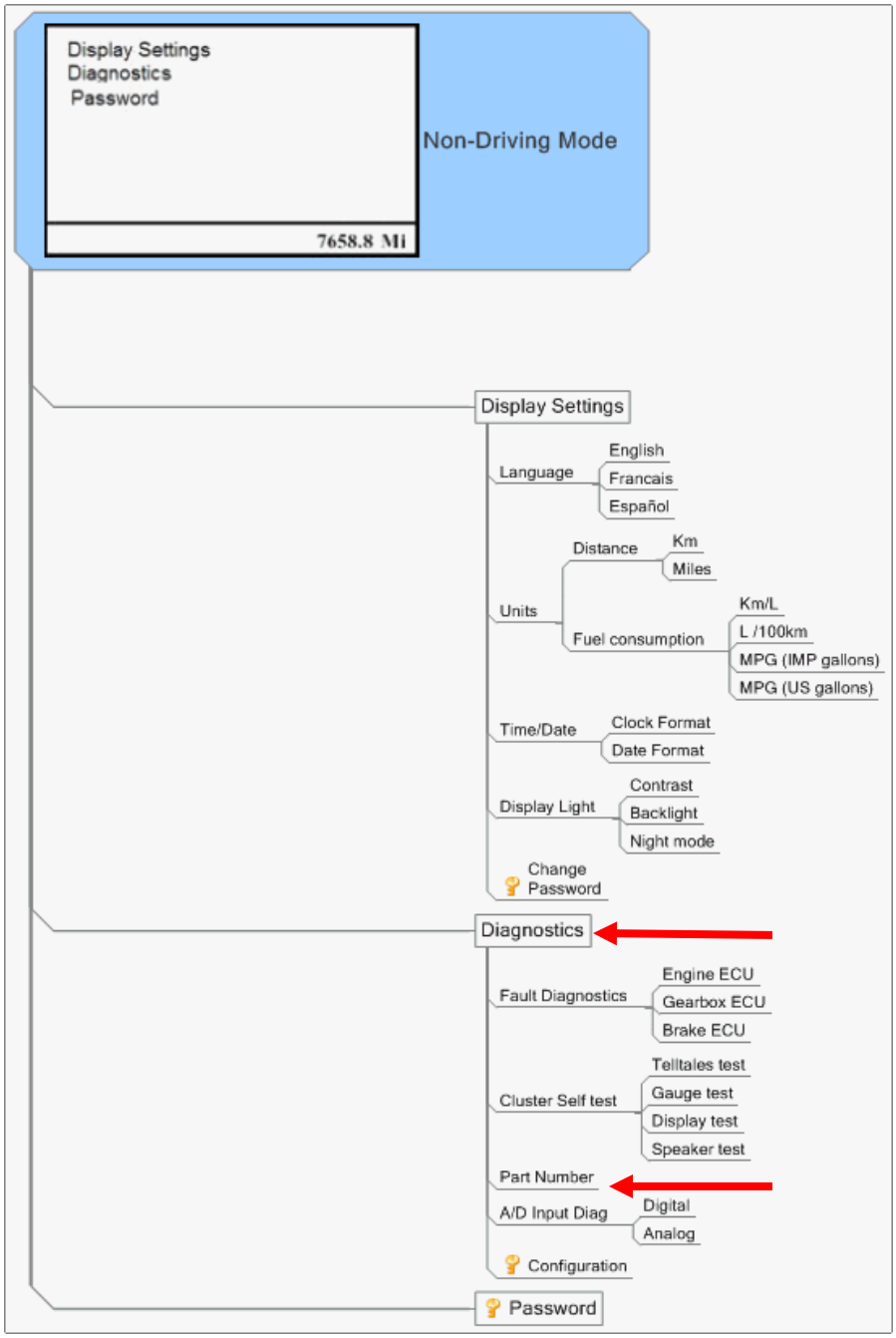

Step 12. Using steering column stalk switch and instrument cluster configuration menu verify the “ABS WL Source” is set for “J1939”. Access to the configuration option is protected and requires the user to provide the access code via the “**Password”** option to enable it. Enter the password “2290” first. It is necessary to execute an ignition cycle (OFF/ON), after revising desired parameters, for EE parameter changes to take effect.

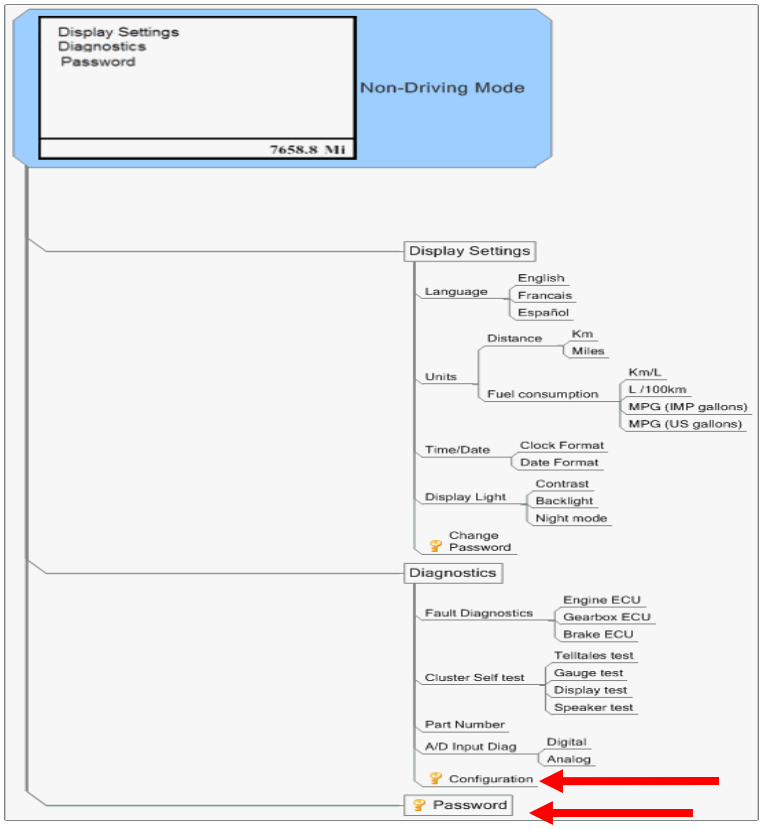

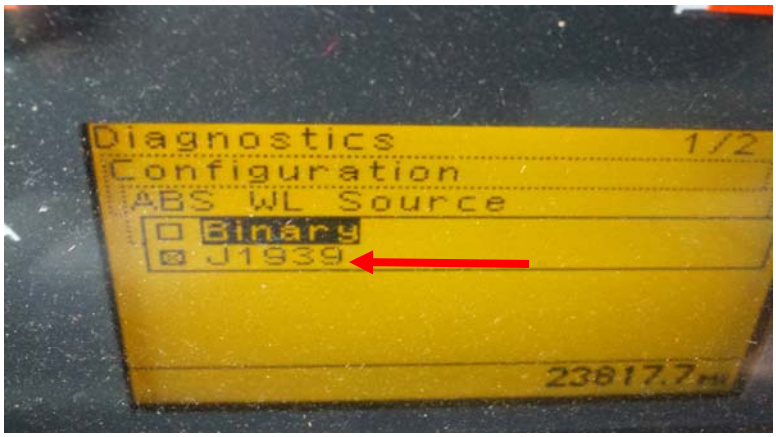

Step 13. Instrument cluster software update is complete.

WIRING UPDATE PROCEDURE

WARNING: Always follow all Federal, State, And Local and Shop safety standards and use proper safety equipment when performing these procedures. Observe all safety precautions to secure the bus from rolling. NOTE: Wiring update procedure is ONLY applicable to buses with cab mounted "D" version ABS ECU's.

1. Park the bus on a level surface, apply parking brakes, turn off engine and remove keys. Chock wheels.
2. Disconnect batteries – Note; When disconnecting the batteries, remove the negative cable first.
3. Remove chassis Power Distribution Unit (PDU) cover by unscrewing two thumb screws. The thumb screws are located at the top of each side of the cover.

Thumb screws. Cover is located lower center of dash.

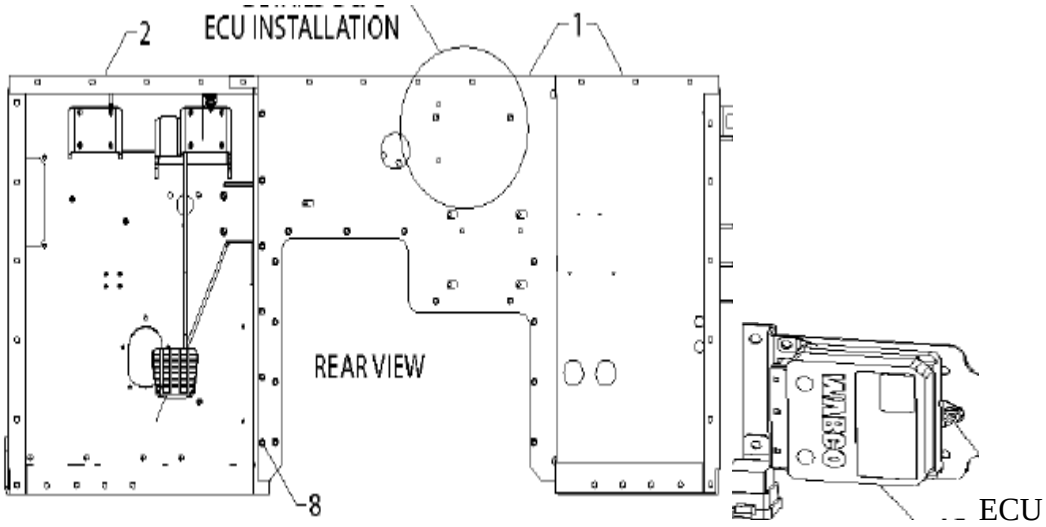

WIRING UPDATE PROCEDURE

4. Locate connector C504 in PDU (detail shown below). Cut and remove connector C504 from the PDU and ABS harness.

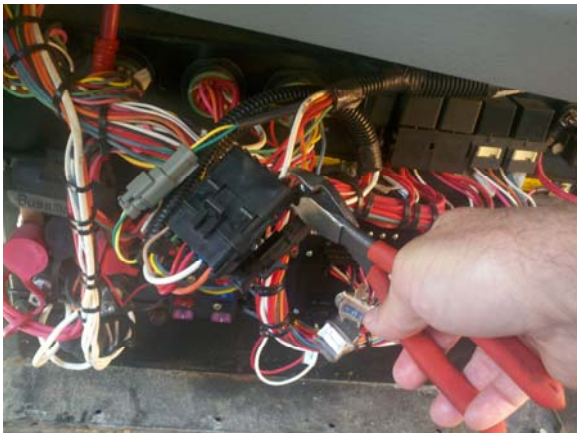

5. Splice each circuit from previous step to the corresponding circuit. Use appropriate terminal as listed below.

   "ABS LGT", "ABS ACTIVE", circuit use terminal # 00005840.
   "ABS GND", "ABS BATT", "MOD PUMP BATT", circuit use terminal # 0036508.
   "ABS IGN" circuit use terminal # 00036507.

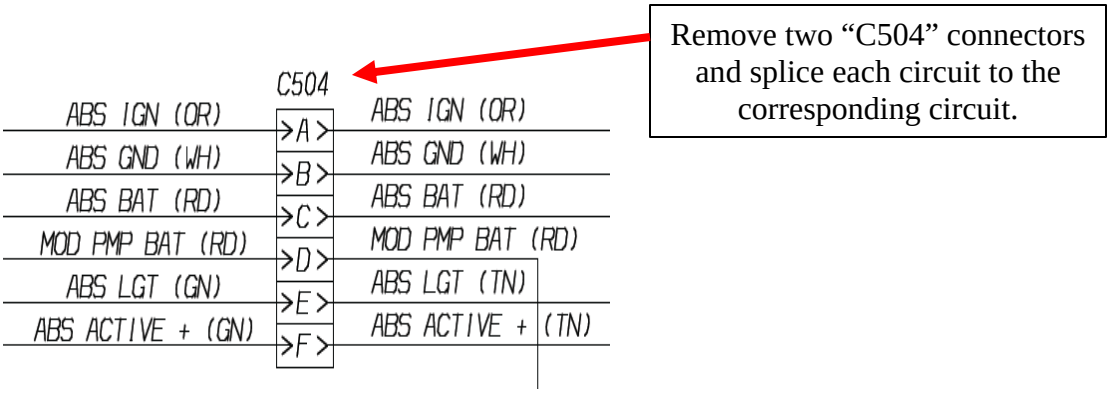

6. Wiring update procedure is complete.

PARTS

PART NUMBER	QUANTITY	DESCRIPTION
000036507	1	Terminal, Butt Conn, 14-16 GA, Sealed
000036508	3	Terminal, Butt Conn, 10-12 GA, Sealed
000005840	2	Terminal, Butt Conn, 18-22 GA, Sealed

TOOLS

PART NUMBER	DESCRIPTION
00114694	Kit, Service, Diagnostic Tool, Stoneridge

BLUE BIRD

R09PM

DATE: **JANUARY 11, 2010**

TO: **U.S. DEALERS**

SUBJECT: **RECALL R09PM** **OFFSET LEG BARRIER PAD AND 2/3 PASSENGER SEAT BACK PAD NONCOMPLIANCE**

This notice is sent to you in accordance with the requirements of The National Traffic and Motor Vehicle Safety Act.

Blue Bird Corporation has decided that certain school buses identified below by model year and model, may fail to conform to the requirements of Federal Motor Vehicle Safety Standard No. 222, "School Bus Passenger Seating and Crash Protection".

> 2008 through 2010 model year Blue Bird "Micro Bird" school buses manufactured from August 28, 2007 through May 07, 2009 and equipped with offset leg barriers.
>
> 2004 through 2010 model year "Vision" school buses manufactured from January 30, 2003 through May 07, 2009 and equipped with offset leg barriers and 2/3 passenger seats.
>
> 2004 through 2010 model year All American school buses manufactured from January 30, 2003 through May 07, 2009 and equipped with offset leg barriers and 2/3 passenger seats.
>
> 2004 through 2010 model year conventional school buses manufactured from February 01, 2003 through May 24, 2007 and equipped with offset leg barriers and 2/3 passenger seats.

The offset leg barrier frame pad and the 2/3 seat back pad on the subject buses may have been installed incorrectly or an incorrect pad may have been installed which could result in personal injury in the event of a vehicle crash. Blue Bird is conducting a recall to correct this condition. The subject buses must be modified according to the enclosed instructions for Recall R09PM.

If our records indicate buses subject to this recall were delivered in your service area, a printout identifying affected buses is enclosed. **Dealers should verify correct owners and assure that complete mailing and shipping addresses are provided for each listed owner.**

BLUE BIRD CORPORATION
P.O. Box 937 • Fort Valley, Georgia 31030
Phone: (478) 825-2021

If you have in your possession or have sold a bus that was purchased from another dealer that may be affected by this recall, please notify me at 478-822-2242.

Blue Bird is unsure of the quantity of offset leg barrier pads and 2/3 seatback pads that will actually need to be replaced. Therefore, a limited number of parts for Recall R09PM are on order at this time. Parts are only to be ordered based on dealer/owner inspection results.

For recall R09PM Dealers and owners must order replacement barrier pads and 2/3 seat back pads as needed through Recall Administration. Parts orders for R09PM will be drop shipped directly to the dealers/owners from the pad manufacturer.

Allowed labor times for performing Recall R09PM are listed below:

Labor time to inspect 1 pad is 0.1hr.
Labor time to inspect and repair 1 pad is 0.6hrs.
Labor time to inspect and repair 2 pads is 1.2hrs.
Labor time to inspect and repair 3 pads is 1.8hrs.

Warranty applications may be submitted to Blue Bird iWarranty (Campaigns/Claims).

Federal law requires that any vehicle lessor receiving this recall notice must forward a copy of this notice to the lessee within ten days.

Dealers are reminded of their responsibilities under section 154 of The National Traffic and Motor Vehicle Safety Act of 1991. Dealers are required to complete modifications on units in their inventory before delivering to the final owner. Reference Blue Bird Body Company Distributor Memo No. 42-92.

Questions regarding this recall campaign should be directed to me at (478) 822-2242.

Thank you,

Bill Coleman

Bill Coleman
Corporate Recall Administrator
Blue Bird Corporation

BLUE BIRD

R09PM

January 11, 2010

Dear Blue Bird Owner:

This notice is sent to you in accordance with the requirements of The National Traffic and Motor Vehicle Safety Act.

Blue Bird Corporation has decided that certain school buses identified below by model year and model, may fail to conform to the requirements of Federal Motor Vehicle Safety Standard No. 222, "School Bus Passenger Seating and Crash Protection".

> 2008 through 2010 model year Blue Bird "Micro Bird" school buses manufactured from August 28, 2007 through May 07, 2009 and equipped with offset leg barriers.
>
> 2004 through 2010 model year "Vision" school buses manufactured from January 30, 2003 through May 07, 2009 and equipped with offset leg barriers and 2/3 passenger seats.
>
> 2004 through 2010 model year All American school buses manufactured from January 30, 2003 through May 07, 2009 and equipped with offset leg barriers and 2/3 passenger seats.
>
> 2004 through 2010 model year conventional school buses manufactured from February 01, 2003 through May 24, 2007 and equipped with offset leg barriers and 2/3 passenger seats.

The offset leg barrier frame pad and the 2/3 seat back pad on the subject buses may have been installed incorrectly or an incorrect pad may have been installed which could result in personal injury in the event of a vehicle crash. Blue Bird is conducting a recall to correct this condition. The subject buses must be modified according to the enclosed instructions for Recall R09PM.

Your Blue Bird bus(es) affected by this recall are identified by body serial number(s) on the enclosed reply sheets. If you no longer own the subject bus(es), please complete the appropriate section of the **yellow** reply sheet and return to Blue Bird in the enclosed pink postage prepaid envelope.

To receive parts required to correct this condition, you must inspect each barrier pad and and each 2/3 seat back pad according to the attached instructions, record your findings on the enclosed "R09PM Recall Inspection" sheet, sign and return to Blue Bird in the pink self addressed postage prepaid envelope. Replacement pads, if needed, will be shipped "No Charge" to you.

BLUE BIRD CORPORATION
P.O. Box 937 • Fort Valley, Georgia 31030
Phone: (478) 825-2021

You may contact your Blue Bird dealer to arrange to have this recall performed. Or, if you prefer, you may perform this recall yourself or have a qualified repair facility convenient to you perform this recall. A qualified technician should perform this recall.

Allowed labor times for performing Recall R09PM are listed below:

Labor time to inspect 1 pad is 0.1 hr.
Labor time to inspect and repair 1 pad is 0.6 hrs.
Labor time to inspect and repair 2 pads is 1.2 hrs.
Labor time to inspect and repair 3 pads is 1.8 hrs.

Reimbursement for labor may be obtained by completing the **pink** request for reimbursement sheet provided and returning it to Blue Bird in the enclosed **pink** postage prepaid envelope.

If the modifications directed by this notification were performed on your bus prior to the receipt of this recall notification, complete and sign the recall reply sheet and attach a copy of the work order/invoice. Mail the documents in the **pink** self-addressed postage paid envelope included with the recall notification to Blue Bird for warranty consideration. Reimbursements will be made in accordance with the requirements of the National Highway Transportation Safety Act, Title 49 Code of Federal Regulations, Parts 573 and 577.

Federal law requires that any vehicle lessor receiving this recall notice must forward a copy of this notice to the lessee within ten days.

If Blue Bird Body Company should fail to or is unable to remedy this condition without charge to you, you may contact:

ADMINISTRATOR
NATIONAL HIGHWAY TRAFFIC SAFETY ADMINISTRATION
1200 NEW JERSEY AVENUE, SE
WASHINGTON, D.C. 20590

Or, you may call The National Highway Traffic Safety Administration toll free at:

1-888-327-4236
TTY 1-800-424-9153

Or, go to: HTTP:/WWW.SAFERCAR.GOV

Questions regarding this recall campaign should be directed to me at (478) 822-2242.

Thank you,

Bill Coleman

Bill Coleman
Corporate Recall Administrator
BLUE BIRD CORPORATION

Table of Contents

Recall R09PM Inspection Sheet

Body Number	Date Inspected	Drivers Side Barrier		Curb Side Barrier		2/3 Seat Back Pad	
		Good	Replace	Good	Replace	Good	Replace

Ship Replacement Pad(s) to:

School or Company Name

Street Address (No P.O. boxes)

City, State, ZIP

Date Telephone

Signature

Offset Leg Barrier & 2/3 Seat Back Pads

RECALL

MODELS AFFECTED: *School Bus Models Equipped with Offset Leg Barriers and/or 2/3 Seats, Built January 30, 2003 and Later and Delivered May 06, 2009 and Earlier*

R09PM

RECALL CAMPAIGN

ISSUE

On some affected buses, Barriers and/or 2/3 Seats with offset floor-mounted supports may have incorrect foam pad assemblies installed, resulting in a noncompliance with FMVSS 222 S5.3.2 Leg Protection Zone.

CORRECTIVE ACTION

This procedure describes the necessary inspection to determine if incorrect pad is installed, and replacement of incorrect pads.

PROCEDURE

WARNING ***Always follow all federal, state, local, and shop safety standards and use proper safety equipment when performing this procedure.***

1 Thoroughly study and understand the following details of this issue before performing inspections:

- Barrier and Seat Back Pads Construction. The Pads are generally assembled from several pieces of two different types of foam material:
  - Non-rigid ("spongy") foam forms the majority of the Pads.
  - Rigid expanded polystyrene ("styrofoam-like") boards are used to cover frame members in certain "collision impact zone" areas.

Once familiar with the construction, the edges between the two types of foam are easy to distinguish by feeling along the installed seat back or barrier cover, as will be described in Step 2.

- Correct Pads For Barrier and 2/3 Seat Backs. The offset support legs of Seat Barriers and 2/3 Seat Assemblies extend vertically inside the back frame. These vertical frame members are required to be covered by the rigid foam components of the Pad Assembly.
- Incorrect Pads For Barrier and 2/3 Seat Backs. If a Pad Assembly for a regular full-width seat is installed on a Barrier, or on a 2/3 Seat Back, the vertical extension of the support legs are not sufficiently covered by the rigid foam type.

INCORRECT
Pad for regular seat installed

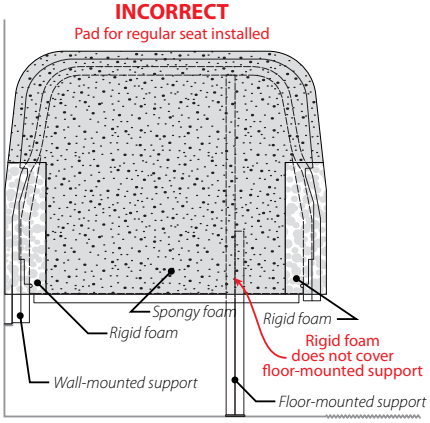

INCORRECT
Pad for opposite side Barrier or 2/3 Seat installed

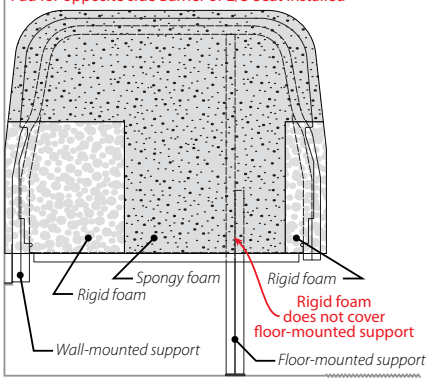

CORRECT

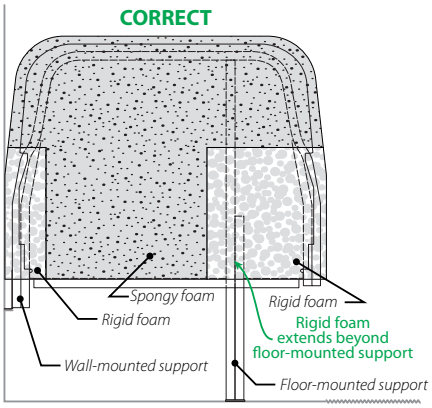

2 Inspect each Left and Right Offset Leg Barrier and each 2/3 Seat Assembly to ensure the correct Pad Assembly is installed:

2.1 On the rear side of the Barrier or Seat Assembly back, starting at aisle-side lower corner, press a hand near the bottom edge and move slowly toward the middle of the back. A change in softness can be easily felt where the rigid foam ends and the spongy foam begins. Mark this location, and compare it to the location of the offset leg portion of the frame.

The edge of the rigid foam inside the cover of a Barrier or a 2/3 Seat extends beyond the vertical support leg, which is offset from the aisle-side of the seat.

The pad of a regular seat back also has rigid foam pieces, but they do not extend as far from the aisle-side of the seat, because the vertical support leg is not offset.

2.2 If the location of the end of the rigid foam cannot be clearly determined by the above-described method, remove the metal trim from the bottom of the back cover and inspect visually.

2.3 Note your findings on the Recall Inspection Sheet, provided, and inspect the next Barrier or 2/3 Seat until all of those on the bus are inspected. For each:

- If the rigid foam spans beyond the offset leg, the correct Pad Assembly is installed, and no rework is required.
- If the rigid foam does not extend beyond the offset leg, an incorrect Pad Assembly is installed, and must be replaced with a correct Pad Assembly. Proceed to Step 3 to perform the Pad replacement on a Barrier Assembly. Proceed to Step 4 to perform the Pad replacement on a 2/3 Seat Assembly.

2.4 Return the completed Recall Inspection Sheet to Blue Bird per the Recall instructions.

3 Pad Replacement For an Offset Leg Barrier Assembly:

WARNING ***Barrier pad must be installed correctly to comply with FMVSS 222 S5.3.2 Leg Protection Zone.***

3.1 If the Barrier is a right-side Barrier, behind the entrance door stepwell, remove the handrail on the entrance door side.

3.2 Remove the metal trim along the bottom of the back cover, and the lower panel (if so equipped).

3.3 Carefully remove the staples that atach the cover to the frame along the bottom edge, taking care not to damage the Cover.

3.4 Remove the Cover and retain it for reinstallation.

3.5 Remove and discard the incorrect Pad Assembly.

3.6 Install a new Pad Assembly, with the the rigid foam sections toward the rear of the bus.

3.7 Reinstall the Cover. Pull the Cover tightly and staple to the wood strip along the bottom edge.

3.8 Reinstall all trim, panels, or handrails that were removed in Step 3.2, using the original fasteners.

4 Pad Replacement For a 2/3 Seat Assembly:

WARNING ***The 2/3 Seat Pad Assembly must be installed correctly to comply with FMVSS 222 S5.3.2 Leg Protection Zone.***

4.1 Remove the metal trim along the bottom of the back cover, and the lower panel.

4.2 Carefully remove the staples that atach the cover to the frame along the bottom edge, taking care not to damage the Cover.

4.3 Remove the Cover and retain it for reinstallation.

4.4 Remove and discard the incorrect Pad Assembly.

4.5 Install a new Pad Assembly, with the the rigid foam sections toward the rear of the bus.

4.6 Reinstall the Cover. Pull the Cover tightly and staple to the wood strip along the bottom edge.

4.7 Reinstall the trim that was removed in Step 4.1, using the original fasteners.

PARTS

PART NUMBER	QUANTITY	DESCRIPTION
00005525	As Required	PAD,BARRIER, 36.00, GM, LH, OFFSET LEG
00005526	As Required	PAD,BARRIER,36.00, GM, RH, OFFSET LEG
00005527	As Required	PAD, BARRIER, 36.00, HI-BACK, LH, OFFSET LEG
00005528	As Required	PAD, BARRIER, 36.00, HI-BACK, RH, OFFSET LEG
00005531	As Required	PAD, BARRIER, 39.00, HI-BACK, LH, OFFSET LEG
00005532	As Required	PAD, BARRIER, 45.00, HI-BACK, LH, OFFSET LEG
00005533	As Required	PAD, BARRIER, 39.00, HI-BACK, RH, OFFSET LEG
00005534	As Required	PAD, BARRIER, 39.00, GM, LH, OFFSET LEG
00005535	As Required	PAD, BARRIER, 39.00, GM, RH, OFFSET LEG
00005536	As Required	PAD, BARRIER, 45.00, GM, LH, OFFSET LEG
00928416	As Required	PAD, SEAT BACK, 2/3, RH
00949057	As Required	PAD, SEAT BACK, 2/3, LH, 39, SBTF
00114324	As Required	PAD, SEAT, HIGH BACK, 2/3, 30-39, RH
00114323	As Required	PAD, SEAT, HIGH BACK, 2/3, 30-39, LH

BLUE BIRD

AUGUST 13, 2008

TO: **NORTH AMERICAN DEALERS**

SUBJECT: **SERVICE BULLETIN S08NL AUXILIARY FAN INSPECTION**

MODELS AFFECTED: **2009 MODEL YEAR ALL AMERICAN, MICRO BIRD AND VISION**

The auxiliary fan ball seat may disengage from the base allowing the fan motor to separate from the base. The auxiliary fans on the subject buses should be inspected and, if necessary, replaced according to Service Bulletin S08NL.

Labor time allowed to inspect the fan ball socket is 0.1 hour **per bus**. A form is provided for dealers or owners to submit by fax or email directly to DCM to order replacement fans when needed. Labor time allowed to replace fans with defective ball sockets is 0.2 hours **per fan**.

Claims for labor (if any) to perform Service Bulletin S08NL may be submitted by dealers, if modifications are performed within one (1) year of date of issue of this bulletin. Use the create Campaign/Bulletin Claim form Function on BBOND Claim Trac to submit claims. Service Bulletin S08NL expires one (1) year from date of issue.

A printout of your buses affected by Service Bulletin S08NL is attached.

Service Bulletin S08NL is being mailed directly to owners. Owners are being advised to contact their dealer for assistance, if needed.

Questions regarding Service Bulletin S08NL should be directed to your Blue Bird Service Representative.

Sincerely,

Bill Coleman

Bill Coleman
Blue Bird Corporation
478-822-2242
bill.coleman@blue-bird.com

BLUE BIRD

August 13, 2008

Dear Blue Bird Owner,

You will find enclosed a copy of Service Bulletin S08NL regarding the auxiliary fan(s) installed on 2009 model year Blue Bird All American, Micro-Bird or "Vision" buses.

The auxiliary fan ball seat may disengage from the fan motor assembly allowing the fan motor to drop down. The auxiliary fan(s) on your affected buses should be inspected according to Service Bulletin S08NL.

If fans with defective ball sockets are found, you should complete the inspection form provided with Service Bulletin S08NL and fax or email to DCM Manufacturing, Inc. DCM Manufacturing, Inc. will ship any replacement fans needed to you at 'no charge".

Your buses affected by Service Bulletin S08NL are identified by Blue Bird body number on the enclosed cover sheet.

Labor time allowed to inspect fan ball sockets is 0.1 hour **per bus**. Labor time allowed to replace fans with defective ball sockets is 0.2 hours **per fan**. A qualified repair technician should perform service Bulletin S08NL.

You may request reimbursement for labor from your Blue Bird dealer if Service Bulletin S08NL is performed within one (1) year from the date issued.

Service Bulletin S08NL expires one (1) year from date of issue.

Should you have any questions concerning this bulletin, please contact your Blue Bird dealer.

Sincerely,

Bill Coleman

Bill Coleman
Blue Bird Corporation
478-822-2242
bill.coleman@blue-bird.com

BLUE BIRD

Auxiliary Fan Inspection BULLETIN

Models Affected: 2009 Model Year Blue Bird All American, Micro Bird and Vision Models

TN 80S

ISSUE

The auxiliary fan ball seat may disengage allowing the fan motor assembly to drop down.

CORRECTIVE ACTION

Inspect and, if necessary, replace complete fan assembly.

PROCEDURE

Each auxiliary fan on your bus (es) should be inspected according to the attached Field Bulletin issued by DCM Manufacturing.

Note: Check between fan motor housing and ball seat to determine if fan is a 2 or 3 wire type and indicate the type on the order form.

Fans showing inner ball seat protruding as indicated in DCM's Field Bulletin should be replaced.

To receive replacement fans you will need to complete the attached form and fax or email the completed form to DCM manufacturing as indicated on the form. Make additional copies of the form, as needed.

Labor time allowance for inspecting fan ball sockets is 0.1 hr **per bus**.

Labor time allowance for replacing fans with defective ball sockets is 0.2 hours **per fan**.

Request for reimbursement should be submitted in your usual manner.

Questions regarding this service bulletin should be addressed to your Blue Bird dealer.

Date of Issue: August 13, 2008

Table of Contents

AUXILIARY FAN WARRANTY FORM FOR SERVICE BULLETIN # S08NL

Fill out below form to order replacement fans. Make additional copies of this form as needed.

Customer Name: _____

Ship To Address: _____

City/State/Zip: _____

Phone: _____

Fax: _____

E-Mail: _____

2-wire fan motor has silver colored decal on fan motor housing with date code. Exmaple of date code "48,07"
3-wire fan motor has gold colored decal on fan motor housing with date code. If fan has 3 wires, check column below under 3-wire.

Body Number(s)	3-wire	Fan Date Code	Fan Date Code	Fan Date Code	Fan Date Code

Total number of Defective Fans: _____

PLEASE FAX COMPLETED FORM TO DCM MANUFACTURING, INC. (216) 362-6342 OR E-MAIL TO MISSY WILK AT Mwilk@dcm-mfg.com

* You will receive a fax or e-mail confirmation of receipt of claim and return ship date.

* Only fans that meet the conditions outlined in the Field Service Bulletin will be honored as a direct replacement from the manufacturer. All other warranty issues should be routed thru normal return policies.

FIELD BULLETIN: DCM MFG.

REFERENCE: Round Base Dash Fan Assemblies

POTENTIAL FAILURE: Under excessive force in certain directions, ball can disengage from base assembly.

VISUAL DETECTION: Note Fig. 1 - Correct assembly.
Note Fig. 2 - Shows inner ball seat protruding into adjustment channel indicating incorrect assembly.

CORRECTIVE ACTION: Contact DCM at 216-265-8006 ext. 109 for return authorization and replacement.

IF ANY PART OF THE BALL SEAT IS SHOWING IN THE U-CHANNEL (Fig. 2), FAN ASSEMBLY IS UNACCEPTABLE

Fig. 1

ACCEPTABLE BUILD

Fig. 2

UNACCEPTABLE BUILD
PART VISIBLE IN U-CHANNEL

BLUE BIRD

DECEMBER 18, 2008

TO: **NORTH AMERICAN DEALERS**

SUBJECT: **SERVICE BULLETIN S08NR FAN CLUTCH SPACER BOLTS**
MODELS AFFECTED: **2008-09 MODEL YEAR VISION BUSES WITH 2007 CATERPILLAR ENGINES**

Incorrect bolts and/or spacers may have been installed in the fan clutch on Blue Bird Vision buses equipped with 2007 model Caterpillar engines. If incorrect bolts were installed, the fan may separate from the fan clutch and may damage fan blades, fan clutch and potentially damage surrounding components.

Attached is a copy of Service Bulletin S08NR which contains instructions for inspecting and replacing the fan clutch bolts and spacers. A copy is attached. Replacement bolts are being shipped directly to owners so that the bolts, if needed, may be installed at time of inspection. If spacers are required, they should be ordered from Blue Bird Service Parts.

Time required to inspect the fan to clutch bolts and spacer is 0.1hrs (6 minutes) per bus. Time required to install correct length bolts and spacer, if needed, is 0.4hrs (24minutes) per bus.

A printout of your buses affected by Service Bulletin S08NR is also attached.

Service Bulletin S08NR, along with replacement bolts, is being sent directly to owners. Owners are being advised to contact their dealer for assistance, if needed.

Service Bulletin S08NR expires one (1) year from date of issue.

Questions regarding Service Bulletin S08NR should be directed to your Blue Bird Service Representative.

Sincerely,

Bill Coleman

Bill Coleman
Blue Bird Corporation
478-822-2242
bill.coleman@blue-bird.com

BLUE BIRD

December 18, 2008

Dear Blue Bird Owner,

You will find enclosed a copy of Service Bulletin S08NR regarding the fan clutch bolts and spacers installed on your 2008-09 model year Blue Bird "Vision" buses equipped with Caterpillar 07 model engines.

Incorrect length bolts and/or spacers may have been installed to attach the fan blade to the fan clutch. If incorrect bolts and/or spacers were installed, the fan blade may separate from the fan clutch and damage the fan blade, fan clutch and potentially damage surrounding components. To correct this condition, the fan clutch bolts and spacers must be inspected and, if found to be incorrect, changed to the correct length bolts and spacers.

Correct length bolts have been included with this mailing so inspection and replacement may be performed at the same time. If spacers are needed, you will need to contact your usual Blue Bird service parts source. Inspection and installation instructions are provided in Service Bulletin S08NR. (Copy attached)

Your buses affected by Service Bulletin S08NR are identified by Blue Bird body number on the enclosed cover sheet.

Time required to inspect for correct length fan to clutch bolts and/or spacers is 0.1 hours (6 minutes) per bus. Time required to install correct length fan to clutch bolts and/or spacers is 0.4 hours (24 minutes) per bus.

To have Service Bulletin S08NR performed, you may: 1) Contact your Blue Bird dealer to arrange for them to perform this procedure; **2)** Have a qualified repair facility convenient to you perform this procedure; or **3)** You may perform this procedure yourself. In either case, a qualified technician should perform this inspection and potential repair.

Service Bulletin S08NR expires one (1) year from date of issue.

Should you have any questions concerning this bulletin, please contact your Blue Bird dealer.

Sincerely,

Bill Coleman

Bill Coleman
Blue Bird Corporation
478-822-2242
bill.coleman@blue-bird.com

BLUE BIRD

Fan Clutch Spacers

BULLETIN

MODELS AFFECTED: *2008-2009 BBCV Visions w/ 2007 Cat Engines*

S08NR

ISSUE

Fan may separate from fan clutch and may damage fans blades, fan clutch, radiator, hoses and other surrounding components.

CORRECTIVE ACTION

Inspect fan spacer length and install new spacer and bolts as required.

WARNING ***Always follow all Federal, State, Local, and Shop safety standards and use proper safety equipment when performing this procedure.***

INSPECTION

1 Park vehicle on a level surface, apply parking brake, turn engine off, remove ignition key and chock wheels.

2 Disconnect batteries.

3 Open engine hood.

4 Measure the length of the spacer between the fan blade and the fan clutch. See Diagram and Chart to the right for correct installations and determine procedure needed.

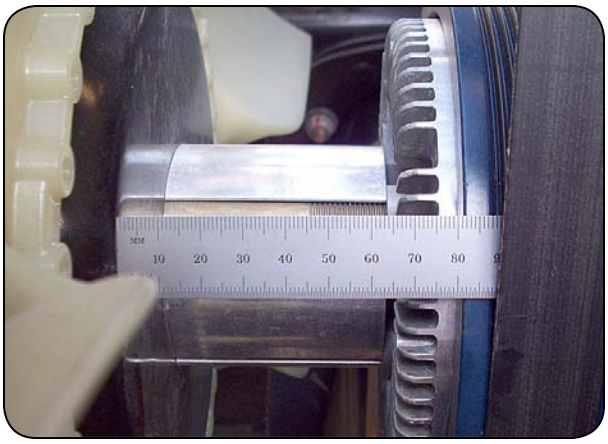

Inspection

PROCEDURE 1 ***(with correct spacer and wrong capscrews)***
For CAT C707 with CGI & DPF, and a 66.7mm (2 5/8 inch) spacer.
Note: Caterpillar C707 with CGI and DPF has a Regen switch mounted on the entrance door side fire wall.

NOTE: ***CAT C707 engines are equipped with Clean Gas Induction (CGI) and a Diesel Particulate Filter (DPF). CAT C7 and Export units are not equipped with CGI and DPF.***

PROCEDURE 2 ***(with wrong spacer and wrong capscrews)***
For CAT C707 with CGI & DPF, and a 52.8mm (2 5/64 inch) spacer.
Note: Caterpillar C707 with CGI and DPF has a Regen switch mounted on the entrance door side fire wall.

PROCEDURE 3 ***(with wrong spacer and wrong capscrews)***
For CAT C7 without CGI & DPF, or Export unit; with a 66.7mm (2 5/8 inch) spacer.

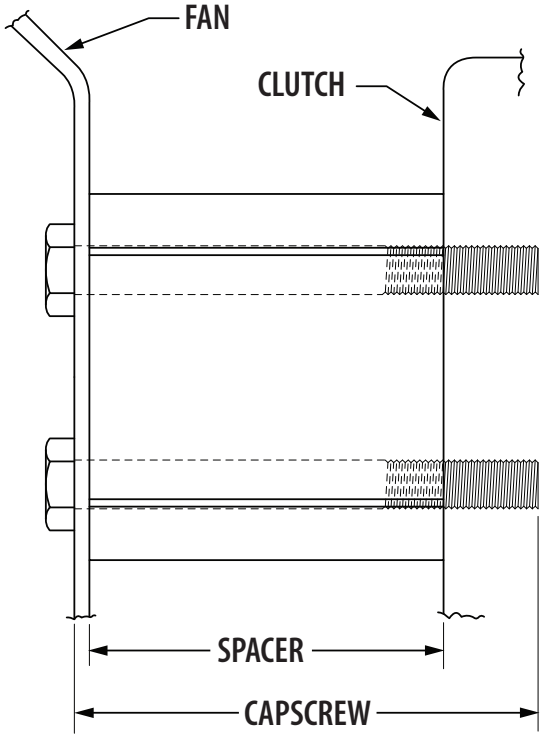

ENGINE	SPACER	CAPSCREW
CAT C707 with CGI & DPF	66.7mm (2 5/8 inches)	90mm M10-1.5 X 90mm
CAT C7 or Export without CGI & DPF	52.8mm (2 5/64 inches)	70mm M10-1.5 X 70mm

SERVICE BULLETIN

BLUE BIRD

BULLETIN

PROCEDURE 1 *(With correct spacer and wrong capscrews.)*

For CAT C707 with CGI & DPF, and a 66.7mm (2 5/8 inch) spacer.
Note: Caterpillar C707 with CGI and DPF has a Regen switch mounted on the entrance door side fire wall.

1 Remove and retain the four nuts attaching the fan shroud to the radiator. Slide the shroud rearward for access to the four capscrews attaching the fan to the fan clutch.

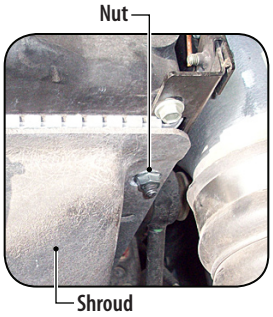

2 Remove the four 80mm capscrews and discard. Retain the four lock washers.

3 Install four 90mm capscrews (Blue Bird #10000385) with four lock washers and torque to 20-25 lb. ft. *Note: Four 90mm capscrews (Blue Bird #10000385) shipped with original Service Bulletin.*

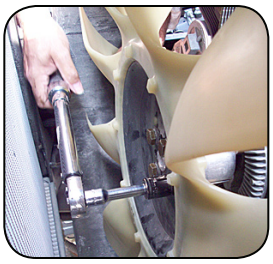

4 Slide fan shroud forward and reattach with four nuts removed in step one.

5 Close engine hood.

6 Reconnect batteries and place the bus back in service.

PARTS LIST

PART NUMBER	QUANTITY	DESCRIPTION
10000385	4	*Capscrew, Hex head, M10-1.5 x 90mm*

Supplied with original Service Bulletin.

PROCEDURE 2 *(With wrong spacer and wrong capscrews.)*

For CAT C707 with CGI & DPF, and a 52.8mm (2 5/64 inch) spacer.
Note: Caterpillar C707 with CGI and DPF has a Regen switch mounted on the entrance door side fire wall.

1 Remove and retain the four nuts attaching the fan shroud to the radiator. Slide the shroud rearward for access to the four capscrews attaching the fan to the fan clutch.

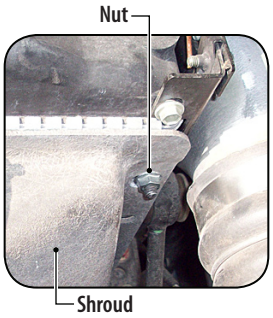

2 Remove and discard the four 80mm capscrews and spacer. Retain the four lock washers.

3 Install new Spacer (Blue Bird #10005240) with four 90mm capscrews (Blue Bird #10000385) and four lock washers. Torque to 20-25 lb. ft.

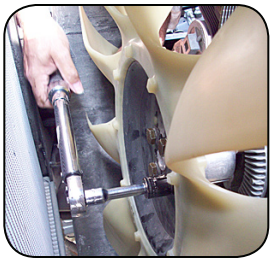

4 Slide fan shroud forward and reattach with four nuts removed in step one.

5 Close engine hood.

6 Reconnect batteries and place the bus back in service.

PARTS LIST

PART NUMBER	QUANTITY	DESCRIPTION
10005240	1	Spacer, Clutch, Fan, Horton, 00115258
10000385	4	**Capscrew, Hex head, M10-1.5 x 90mm**

Order only if not provided

BLUE BIRD

BULLETIN

PROCEDURE 3 *(Export only with wrong spacer and wrong capscrews.)*

For CAT C7 without CGI & DPF, or Export unit; with a 66.7mm (2 5/8 inch) spacer.

1 Remove and retain the four nuts attaching the fan shroud to the radiator. Slide the shroud rearward for access to the four capscrews attaching the fan to the fan clutch.

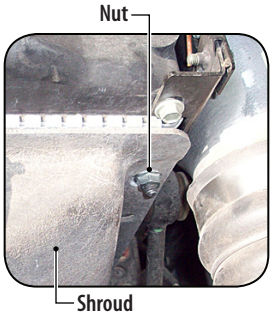

2 Remove and discard the four capscrews and spacer. Retain the four lock washers.

3 Install new Spacer (Blue Bird #10005241) with four 70mm capscrews (Blue Bird #01265990) and four lock washers. Torque to 20-25 lb. ft.

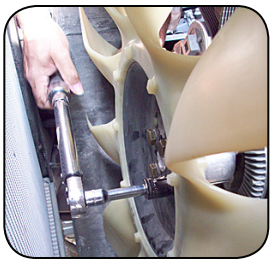

4 Slide fan shroud forward and reattach with four nuts removed in step one.

5 Close engine hood.

6 Reconnect batteries and place the bus back in service.

PARTS LIST

PART NUMBER	QUANTITY	DESCRIPTION
10005241	1	Spacer, Clutch, Fan, Horton, 00068057
01265990	4	Capscrew, Hex head, M10-1.5 x 70mm

BLUE BIRD

FEBRUARY 09, 2010

TO: NORTH AMERICAN DEALERS

SUBJECT: SERVICE BULLETIN S10RD RADIATOR INTERNAL TRANSMISSION OIL COOLER FAILURES

MODELS AFFECTED: 2008-2010 MODEL YEAR "VISION" MODEL BUSES EQUIPPED WITH 2007 ENGINES AND ALLISON 3000 PTS TRANSMISSIONS

The radiator internal transmission oil cooler located on the bottom of the radiator on affected units may crack or burst due to fatigue from high-pressure cycling. In the event this occurs, the mixing of engine coolant and transmission oil will result in eventual engine and/or transmission damage. The radiator internal transmission oil cooler (lower tank) must be removed and replaced according Service Bulletin S10RD. Copy attached.

Time allowed to replace the radiator internal transmission oil cooler (lower tank) engine coolant and transmission oil is 3 hours per bus.

Replacement internal transmission oil cooler must be ordered through Blue Bird Service Parts.

A printout of your buses affected by Service Bulletin S10RD is attached.

Service Bulletin S10RD is being mailed directly to owners. Owners are being advised to contact their dealer for assistance, if needed.

Service Bulletin S10RD ends one (1) year from date of issue. Claims for repairs performed after the end date cannot be submitted to Blue Bird.

Questions regarding Service Bulletin S10RD should be directed to your Blue Bird Service Representative.

Sincerely,

Bill Coleman

Bill Coleman
Engineering Services
Blue Bird Corporation
478-822-2242
bill.coleman@blue-bird.com

BLUE BIRD

February 09, 2010

Dear Blue Bird Owner,

You will find enclosed a copy of Service Bulletin S10RD regarding the radiator internal transmission oil cooler on certain 2008 through 2010 model year Blue Bird "Vision" model buses equipped with 2007 emission engines and Allison 3000 PTS transmission.

The radiator internal transmission oil cooler located on the bottom of the radiator on affected units may crack or burst due to fatigue from high-pressure cycling. In the event this occurs, the mixing of engine coolant and transmission oil will result in eventual engine and/or transmission damage. The radiator internal transmission oil cooler (lower tank) must be removed and replaced according Service Bulletin S10RD. Copy attached.

Your buses affected by Service Bulletin S10RD are identified by Blue Bird body number on the enclosed cover sheet.

Time allowed to replace the radiator internal transmission oil cooler (lower tank), engine coolant and transmission oil is 3 hours per bus.

You will need to contact your Blue Bird dealer to obtain parts specified in Service Bulletin S10RD.

You should contact your Blue Bird dealer to arrange to have Service Bulletin S10RD performed. Or, if you prefer, you may perform Service Bulletin S10RD yourself or have it performed by a qualified repair facility convenient to you. A qualified technician must perform this bulletin. Blue Bird recommends that the actual disassembly/reassembly of the radiator/ transmission cooler be performed by a qualified and appropriately equipped radiator repair facility.

Service Bulletin S10RD ends one (1) year from date of issue.

Should you have any questions concerning this bulletin, please contact your Blue Bird dealer.

Sincerely,

Bill Coleman

Bill Coleman
Engineering Services
Blue Bird Corporation
478-822-2242

BLUE BIRD

Vision Transmission Oil Cooler

BULLETIN

MODELS AFFECTED: 2008 through 2010 Blue Bird Vision

Equipped with Allison PTS 3000 Transmission Built February 1, 2007 through May 17, 2009

S10RD

SERVICE BULLETIN

ISSUE

On affected buses, high pressure cycling may cause the internal transmission oil cooler of radiator assembly 00115577 to fatigue, resulting in transmission oil / engine coolant contamination.

CORRECTIVE ACTION

This procedure removes and disassembles the radiator assembly and replaces the internal transmission oil cooler with a new oil cooler (10016104).

PROCEDURE ALWAYS READ THE ENTIRE PROCEDURE BEFORE PERFORMING

WARNING ***Always follow all federal, state, local, and shop safety standards and use proper safety equipment when performing this procedure.***

1 Secure the vehicle and prepare it for radiator removal:

1.1 Park vehicle on level surface. Apply the parking brake. Remove key and chock the wheels. Disconnect both positive and negative battery cables. Allow the engine to cool.

WARNING ***When disconnecting batteries, remove the negative cable first. When re-connecting batteries, connect the negative cable last.***

CAUTION ***Cover all openings in the engine, transmission, and radiator as they are opened. Plug all removed tubing, hoses and piping to prevent contamination.***

1.2 Remove the drain plug from the bottom of the transmission and drain the tranmission oil into a suitable container.

1.3 Disconnect the two transmission cooler hoses at the bottom of the radiator. Be prepared to contain oil leakage from the transmission cooler and hoses. Cap the open ends of the transmission hoses to prevent contamination of the hoses. Support disconnected hoses out of the way. Remove the 45° and 90° elbows and retain for reinstallation.

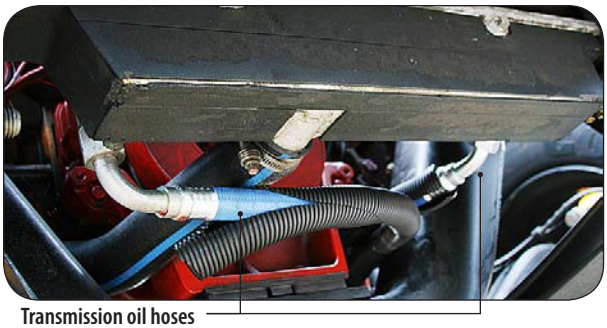

Transmission oil hoses

2 Open both heater circuit valves.

3 Drain the coolant from the petcock at the bottom of the radiator into an appropriate recepticle.

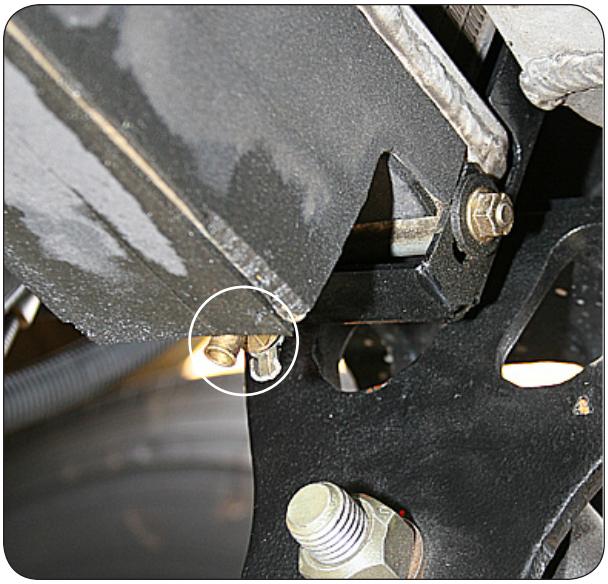

4 Remove the radiator assembly, as follows:

4.1 Open the engine hood to its fully upright position and support it securely so as to avoid damage to the shell when the stop cables are removed.

4.2 Remove the four bolts which mount the top radiator baffle to the top of the radiator.

4.3 Remove the two bolts which mount the left and right radiator baffle panels to the front of the radiator.

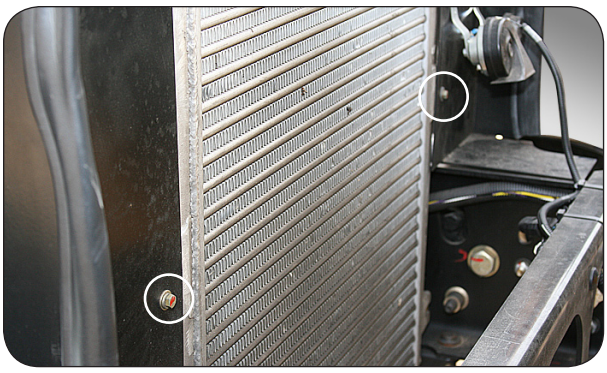

4.4 Carefully lift the three radiator baffle panels (still assembled) out of the way.

4.5 Loosen the clamps of the right and left charge air cooler tubes and remove the tubes.

CAUTION ***Cover the ends of all open ports and tubing ends of the CAC system to prevent contamination.***

4.6 Disconnect the top radiator hose and the small vent hose from the top of the radiator. Secure the disconnected hoses out of the way.

4.7 If the vehicle is equipped with shutters, disconnect the shutter actuator air or oil line from the shutters actuator.

4.8 After removing all the hoses and piping, remove the four hex nuts at the corners of the fan shroud. Pull the shroud as far rearward (over the fan) as possible. Allow the shroud to hang over the fan blades.

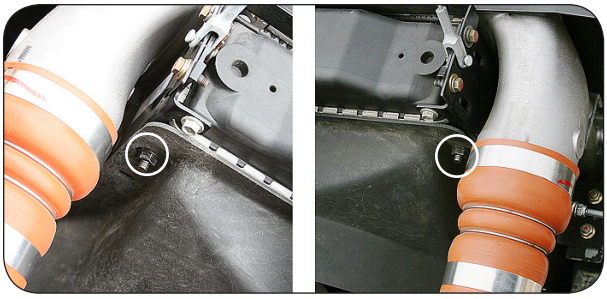

4.9 Remove the bottom radiator coolant hose.

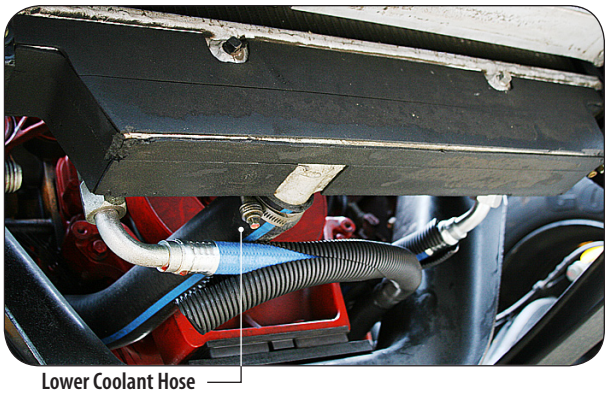

Lower Coolant Hose

4.10 On each side of the radiator, remove the diagonal radiator support strut.

4.11 On each side of the radiator, remove the two nuts which secure the radiator to the rubber isolator blocks.

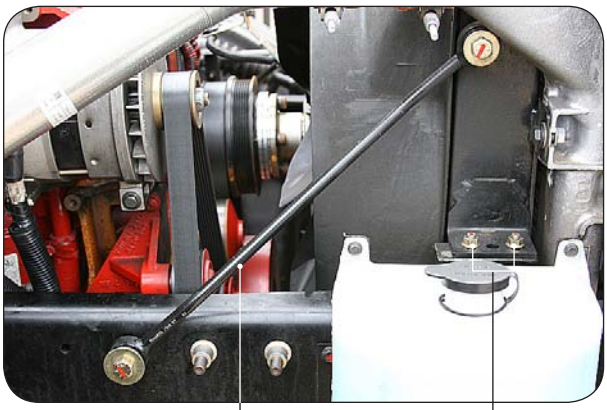

Diagonal Support Strut

Isolator Block Nuts

4.11 Using an overhead hoist, carefully lift the radiator clear of the frame rails. Ensure the fins on the radiator and charge air are protected.

4.12 On each side of the radiator, remove the two bolts which fasten the charge air cooler to the radiator. Set the charge air cooler aside in a safe place.

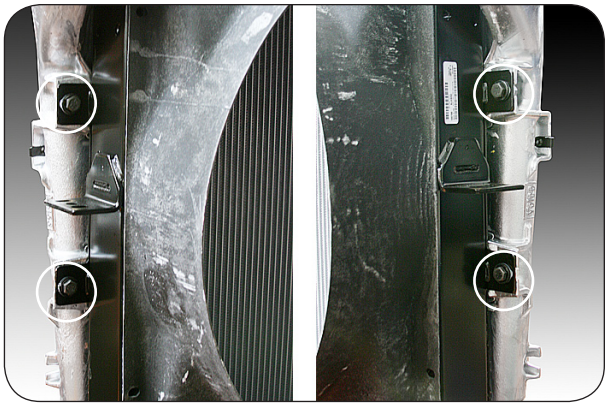

4.13 If the radiator is equipped with shutters, remove the shutters assembly.

5 Blue Bird recommends that the actual disassembly/ reassembly of the radiator / transmission cooler be performed by a qualified and appropriately equipped radiator repair facility. Remove the lower tank from the radiator as follows:

5.1 Mount the radiator core and tanks carefully in a radiator assembly fixture.

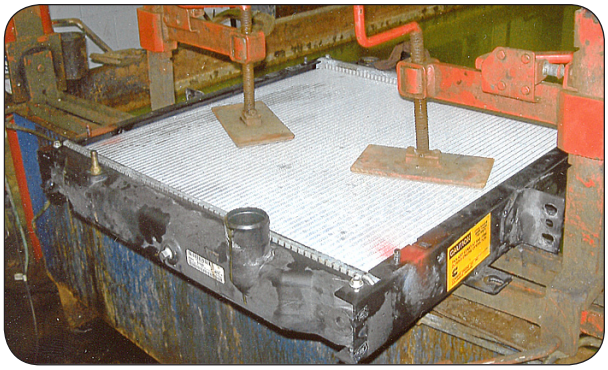

5.2 Position the radiator with the bottom tank upward. Starting near the middle of the radiator's width and working toward the ends, use Johnson Tab Tool 414-01W to bend the crimp strip tabs upward approximately 90°.

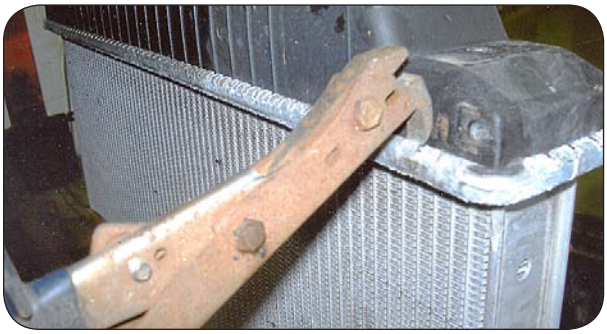

5.3 Remove the two crimp strips and dispose of them. New crimp strips will be used for reassembly.

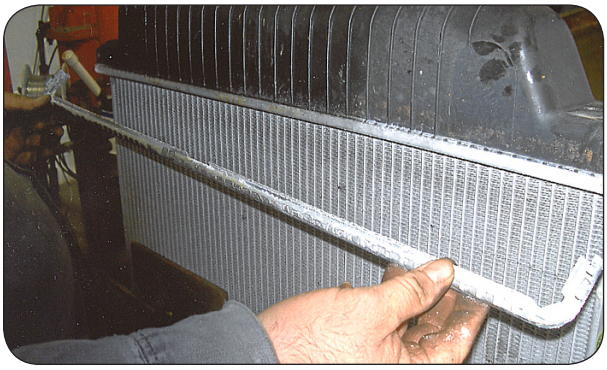

5.4 Carefully separate the plastic tank from the core. The fit is tight and may require some effort to remove. Avoid prying that may damage the sealing groove.

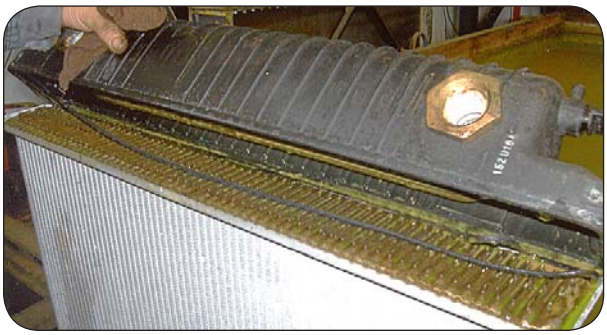

5.5 Remove and dispose of the sealing gasket.

5.6 Using a wire brush, clean away accumulated debris from the sealing groove and cooling tube ends.

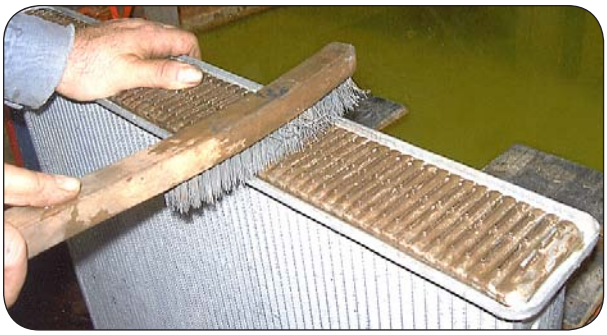

5.7 Lubricate the new gasket with ethylene glycol, and set it carefully in place. Be careful to avoid twisting, cutting or otherwise damaging the gasket.

5.8 With the radiator core securely mounted in the assembly fixture, seat the new plastic tank against the gasket. The fit is tight. Use caution to avoid damage.

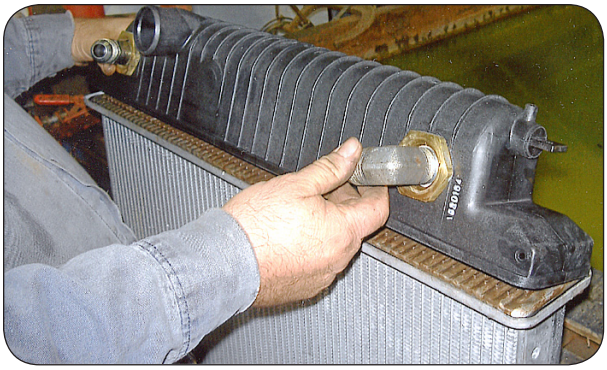

5.9 Install a new crimp strips to each side of the radiator sealing flange. Partially bending one or two tabs to help hold the strip in place is acceptable.

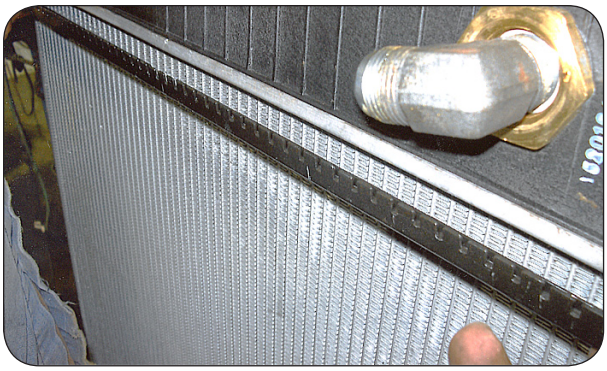

5.10 Using a plastic tank radiator repair fixture, apply uniform pressure to the tank to seat the tank and compress the gasket. Use extreme caution to distribute the clamping force evenly to avoid damage to the tank.

5.11 Starting at the center and progressing toward the ends, pre-crimp the tabs around the tank by partially bending each tab. This helps ensure uniform clamping while avoiding excessive localized stress.

5.12 Bend each tab firmly against the plastic sealing flange. While proceding, take measurements to ensure the crimping strip's height is within the tolerance indicated in the drawing below. Do not attempt to compress the gasket further; doing so risks cracking of the tank.

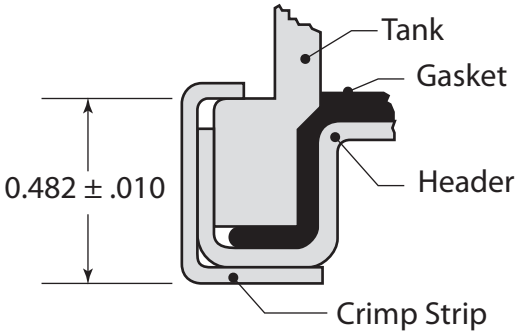

5.13 Test for leaks using air under water at 18 PSI.

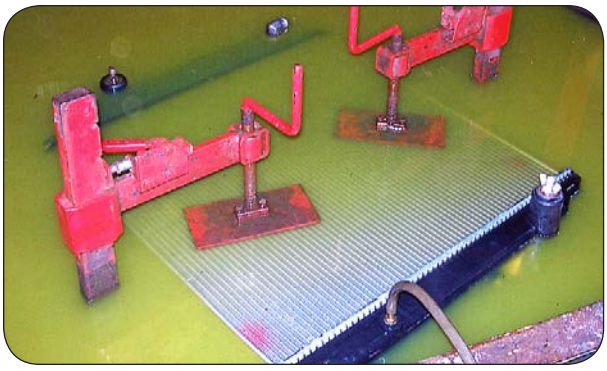

6 Reinstall the radiator by reversing the removal procedure described in step 4. When reinstalling the transmission hose elbow fittings, orient them as shown below:

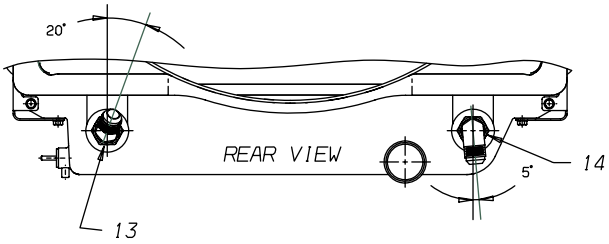

7 Refill the transmission with new Transynd fluid.

8 Referring to Servcie Update S1003 (included) perform the complete cooling system and heating system drain and refill procedure for the appropriate engine. Chemical flush is neither required by this procedure, nor is its cost covered by this Bulletin. Perform the chemical flush only if otherwise required.

TOOLS REQUIRED

- Johnson Tab Tool 414-01
- Radiator service fixture

PARTS

PART NUMBER	QUANTITY	DESCRIPTION
10016104	1	Tank, Lower, Radiator ITOC, Service Part, BBCV
	12.5 gallons	Coolant
00102736	3 gallons	Fluid, Trans, Synthetic, Transynd

Standard & Optional Coolants

UPDATE

MODELS AFFECTED: *All School Bus Models*

ISSUE

Blue Bird has implemented new engine coolant specifications for all buses built upon Blue Bird built chassis with Cummins® engines. These include A3FE (All American Forward Engine), A3RE (All American Rear Engine), D3FE (All American Forward Engine), D3RE (All American Rear Engine), and BBCV (Vision). Optional long life coolant is also available for Cummins® engines on these products.

This update also includes coolant information for the BBCV propane with GM® 8.1 engine.

John Deere® Cool Gard will only be used in John Deere engines.

APPLICATIONS

Standard Equipment Coolant

The table below lists coolant specifications and effectivity dates:

Prior to March 26, 2009

ENGINE	COOLANT LIFE	FEATURE | COOLANT, STANDARD	FEATURE | COOLANT, OPTIONAL
Caterpillar®	Standard	4011107 | John Deere Cool-Gard 50/50 (Green)	4011109 | Caterpillar® ELC 50/50 (Red)
Cummins®	Standard	4011107 | John Deere Cool-Gard 50/50 (Green)	4011108 | Fleet Guard® ES Optimax 60/40 (Red)
John Deere®	Extended	4011107 | John Deere Cool-Gard 50/50 (Green)	
GM®	Extended	4011104 | Havoline Dex-Cool 7995 50/50 (Orange)	

On Or After March 26, 2009

ENGINE	COOLANT LIFE	FEATURE | COOLANT, STANDARD	FEATURE | COOLANT, OPTIONAL
Caterpillar®	Extended	4011109 | Caterpillar® ELC 50/50 (Red)	
Cummins®	Standard	4011111 | Fleetguard ES Optimax 50/50 (Blue)	4011108 | Fleet Guard® ES Optimax 60/40 (Red)
GM®	Extended	4011104 | Havoline Dex-Cool 7995 50/50 (Orange)	

Coolant Filter: Caterpillar & Cummins

On buses equipped with any of the above-listed Caterpillar® or Cummins® engine and also equipped with an optional coolant filter, the same Wix® replacement filter element cartridge is used:

Blue Bird Part Number: 0064641

Wix Part Number: 24070

The coolant filter should be replaced every 6 months or 6,000 miles; whichever occurs first.

Coolant Decals

On buses equipped with any of the above-listed engines, Blue Bird installs a decal stating:

- The type of coolant installed at the factory.
- The coolant manufacturer's part number for one gallon quantity, suitable for regular top-off and refill.
- The coolant manufacturer's part number for one gallon quantity of the concentrate version of the installed coolant, suitable for formulating stronger glycol mixture ratio.

Blue Bird also installs a second decal containing radiator warnings. Both decals are mounted near the coolant fill neck.

COOLANTS

John Deere® Cool-Gard

Green in color.

Standard equipment coolant in all A3FE, A3RE, BBCV, BCCV with Caterpillar, Cummins, and John Deere engines. before March 26, 2009.

On and after March 26, 2009, John Deere Cool-Gard is used for John Deere engines only.

Qualifies as extended-life coolant in John Deere engines.

Considered standard-life coolant in Caterpillar and Cummins engines.

Concentrate version may be mixed with the pre-mix version to lower freezing point.

New John Deere Cool-Gard II may be used with John Deere Cool-Gard.

50/50 Premix	BLUE BIRD NUMBER	JOHN DEERE NUMBER
1 Gallon Container	0109179	TY25081
2 1/2 Gallon Container		TY16036
55 Gallon Drum		TY16037
330 Gallon Tote		TY24504
Concentrate		
1 Gallon Container		TY16034

Caterpillar® ELC

Red in color.

Optional coolant in A3FE, A3RE, BBCV, BCCV with Caterpillar engines.

Qualifies as extended-life coolant in Caterpillar engines.

Blue Bird installs 50/50 premix, which is available in one gallon and larger (listed) containers.

The 50/50 premix may be mixed with the concentrate version per Caterpillar's instructions to achieve 60/40 ratio.

Concentrate version may be mixed with the pre-mix version to lower freezing point.

50/50 Premix	BLUE BIRD NUMBER	CATERPILLAR NUMBER
1 Gallon Container		101-2844
Case of six 1 Gallon Containers	0113986	
55 Gallon Drum		101-2845
275 Gallon Tote		222-1534
Concentrate		
1 Gallon Container	0113987	119-9150

Fleetguard® ES Compleat (March 26, 2009 and later)

Blue in color.

Standard coolant in all Blue Bird buses with Cummins engines.

Blue Bird installs 50/50 premix, which is available in one gallon containers and in larger containers (listed).

The 50/50 premix may be mixed with the concentrate version per Fleetguard's instructions to achieve 60/40 ratio.

Concentrate version may be mixed with the pre-mix version to lower freezing point.

50/50 Premix	BLUE BIRD NUMBER	FLEETGUARD NUMBER
1 Gallon Container		CC2825
55 Gallon Drum		CC2826
275 Gallon Tote		CC2834
Concentrate		
1 Gallon Container		CC2820

Fleetguard® ES Optimax

Red in color.

Optional coolant in A3FE, A3RE, BBCV, BCCV with Cummins engines.

Qualifies as extended-life coolant in Cummins engines.

Blue Bird installs 60/40 premix, which is not available in one gallon containers, but is available in larger containers (listed).

The 50/50 premix may be mixed with the concentrate version per Fleetguard's instructions to achieve 60/40 ratio.

Concentrate version may be mixed with the pre-mix version to lower freezing point.

50/50 Premix	BLUE BIRD NUMBER	FLEETGUARD NUMBER
1 Gallon Container	0109178	CC2785/2785X
60/40 Premix		
55 Gallon Drum		CC2770/2770X
275 Gallon Tote		CC2790/2790X
Concentrate		
1 Gallon Container	0109552	CC2780/2780X

Havoline® DEX-COOL

Orange in color.

Standard coolant in BBCV Propane with GM 8.1 engine.

Qualifies as extended-life coolant.

Blue Bird installs 50/50 premix, which is available in one gallon containers, and in larger containers (listed).

The 50/50 premix may be mixed with the concentrate version per Havoline instructions to achieve 60/40 ratio.

Concentrate version may be mixed with the pre-mix version to lower freezing point.

50/50 Premix	BLUE BIRD NUMBER	HAVOLINE NUMBER
Gallon		7995
Concentrate		
Gallon		7994

COOLANT MAINTENANCE

Blue Bird advises strictly abiding by the following policy for all coolant maintenance for the life of the vehicle:

Never Mix Coolant Types
Routine coolant addition (top-off) must match the installed coolant type and brand. Do not mix coolants of different colors, types, or brands in the same engine.

Strictly Follow The Engine Manufacturer's Specifications
Each engine manufacturer publishes its own specific requirements for testing and maintaining coolant in their respective engines. Blue Bird recommends strictly abiding by the engine manufacturer's testing and maintenance schedules and draining, flushing, refilling procedures to maintain compliance with the engine warranty requirements. Blue Bird further recommends that you maintain accurate vehicle-specific service records of all coolant system maintenance procedures performed.

For Caterpillar or Cummins engines equipped with John Deere Cool-Gard coolant, follow the engine manufacturer's maintenance schedules for standard-life coolant, not for extended-life coolant.

For Caterpillar engines using Caterpillar ELC extended life coolant, perform testing at a qualified coolant laboratory per the Caterpillar Operation and Maintenance Manual. Label sample as Extended-Life coolant.

For Cummins engines using Fleetguard ES Compleat coolant, send coolant samples to Fleetguard for Monitor C testing, as specified in the Cummins Operator's Manual. Label sample as Conventional coolant.

For Cummins engines using Fleetguard ES Optimax extended-life coolant, send coolant samples to Fleetguard for Monitor C testing, as specified in the Cummins Operator's Manual. Label sample as Extended-Life coolant.

For Caterpillar, Cummins, or John Deere engines using John Deere Cool-Gard coolant, send coolant samples to a John Deere lab for Cool Scan testing; or test manually using a John Deere Three-Way test strip, supplied in John Deere 3-Way Heavy Duty Coolant Test Kit TY6175.

The cost of testing is the owner's responsibility as part of the engine manufacturer's requirements for cooling system maintenance. If a test indicates a coolant defect, the dealer may submit a preapproval claim (either warranty or policy), with the test report and bus coolant service records attached, before any repairs are performed. As with all warranty and policy claims, defective parts must be retained until the claim has been paid. Dealers and/or owners should retain at least one gallon of the drained coolant until the claim is paid, in case Blue Bird, or the engine manufacturer, or the coolant manufacturer requires further testing.

Always Mix Concentrate With Premix Coolant, Not Water
If concentrated coolant is added in order to raise the glycol ratio, use only the concentrate version of the same premix coolant type and brand as installed. Do not mix the concentrate with water. Instead, mix the concentrate with the premix version of the same coolant.

Only Add Tap Water In Emergency Situations
A regularly-scheduled bus inspection and maintenance program should be followed to prevent coolant losses due to damaged or worn hoses, loose clamps, etc.
If coolant is lost while the bus is in use, and roadside emergency measures are called for, replenish the coolant with the same premix type and brand if possible. If the proper coolant is not available, and water must be used, use only de-ionized water if possible. Ordinary tap water should only be used if proper coolant or de-ionized water are not available.
Whenever tap water has been added, the bus should be taken to a service facility and the entire cooling system should be completely drained, flushed, and refilled with premix coolant.

COOLANT SYSTEM FLUSH & REFILL FOR A3FE, A3RE, AND BBCV WITH CATERPILLAR® ENGINE

Always read the entire procedure before performing. Blue Bird recommends the flush and refill procedure for Caterpillar engines being performed by an authorized Caterpillar dealer/distributor.

CAUTION ***After acid type cleaners such as those mentioned in this procedure are used, the system must be flushed with fresh water 3 to 5 times to ensure complete removal of the cleaner from the system. If cleaner is not completely removed, ammonia salt residue may remain and severe copper corrosion can occur.***

CAUTION ***If differences between instructions in this Service Update and the engine manufacturer's Operation and Maintenance Manuals are encountered, the engine manufacturer's information takes precedence.***

1 Follow Caterpillar's instruction in the *Caterpillar Operation and Maintenance Manual* for chemically flushing the entire cooling system.

If the engine cooling system is contaminated by sludge or oil, the system should be flushed with Caterpillar's 30-Day cleaner. If the engine cooling system is contaminated by scale and deposits the system should be flushed with Caterpillar Quick Flush cleaner.

2 After the engine has been stopped and the cooling system has cooled, perform **Procedure 1: Cooling and Heater System Drain,** included in this Service Update.

3 Rinse the cooling system with fresh water three to five times, as follows:

3.1 Open all heater circuit valves.

3.1 Fill the system with fresh water.

3.3 Start the engine. Turn on the heater system pumps.

3.4 Run the engine for a minimum of 30 minutes at high idle with heater pumps on and all heater valves open.

3.5 Turn off the engine and allow it to cool completely.

3.6 After the cooling system has cooled, again perform **Procedure 1: Cooling and Heater System Drain** through Step 2.4.

3.7 With the hoses disconnected and the drain valves open, run fresh water through the heater system, radiator, transmission cooler, and engine until the water is clear.

3.8 Perform **Procedure 1: Cooling and Heater System Drain** Step 3.

3.9 Repeat Steps 2 through 3 of this procedure as many times as required to ensure that the system is clean and the flush chemicals are completely removed.

4 If the bus is equipped with a coolant filter, thoroughly clean the filter head and lines, removing all of the old coolant and residue. Reinstall the filter assembly. Install a new coolant filter element.

5 Perform the coolant refill procedure for Caterpillar engines, as follows:

5.1 Install Caterpillar® ELC Premixed 50/50 following Caterpillar instructions in the Caterpillar Operation and Maintenance Manual.

5.2 Operate engine to open thermostats and allow the air to escape from the system. If the coolant level drops when the thermostats open or during bleeding of the heater system, stop and add premix coolant.

6 Perform **Procedure 2: Heater System Bleeding** to bleed trapped air from the heater system.

7 After operating the bus for approximately 30 days, submit samples of the installed coolant to a coolant laboratory equipped to perform a Caterpillar SOS Level 2 coolant test, to ensure that the system is free of heavy metals contamination, that the cleaner has been completely removed, and that the corrosion protection and glycol levels are correct.

After the 30 day test, resume the regular testing schedule as specified by the engine manufacturer.

COOLANT SYSTEM FLUSH & REFILL FOR BBCV, A3FE, & A3RE WITH CUMMINS® ENGINE

Always read the entire procedure before performing. Blue Bird recommends that the flush and refill procedure for Cummins® engines is performed by an authorized Cummins dealer/distributor.

CAUTION ***After acid type cleaners such as those mentioned in this procedure are used, the system must be flushed with fresh water 3 to 5 times to ensure complete removal of the cleaner from the system. If cleaner is not completely removed, ammonia salt residue may remain and severe copper corrosion can occur.***

CAUTION ***If differences between instructions in this Service Update and the engine manufacturer's Operation and Maintenance Manuals are encountered, the engine manufacturer's information takes precedence.***

1. Follow Cummins instruction for chemically flushing the entire cooling system.

If the engine cooling system is contaminated by sludge or oil, the system should be flushed with Restore. If the engine cooling system is contaminated by scale and deposits the system should be flushed with Restore Plus.

2 After the engine has been stopped and the cooling system has cooled, perform **Procedure 1: Cooling and Heater System Drain,** included in this Service Update.

3 Rinse the cooling system with fresh water three to five times, as follows:

3.1 Open all heater circuit valves.

3.1 Fill the system with fresh water.

3.3 Start the engine. Turn on the heater system pumps.

3.4 Run the engine for a minimum of 30 minutes at high idle with heater pumps on and all heater valves open.

3.5 Turn off the engine and allow it to cool completely.

3.6 After the cooling system has cooled, again perform **Procedure 1: Cooling and Heater System Drain** through Step 2.4.

3.7 With the hoses disconnected and the drain valves open, run fresh water through the heater system, radiator, transmission cooler, and engine until the water is clear.

3.8 Perform **Procedure 1: Cooling and Heater System Drain** Step 3.

3.9 Repeat Steps 2 through 3 of this procedure as many times as required to ensure that the system is clean and the flush chemicals are completely removed.

4 If the bus is equipped with a coolant filter, thoroughly clean the filter head and lines, removing all of the old coolant and residue. Reinstall the filter assembly. Install a new coolant filter element.

5 Perform the coolant refill procedure for Cummins engines, as follows:

5.1 Install Fleet Guard ES Optimax Ethylene Glycol Premixed 50/50 following Cummins instructions.

5.2 Operate engine to open thermostats and allow the air to escape from the system. If the coolant level drops when the thermostats open or during bleeding of the heater system, stop and add premix coolant.

6 Perform **Procedure 2: Heater System Bleeding** to bleed trapped air from the heater system.

7 After operating the bus for approximately 30 days, submit samples of the installed coolant to a coolant laboratory equipped to perform a Monitor C Cummins Fleet Guard coolant test, to ensure that the system is free of heavy metals contamination, that the cleaner has been completely removed, and that the corrosion protection and glycol levels are correct.

After the 30 day test, resume the regular testing schedule as specified by the engine manufacturer.

COOLANT SYSTEM FLUSH & REFILL FOR A3RE WITH JOHN DEERE ENGINE

Always read the entire procedure before performing. Blue Bird recommends that the flush and refill procedure for John Deere engines is performed by an authorized John Deere dealer/distributor.

CAUTION ***After acid type cleaners such as those mentioned in this procedure are used, the system must be flushed with fresh water 3 to 5 times to ensure complete removal of the cleaner from the system. If cleaner is not completely removed, ammonia salt residue may remain and severe copper corrosion can occur.***

CAUTION ***If differences between instructions in this Service Update and the engine manufacturer's Operation and Maintenance Manuals are encountered, the engine manufacturer's information takes precedence.***

1 With the engine fully cooled, remove the engine thermostat.

CAUTION ***The engineThermostats must be removed to allow entire cooling system to be flushed.***

1.1 Remove the engine thermostat cover.

1.2. Remove the thermostats from the engine.

1.3 Reinstall the thermostat cover and gasket, tightening the three cover cap screws to 47 Nm (35 lb-ft).

1.4 If the engine is equipped with a coolant filter, close the coolant filter valve. Remove the coolant filter.

2 Fill the cooling system with clean water and Fleetguard® Restore Plus™. Refer to the manufacturer's instructions on the cleaner label for correct mixture.

2.1 Run engine for one hour on high idle with the heater pump on and all valves open.

2.2 Stop the engine and allow to it to cool for 10 minutes.

2 After the engine has been stopped and the cooling system has cooled, perform **Procedure 1: Cooling and Heater System Drain,** included in this Service Update.

3 Rinse the cooling system with fresh water three to five times, as follows:

3.1 Open all heater circuit valves.

3.1 Fill the system with fresh water.

3.3 Start the engine. Turn on the heater system pumps.

3.4 Run the engine for a minimum of 30 minutes at high idle with heater pumps on and all heater valves open.

3.5 Turn off the engine and allow it to cool for 10 minutes.

3.6 After the cooling system has cooled, again perform **Procedure 1: Cooling and Heater System Drain** through Step 2.4.

3.7 With the hoses disconnected and the drain valves open, run fresh water through the heater system, radiator, transmission cooler, and engine until the water is clear.

4 Disconnect these additional connections and flush thoroughly with clean water:

4.1 Remove one heater hose at the transmission cooler and run clean fresh water into the heater hose to the bus heater.

4.2 Remove the hose from the bottom of the surge tank. Fill the tank with allow to fill and drain.

4.3 At the radiator, remove the tube leading to the therostat housing. Flush into the engine and into the radiator.

4.4 Remove the hose at the air compressor and flush.

4.5 At the coolant filter, open the filter valves and flush up into the ports at the filter flange.

5. Run shop air through the system (15 PSI maximum) at following locations until all water is expelled:

5.1 Blow through the heater hoses.

5.2 At the air compressor, open the petcock located below the coolant pump to also drain the engine block.

CAUTION ***All chemical flush must be completely removed. If the water is not clear, repeat steps 3 through 5 as required.***

6 Reinstall all hoses to engine block, transmission cooler, surge tank, and radiator.

3.8 Perform **Procedure 1: Cooling and Heater System Drain** Step 3.

7 If the bus is equipped with an engine coolant filter, install a new filter element.

8 Install new thermostats as follows:

8.1 Remove the thermostat cover and install new thermostats into engine block with new gasket.

8.2 Reinstall the thermostat cover and tighten the three cover cap screws to 47 Nm (35 lb-ft).

9 Perform the coolant refill procedure for John Deere engines, as follows:

9.1 Open the bleeder valuve located near the surge tank.

9.1 Fill cooling the system with approximately 14 gallons of John Deere Premixed 50/50 COOL-GARD coolant.

9.3 With the heater valves open and the heater pump on, run the engine on high idle. As air bleeds from the syste, add coolant as necessary. Drive the vehicle on the road for 10-15 minutes, recheck the coolant level, and replenish as required.

CAUTION ***All air must be expelled from the cooling system. Open bleeder valve located near side of surge tank when filling system. Close valve when all air has been expelled.***

10 After the correct coolant level has been reached, allow the bus to cool. Remove a coolant sample from the radiator petcock for testing.

- Test John Deere COOL-GARD coolant with a John Deere 3 WAY Heavy Duty test strip. **Check expiration date on the test strips before using.** If the coolant does not meet John Deere requirement on the test kit chart, follow John Deere recommendation for correcting the coolant mixture.
- An alternate method is to check glycol level with a refractometer to be sure the percentage of glycol is correct.

11 Perform **Procedure 2: Heater System Bleeding** to bleed trapped air from the heater system. After the coolant level is correct, pressure test the cooling system for leaks.

12 After operating the bus for approximately 30 days, submit samples of the installed coolant to a coolant laboratory equipped to perform a John Deere Cool Scan coolant test, to ensure that the system is free of heavy metals contamination, that the cleaner has been completely removed, and that the corrosion protection and glycol levels are correct.

After the 30 day test, resume the regular testing schedule as specified by the engine manufacturer.

PROCEDURE 1: COOLING AND HEATER SYSTEM DRAIN

Always read the entire procedure before performing.

CAUTION ***If differences between instructions in this Service Update and the engine manufacturer's Operation and Maintenance Manuals are encountered, the engine manufacturer's information takes precedence.***

1. Prepare the bus for draining the coolant, as follows:

1.1 Park bus on a level surface, apply parking brake and chock the wheels. Turn off the engine, remove ignition key.

1.2 Locate and open all heater valves for flushing the entire cooling system. All heater valves must be open in order to completely drain the system.

1.3 Run the engine on high idle with heater valves open and heater pump on until normal operating temperature is achieved.

1.4 Turn off the engine, remove ignition key. Allow the engine to cool completely.

2. Drain and discard the coolant, as follows:

WARNING ***Sudden release of fluids from a pressurized cooling system can cause serious burns. Do not remove the radiator cap when the engine is running. Remove the filler cap only when cool enough to touch with bare hands. Slowly loosen cap to its first stop to relieve pressure, before removing completely. Ensure that the cooling system is cool before draining and flushing.***

2.1 If the system is equipped with a coolant filter, close the valves to the filter and remove the filter.

2.2 Position a coolant drain pan under the radiator drain. Open the radiator cap. Remove the radiator drain plug.

WARNING ***Engine coolant is toxic and is an eye and skin irritant. Protective gear should be worn when working with coolant. Engine coolant is a threat to the environment. Use appropriate containers for disposal. Observe all applicable federal, state, and local laws when disposing of coolant.***

2.3 After the system has drained, remove both the pressure and return heater hoses. Use a shop air hose set at a maximum of 15 PSI, to blow the remaining coolant from the heater system.

2.4 Position a coolant drain pan under the lowest drain port or plug on the engine to drain any remaining coolant.

If the engine is a John Deere® engine, open the drain valve below the coolant pump and attach a drain hose to the fitting.

Removal of the thermostat may assist in draining. Follow the engine manufacturer's recommendation regarding thermostat removal and installation.

3 After draining is complete, close all drains. Reinstall the heater hoses removed in Step 2.3. Reinstall all plugs that have been opened or removed. Reinstall thermostats that were removed following engine manufacturer's procedures.

PROCEDURE 2: HEATER SYSTEM BLEEDING

After flushing and refilling the coolant system, perform this procedure to remove trapped air from the heater system. Always read the entire procedure before performing.

CAUTION ***Only replenish coolant with the same premix coolant as installed. Do not top off coolant level with water or other brand coolants. Do not mix coolant brands or colors.***

1. Prepare the bus, as follows:

1.1 Park bus on a level surface, apply parking brake. Turn off the engine, remove ignition key. Chock the wheels.

1.2 Locate and open all heater valves.

1.3 With the heater pump on, run the engine on high idle until normal operating temperature is achieved.

1.4 Turn off the engine, remove ignition key. Allow the engine to cool completely.

2 With the engine stopped and a cool engine, remove the radiator cap. Locate the ¼" black bleeder tube. Place the open end of the bleeder tube into the filler neck of the deaeration tank, and open the bleeder valve.

3 Bleed the system as follows:

3.1 Start engine and operate at 1800 to 2000 rpm until all air has been purged from the system. Using the same 50/50 premix coolant as installed, replenish the coolant to maintain the coolant level.

3.2 After all air has been purged, and a solid stream of coolant is evident, close the bleeder valve and store the bleeder line. Reinstall the radiator cap.

4 Operate the engine until the thermostats open. Stop and let engine cool. Recheck coolant levels and top off the approved 50/50 premixed coolant.

If the coolant level drops during bleeding of the heater system, stop the engine and add the same engine-appropriate premix coolant as installed.

5 After bleeding the heater system, allow the system to cool. Check the coolant level in the deaeration tank. If required, top off with the same engine-appropriate premix coolant installed. Run the engine again until the thermostats open to mix the new added coolant.

6 Turn off the engine and wait 15-30 minutes. Drain a coolant sample from the bottom of the radiator. Test the sample with a refractometer to verify the glycol level is 50%. If the glycol level is less than 50%, drain the appropriate amount of coolant and add the concentrated version of the same type of coolant as installed, according to the engine manufacturer's procedure for increasing glycol percentage to the correct level.

7 When the system has been successfully bled and the coolant level remains at the correct level, pressure test the cooling system for leaks. If no leaks are found, the bus may be returned to normal service.

BLUE BIRD

May 26, 2010

TO: AFFECTED DEALERS

SUBJECT: SERVICE BULLETIN S10RY INTERMOTIVE GUARDIAN II LIFT INTERLOCK WIRING

MODELS AFFECTED: 2007-2011 MODEL YEAR MICRO BIRD

Certain 2007-2011 model year Micro Bird buses equipped with InterMotive Guardian II lift interlock wiring were manufactured with the interlock wiring connected direct to ignition power. The interlock circuit must be connected to fused battery power. Instructions for correct interlock wiring are attached in Service Bulletin S10RY.

Time allowed to perform Service Bulletin S10RY is 0.2hrs (12 minutes) per bus.

No parts are required to perform Service Bulletin S10RY.

A printout of your buses affected by Service Bulletin S10RY is attached.

Service Bulletin S10RY is being mailed direct to owners. Owners are being advised to contact their dealer for assistance, if needed.

Service Bulletin S10RY ends one (1) year from date of issue. Claims for repairs performed after the end date cannot be submitted to Blue Bird.

Questions regarding Service Bulletin S10RY should be directed to your Blue Bird Service Representative.

Sincerely,

Bill Coleman

Bill Coleman
Engineering Services
Blue Bird Corporation
478-822-2242
bill.coleman@blue-bird.com

Table of Contents

BLUE BIRD

May 26, 2010

Dear Blue Bird Owner,

You will find enclosed a copy of Service Bulletin S10RY regarding the lift door interlock wiring on your 2007-2010 model year Blue Bird Micro Bird buses equipped with InterMotive Guardian II Lift Interlock. Your buses affected by S10RY are identified by body number on the enclosed cover sheet.

The subject buses were manufactured with the lift interlock wiring connected direct to ignition power. The interlock circuit must be connected to fused battery power. Instructions for correct interlock wiring are attached in Service Bulletin S10RY.

Time allowed to perform Service Bulletin S10RY is 0.2hrs (12 minutes) per bus.

No parts are required to perform Service Bulletin S10RY.

You may contact your Blue Bird dealer to arrange to have this service bulletin performed. Or, if you prefer, you may perform this service bulletin yourself or have a qualified repair facility convenient to you perform it. A qualified technician should perform this procedure.

Service Bulletin S10RY ends one (1) year from date of issue.

Should you have any questions concerning this bulletin, please contact your Blue Bird dealer.

Sincerely,

Bill Coleman

Bill Coleman
Engineering Services
Blue Bird Corporation
478-822-2242
bill.coleman@blue-bird.com

INTERMOTIVE GUARDIAN II LIFT INTERLOCK POWER SOURCE

BULLETIN

Models Affected: 2007 - 2010 MICROBIRD Equipped With Feature 31048-07 Guardian II Lift Interlock

ISSUE

Some buses equipped with the Intermotive Guardian II lift interlock system were incorrectly built with circuit 2502B (Red Wire) connected to ignition power.

CORRECTIVE ACTION

Inspect buses equipped with the Intermotive Guardian II lift interlock system. Buses with circuit 2502B (Red Wire) connected to ignition power will be rewired to battery power.

PROCEDURE

WARNING: Always follow all Federal, State, Local and Shop safety standards and use proper safety equipment when performing these procedures.

1. Park the bus on a level surface, apply parking brakes, turn off engine and remove ignition key. Chock wheels.

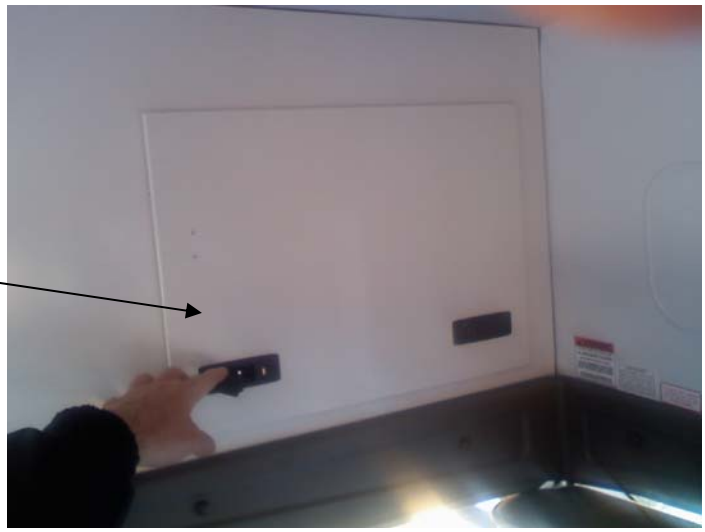

2. Unlatch and open access door above the driver seat. (See above photo)

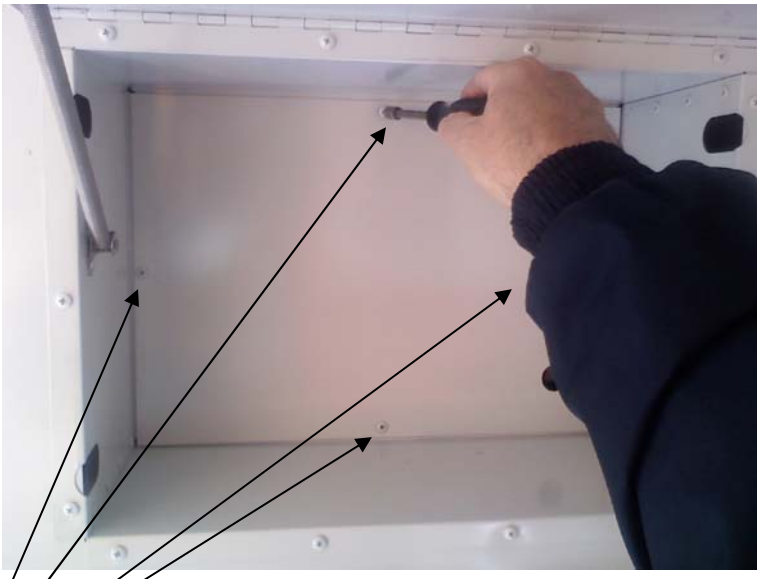

Remove Screws

3. Remove four screws that attach cover at rear of driver compartment. (See above photo)

Example: 2502B And 10 Amp Breaker Connected to Ignition Powered Position.

4. Inspect circuit 2502B and determine if it is supplied by ignition or battery power. With ignition key OFF verify voltage on circuit 2502B with a meter or test light.

5. If circuit 2502B is supplied by battery power, no further action required. Replace cover and place bus back in service.

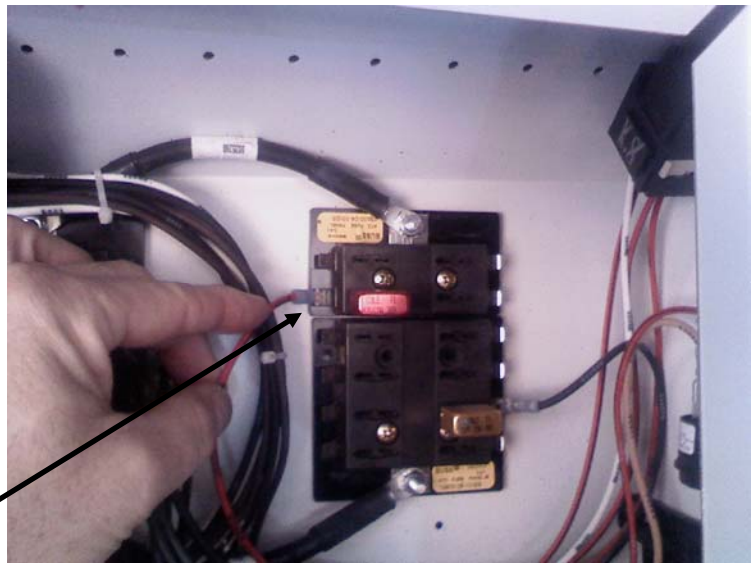

Example: 2502B And 10 Amp Breaker Relocated to Battery Powered Position.

6. If circuit 2502B is supplied by ignition power, relocate circuit 2502B and ten amp circuit breaker to any available fuse panel position that has battery power.

7. Verify feature operation: This lift interlock feature is a purchased system by Intermotive Products which consists of a control module, interface harness and a dash mounted display. The interface harness is used to connect to the bus body circuits and the Ford or GM chassis. The display monitors the inputs required from the chassis and the body to activate the lift. The inputs required to activate the lift are:
   1) Body ignition "on"
   2) Lift power switch "on"
   3) Park brake "set"
   4) Shifter is in the "park" position
   5) Lift door is "unlocked"
   After the lift is activated an output from the Intermotive module will keep the Ford or GM chassis from shifting (interlocked).
   This system meets FMVSS 403/404

8. Replace cover and place bus back in service.

BLUE BIRD

JUNE 15, 2010

TO: **BLUE BIRD DEALERS**

SUBJECT: **SERVICE BULLETIN S10SA LOW COOLANT SENSOR LEAKS**

MODELS AFFECTED: 2007-2011 MODEL YEAR ALL AMERICAN, VISION

The low coolant sensor on certain 2007-2011 model year All American and Vision buses manufactured from February 15, 2007 through March 01, 2010 may leak allowing engine coolant from the surge tank to leak into the engine harness connector and wick through harness to other components such as the engine ECM. Instructions for inspecting and correcting this condition are provided in Service Bulletin S10SA.

Time allowed to inspect low coolant sensor, remove seal and apply dielectric grease is 0.1 hour per bus.

Time allowed to inspect and replace low coolant sensor and replace engine harness, if needed, is 2 hours per bus. **If new sensor is installed, connector seal is not removed.**

Parts, if needed, for Service Bulletin S10SA must be ordered through Blue Bird Service parts.

A printout of your buses affected by Service Bulletin S10SA is attached.

Service Bulletin S10SA is being mailed direct to owners. Owners are being advised to contact their dealer for assistance, if needed.

Service Bulletin S10SA ends one (1) year from date of issue. Claims for repairs performed after the end date cannot be submitted to Blue Bird.

Questions regarding Service Bulletin S10SA should be directed to your Blue Bird Service Representative.

Sincerely,

Bill Coleman

Bill Coleman
Engineering Services
Blue Bird Corporation
478-822-2242
bill.coleman@blue-bird.com

Table of Contents

BLUE BIRD

June 15, 2010

Dear Blue Bird Owner,

The low coolant sensor on certain 2007-2011 model year All American and Vision buses manufactured from February 15, 2007 through March 01, 2010 may leak allowing engine coolant from the surge tank to leak into the engine harness connector and wick through harness to other components such as the engine ECM. Instructions for inspecting and correcting this condition are provided in Service Bulletin S10SA.

Your buses affected by Service Bulletin S10SA are identified by body number on the attached cover sheet.

Time allowed to inspect low coolant sensor, remove seal and apply dielectric grease is 0.1 hour per bus.

Time allowed to inspect and replace low coolant sensor and replace engine harness, if needed, is 2 hours per bus. **If new sensor is installed, connector seal is not removed.**

Parts, if required, must be ordered through your Blue Bird dealer.

You may contact your Blue Bird dealer to arrange to have this service bulletin performed. Or, if you prefer, you may perform this service bulletin yourself or have a qualified repair facility convenient to you perform it. A qualified technician should perform this procedure.

Service Bulletin S10SA ends one (1) year from date of issue.

Should you have any questions concerning this bulletin, please contact your Blue Bird dealer.

Sincerely,

Bill Coleman

Bill Coleman
Engineering Services
Blue Bird Corporation
478-822-2242

Low Coolant Sensor Leaks BULLETIN

Models Affected: 2007-2010 Model Year All American, Vision

ISSUE

The low coolant sensor may leak allowing engine coolant from surge tank to leak into engine harness connector and wick through harness to other components such as engine ECM.

CORRECTIVE ACTION

Inspect low coolant sensor and associated electrical connections and follow instructions provided.

PROCEDURE

WARNING: Always follow all Federal, State, Local and Shop safety standards and use proper safety equipment when performing these procedures. This procedure must be performed by a qualified automotive electrical technician.

1. Secure the vehicle and prepare it for access to the needed area.

2. Park vehicle on level surface. Apply the parking brake, remove key and chock wheels. Disconnect the batteries.

3. Locate low coolant sensor installed in engine coolant surge tank (See figure 1)

Figure 1

4. Disconnect the wiring harness connector from the low coolant sensor.

4.1 Inspect harness connector and sensor pins for signs of coolant.

4.2 If no sign of coolant is found, slide sensor harness connector rubber seal off connector (see seal in figure 2), apply dielectric grease to the connector pins and reconnect the low coolant sensor connector to the sensor without the seal installed and proceed to step 5. Retain harness connector rubber seal for future use if needed.

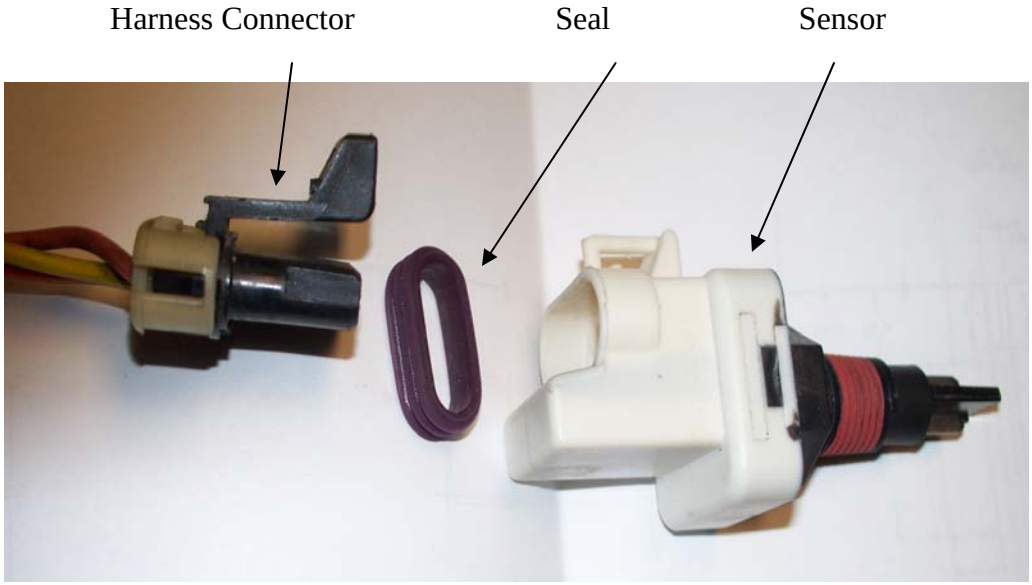

Figure 2

4.3 If sign of coolant is found in the connector or sensor pins (see figure 3), replace the leaking sensor with new sensor (10015356). When installing the new sensor, tighten the sensor using the hex nut portion of the sensor to 4.5-6 ft lbs. Clean the harness connector pins, and reconnect low coolant sensor connector to sensor. **If new sensor is installed, connector seal is not removed.**

Figure 3

4.4 Disconnect engine harness connector at the engine ECM and inspect for coolant.

4.5 If no coolant is found in the ECM connector or ECM, reconnect the engine ECM connector and torque the center retaining bolt of the ECM harness connector per the following values:

Caterpillar Engine- 53 in-lb +/- 9 in-lb
Cummins Engine- 25 in-lb +/- 2 in-lb

4.6 Proceed to step 5.

4.7 If coolant is found in the ECM connector (See Figure 4) or ECM, clean the ECM pins and replace the Blue Bird ECM harness. Reconnect the engine ECM connector and torque the center retaining bolt of the ECM harness connector per the following values:

Caterpillar Engine- 53 in-lb +/- 9 in-lb
Cummins Engine- 25 in-lb +/- 2 in-lb

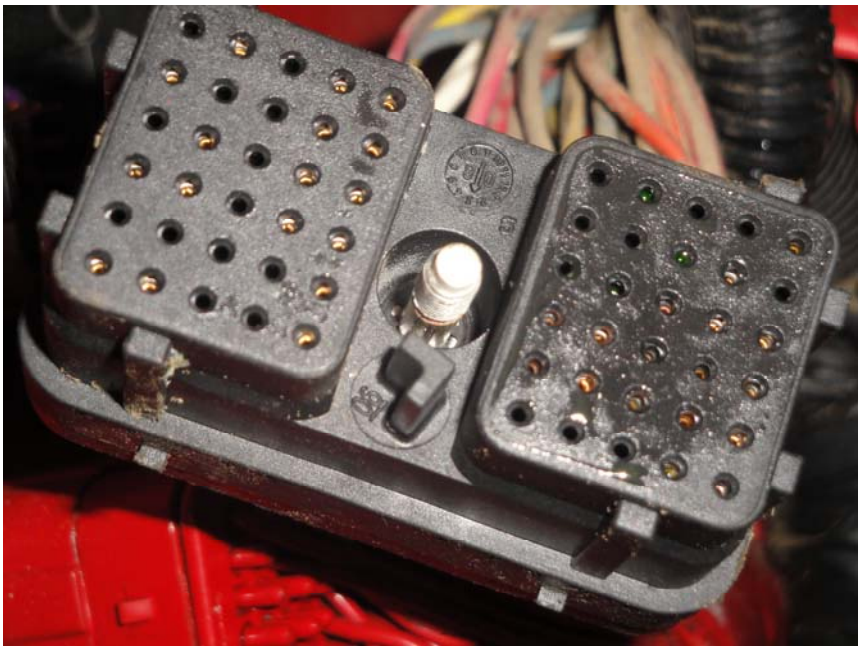

Figure 4

5.0 The procedure is complete and vehicle may be returned to service.

Parts List:

Quantity	P.N.	Description
1	10015356	Sensor, Coolant, Surge Tank
1	*	Permatex 22058, dielectric grease or equivalent
1	**	Blue Bird Engine Harness

* Purchase Locally
** Contact your local Blue Bird dealer for harness specific to your bus

SERVICE PROCEDURE

G-11518
SEPTEMBER 2011

SUBJECT: **SAFETY RECALL**
ALTERNATOR WIRING on certain BE and CE model school buses built 6/27/06 thru 3/23/11 with a MaxxForce 7 engine feature code 12NTH, 12NTD, 12NTE, 12NTG, 12VYY, or 12627 and alternator feature code 0008GGR, 0008GGM, 0008GWX, or 0008GEL.

DEFECT DESCRIPTION

The positive alternator cable may rub on the engine control module mounting bracket possibly compromising its insulation causing an electrical short. An electrical short may cause a fire possibly resulting in property damage, personal injury, or death.

MODELS INVOLVED

This Safety Recall involves certain BE and CE model school buses built 6/27/06 thru 3/23/11 with a MaxxForce 7 engine feature code 12NTH, 12NTD, 12NTE, 12NTG, 12VYY, or 12627 and alternator feature code 0008GGR, 0008GGM, 0008GWX, or 0008GEL.

PARTS INFORMATION

Part Number	Part Description	Quantity
306132C1 or Equivalent	Tie Strap – Rated At 250 lbs 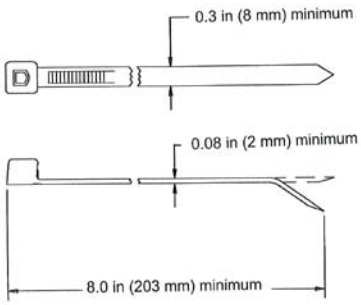	2

Part Number	Part Description	Quantity
2644027R1	Sleeve, Cable Insulating, Heat Shrink 17.8 mm x 50 Long	As Needed

SERVICE PROCEDURE

WARNING! PARK VEHICLE ON HARD FLAT SURFACE, TURN THE ENGINE OFF, SET THE PARKING BRAKE AND BLOCK THE WHEELS TO PREVENT THE VEHICLE FROM MOVING IN BOTH DIRECTIONS. FAILURE TO DO SO MAY RESULT IN PROPERTY DAMAGE, PERSONAL INJURY AND/OR DEATH.

WARNING! ALWAYS WEAR SAFE EYE PROTECTION WHEN PERFORMING VEHICLE MAINTENANCE. FAILURE TO DO SO MAY RESULT IN SERIOUS EYE INJURY.

WARNING! ALLOW COMPONENTS IN ENGINE COMPARTMENT TO COOL BEFORE SERVICING ENGINE OR VEHICLE. FAILURE TO DO SO MAY RESULT IN PROPERTY DAMAGE, PERSONAL INJURY AND/OR DEATH.

WARNING! KEEP FLAMES OR SPARKS AWAY FROM VEHICLE AND DO NOT SMOKE WHILE SERVICING THE VEHICLE'S BATTERIES. BATTERIES EXPEL EXPLOSIVE GASES. FAILURE TO DO SO MAY RESULT IN PROPERTY DAMAGE, PERSONAL INJURY, AND/OR DEATH.

WARNING! REMOVE THE GROUND CABLE FROM THE NEGATIVE TERMINAL OF THE BATTERY BOX BEFORE DISCONNECTING ANY ELECTRICAL COMPONENTS. ALWAYS CONNECT THE GROUND CABLE LAST. FAILURE TO DO SO MAY RESULT IN PROPERTY DAMAGE, PERSONAL INJURY, AND/OR DEATH.

1. Inspect and determine if the alternator cables are properly tie strapped to the engine control module mounting bracket. If so, service procedure is complete.

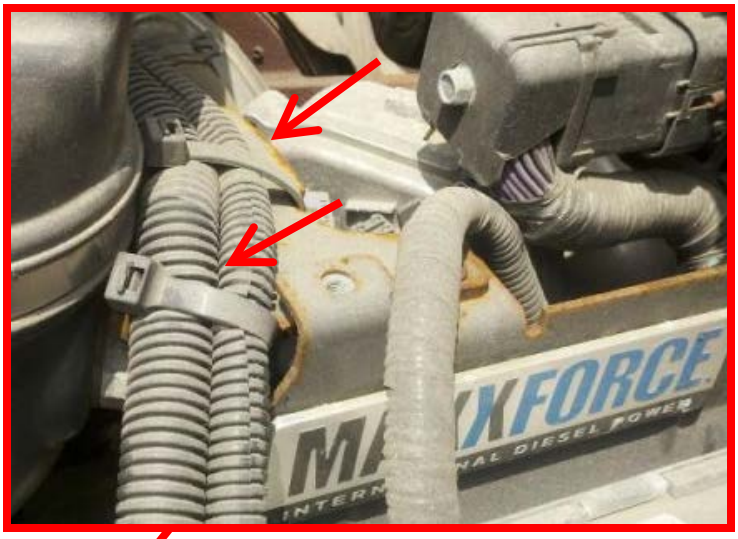

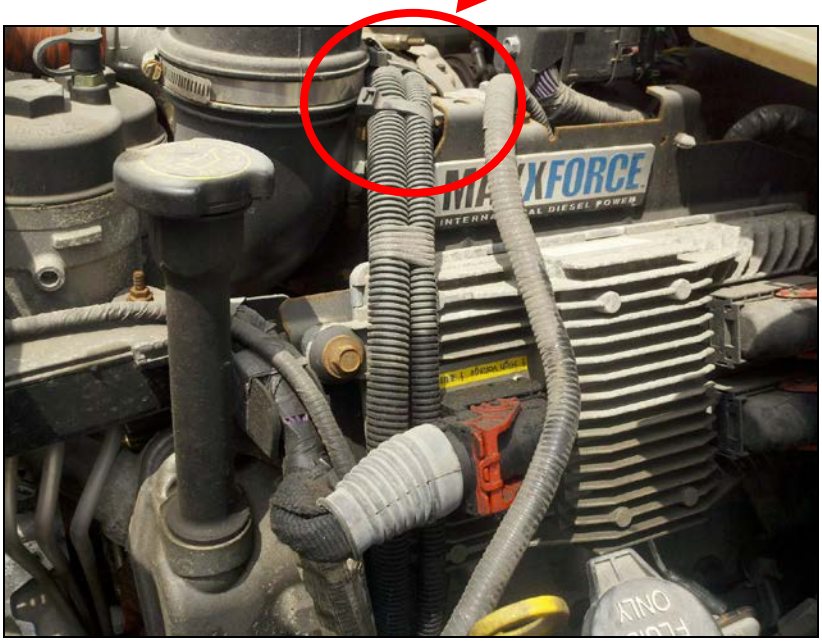

2. If cables are not properly tie strapped to the bracket determine if the insulation on either alternator cable is damaged due to rubbing on the engine control module mounting bracket. Repair the alternator cable insulation with heat shrink sleeve as necessary.

3. Tie strap the alternator cables to the engine control module mounting bracket.

END OF SERVICE PROCEDURE

LABOR INFORMATION

Operation Number	Description	Time
A40-11518-1	Inspect For Tie Straps No Repair Required	0.2
A40-11518-2	Inspect For Tie Straps No Cable Insulation Repair Install Tie Straps	0.3
A40-11518-3	Inspect For Tie Straps Repair Insulation On 1 Cable Install Tie Straps	0.6
A40-11518-4	Inspect For Tie Straps Repair Insulation On 2 Cables Install Tie Straps	0.7

CAMPAIGN IDENTIFICATION LABEL

Each vehicle corrected in accordance with this campaign must be marked with a CTS-1075 Campaign Identification Label.

Complete the label and attach on a clean surface next to the vehicle identification number (VIN) plate.

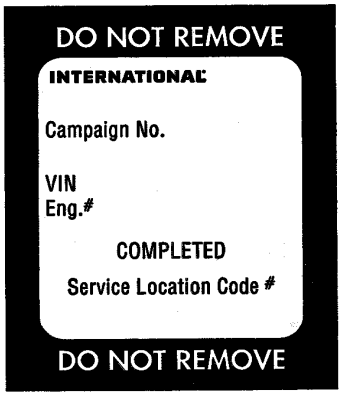

ADMINSTRATIVE/DEALER RESPONSIBILITIES

WARRANTY CLAIMS

Refer to Dealer Warranty Manual for procedures to conduct Recall Campaigns.

It is important that the Recall Coding be completed properly to assist in processing the warranty claim. Complete instructions will be found in the Warranty Manual, Section 7-1. Special attention should be given to Items 39 through 44:

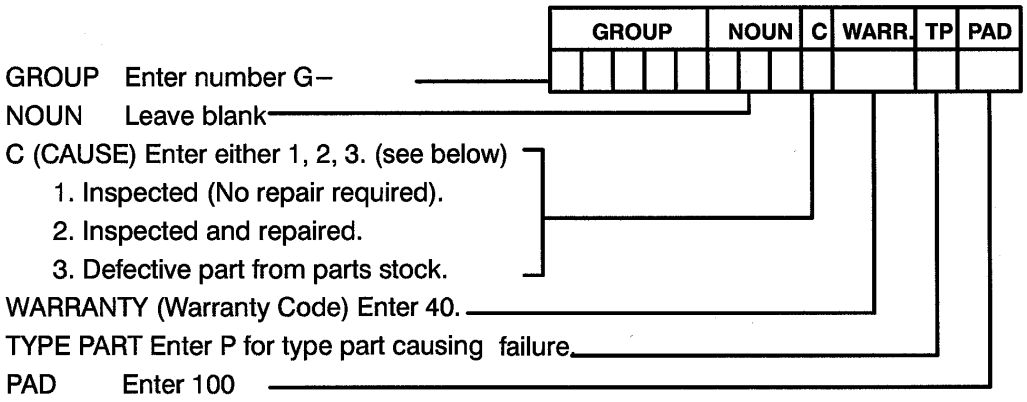

UNITED STATES AND POSSESSIONS

The National Traffic and Motor Vehicle Safety Act, as amended, provides that each vehicle that is subject to a vehicle recall campaign must be adequately repaired within a reasonable time after the owner has tendered it for repair. A failure to adequately repair within 60 days after a tender of a vehicle is prima facie evidence of failure to repair within a reasonable time. If the condition is not adequately repaired within 60 days, the owner may be entitled to replacement with an identical or reasonable equivalent vehicle at no charge, or to a refund of the purchase price less a reasonable allowance for depreciation.

Dealers must correct all vehicles subject to this campaign at no charge to the owner, regardless of mileage, age of vehicle, or ownership, from this time forward.

Dealers should proceed immediately to make necessary correction to units in inventory. All inventory vehicles subject to this recall campaign must be corrected prior to sale, transfer or delivery. If vehicles have been sold or transferred and you are in receipt of Customer Notification Letters and Authorization for Recall Service cards for those vehicles, the transfer location or customer must be notified immediately from your dealer location.

Dealers must make every effort to promptly schedule an appointment with each owner to repair his or her vehicle as soon as possible. However, consistent with

the customer notification, dealers are expected to complete the repairs on the mutually agreed upon service date.

Dealers involved in the recall process will be furnished a listing of owner names and addresses to enable them to follow up with owners and have the vehicles corrected. Use of this listing must be limited to this campaign because the list may contain information obtained from state motor vehicle registration records and the use of such motor vehicle registration data for purposes other than this campaign is a violation of law in several states.

CANADA

Dealers must correct all vehicles subject to this campaign at no charge to the owner, regardless of mileage, age of vehicle, or ownership, from this time forward.

Dealers should proceed immediately to make necessary correction to units in inventory. All inventory vehicles subject to this recall campaign must be corrected prior to sale, transfer or delivery. If vehicles have been sold or transferred and you are in receipt of Customer Notification Letters and Authorization for Recall Service cards for those vehicles, the transfer location or customer must be notified immediately from your dealer location.

Dealers must make every effort to promptly schedule an appointment with each owner to repair his or her vehicle as soon as possible. However, consistent with the customer notification, dealers are expected to complete the repairs on the mutually agreed upon service date.

Dealers involved in the recall process will be furnished a listing of owner names and addresses to enable them to follow up with owners and have the vehicles corrected. Use of this listing must be limited to this campaign because the list may contain information obtained from state motor vehicle registration records and the use of such motor vehicle registration data for purposes other than this campaign is a violation of law in several states.

EXPORT

Export Distributors should proceed immediately to make necessary correction to units in inventory. All inventory vehicles subject to this recall campaign must be corrected prior to sale, transfer or delivery. If vehicles have been sold or transferred and you are in receipt of Customer Notification Letters and Authorization for Recall Service cards for those vehicles, the transfer location or customer must be notified immediately from your distributor location.

Export Distributors are to submit warranty claims in the usual manner making reference to this recall number.

Export Distributors are expected to provide full cooperation and follow-up with respect to this important subject matter. If you have any questions or need further assistance, please contact the Regional Service Manager at your regional office.

NAVISTAR, INC

SERVICE PROCEDURE

G-11506
JULY 2011

SUBJECT: **SAFETY RECALL**
RETURN FUEL VALVE on certain BE and CE school buses built 5/27/10 thru 3/8/11 with a MaxxForce 7 engine.

DEFECT DESCRIPTION

A cap on the return fuel valve may become unsnapped allowing air to be drawn into the fuel system possibly resulting in engine hard start, no start, or stall conditions.

MODELS INVOLVED

This Safety Recall involves certain BE and CE school buses built 5/27/10 thru 3/8/11 with a MaxxForce 7 engine.

PARTS INFORMATION

Part Number	Part Description	Quantity
7085437C91	Kit, RFV and Fuel Filter	1

7085437C91 contains the following parts:

Part Number	Part Description	Quantity
1891668C94	Return Fuel Valve Assembly Kit	1
	Fuel Housing Cover Gasket	1
	Fuel O-Ring	1
	Fuel Thermal Bypass Valve Assembly	1
	M5 x 18 Torx Screw	7
	Snap Ring	1
	Instruction Sheet	1
1884207C91	Fuel Filter Elements Kit	1
	Fuel Cap Primary O-Ring	1
	Fuel Cap Secondary O-Ring	1
	Fuel Primary Element Assembly	1
	Primary Filter Assembly	1
	Instruction Sheet	1

SERVICE PROCEDURE

WARNING! PARK VEHICLE ON HARD FLAT SURFACE, TURN THE ENGINE OFF, SET THE PARKING BRAKE AND BLOCK THE WHEELS TO PREVENT THE VEHICLE FROM MOVING IN BOTH DIRECTIONS. FAILURE TO DO SO MAY RESULT IN PROPERTY DAMAGE, PERSONAL INJURY AND/OR DEATH.

WARNING! IF THE VEHICLE MUST BE RAISED, DO NOT WORK UNDER THE VEHICLE SUPPORTED ONLY BY JACKS. JACKS CAN SLIP OR FALL OVER, POTENTIALLY RESULTING IN PROPERTY DAMAGE, PERSONAL INJURY AND/OR DEATH.

WARNING! ALWAYS WEAR SAFE EYE PROTECTION WHEN PERFORMING VEHICLE MAINTENANCE. FAILURE TO DO SO MAY RESULT IN SERIOUS EYE INJURY.

WARNING! ALLOW COMPONENTS IN ENGINE COMPARTMENT TO COOL BEFORE SERVICING ENGINE OR VEHICLE. FAILURE TO DO SO MAY RESULT IN PROPERTY DAMAGE, PERSONAL INJURY AND/OR DEATH.

1. Drain the low-pressure fuel system.

   a. Clean the primary fuel filter cap, secondary fuel filter cap, and fuel filter module assembly to prevent debris entering fuel system when removing caps.

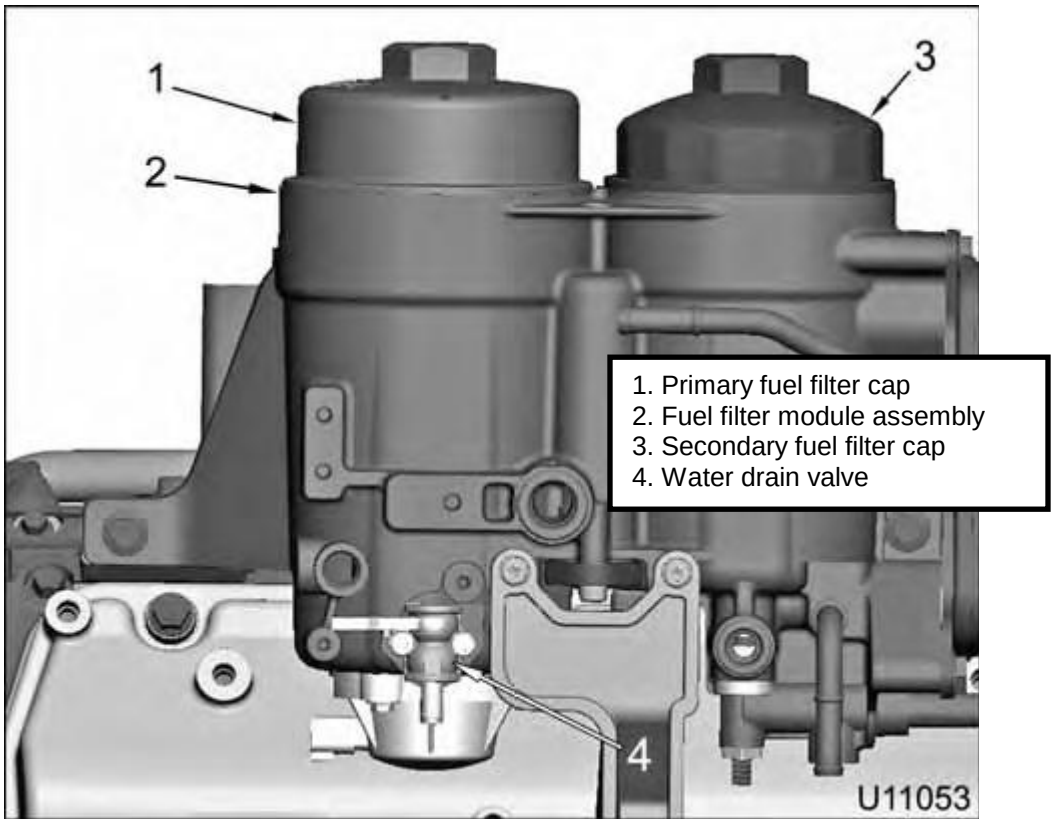

   b. Loosen the primary fuel filter cap counterclockwise three and one-half turns to vent the fuel filter module assembly.

   c. Attach a hose to the end of the water drain valve.

   d. Position a suitable container under the water drain valve and put end of hose into container.

   e. Open water drain valve and drain fuel.

   f. After fuel is drained remove container and recycle or dispose of fuel according to applicable regulations.

   g. Remove hose and close water drain valve.

   h. Turn the primary fuel filter cap clockwise to seat the cap to the fuel filter module assembly, but do not tighten to torque.

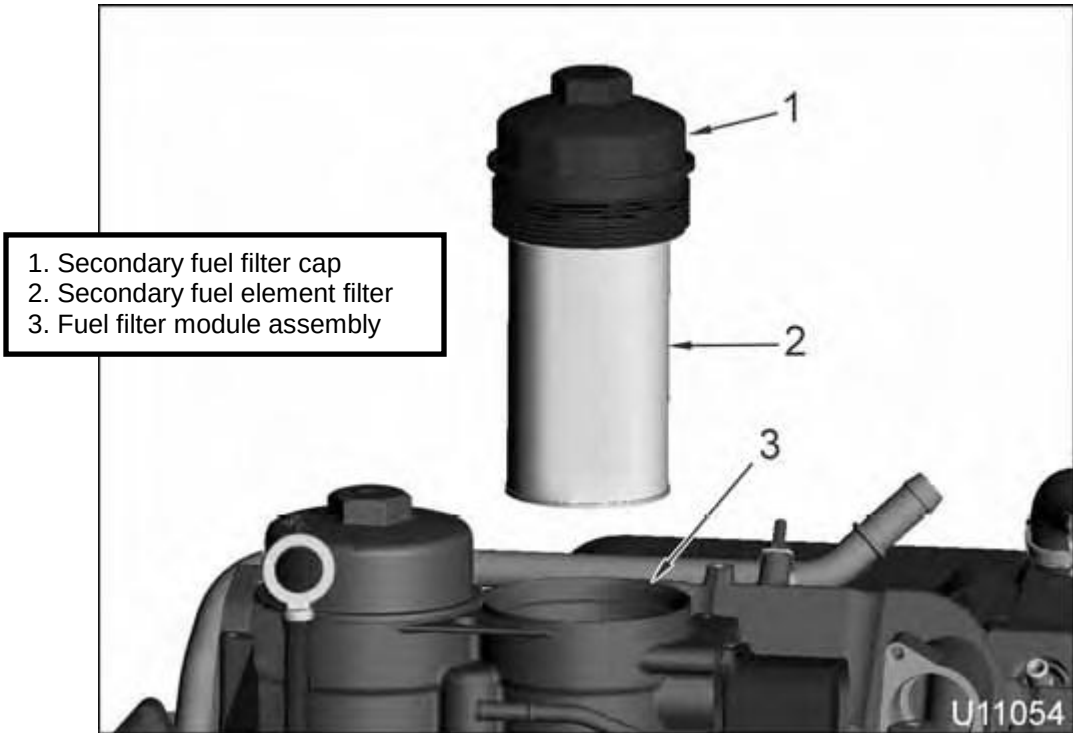

i. Remove the secondary fuel filter cap and fuel element filter to allow fuel to drain to the tank.

j. Reinstall the secondary fuel filter cap and fuel element filter to seat the cap to the fuel filter module assembly, but do not tighten to torque.

2. Install a new fuel thermal bypass valve assembly.

   a. Remove the fuel filter module housing.

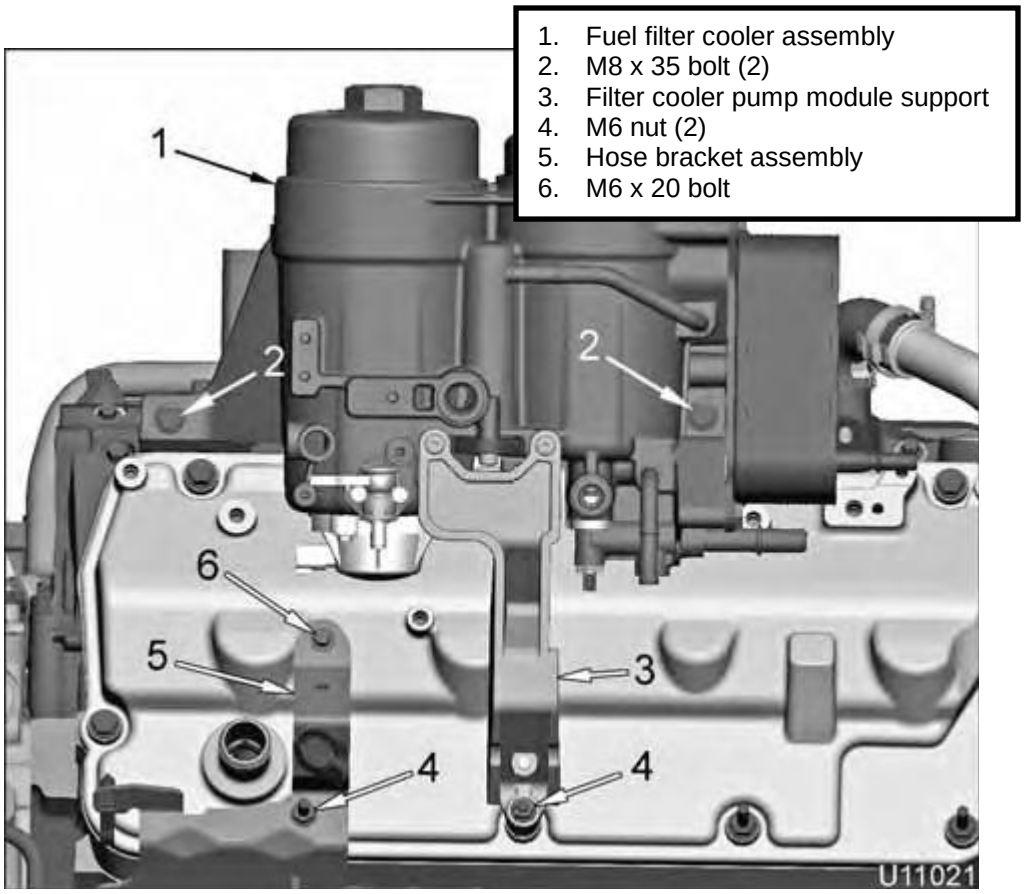

   i. Remove M6 nut from filter cooler pump module support.

   ii. Remove two M8 x 35 bolts that secure the fuel filter cooler assembly.

   iii. Remove fuel filter cooler assembly with filter cooler pump module support.

   iv. Remove M6 x 20 bolt, M6 nut, and the hose bracket assembly.

b. Remove seven M5 x 18 screws that secure the fuel housing cover to the fuel filter module housing.

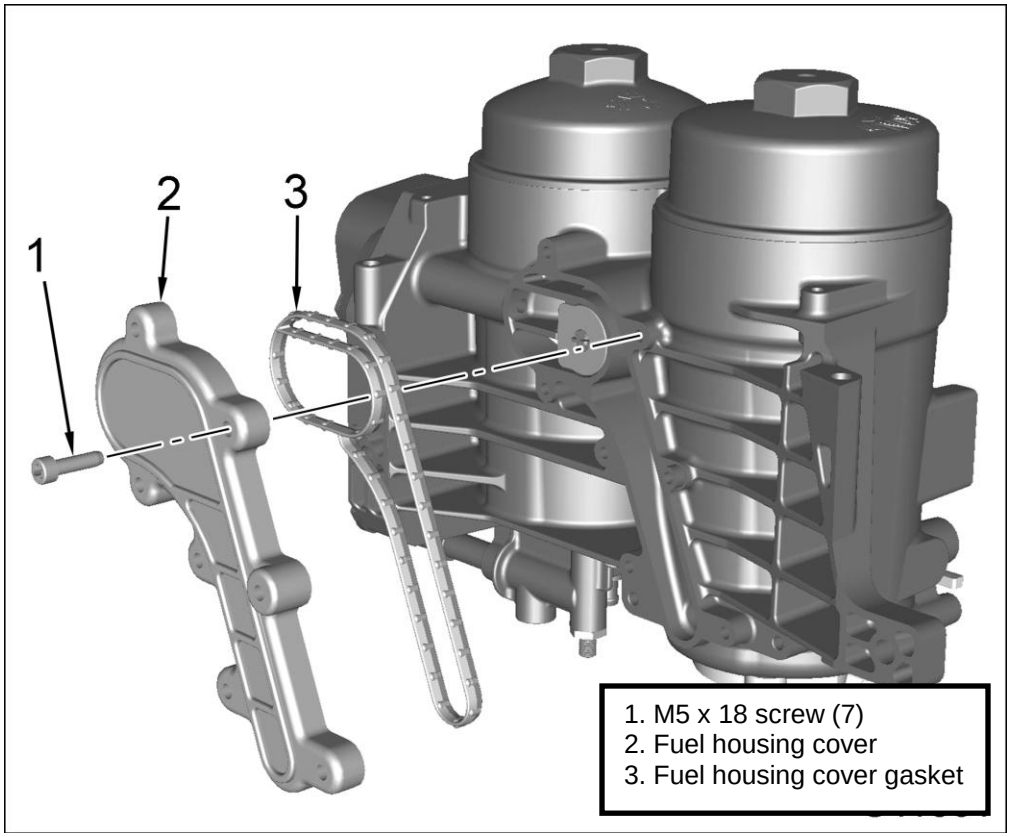

c. Remove and discard the fuel housing cover gasket.

d. Using a flat blade screw driver or needle nose pliers, remove the fuel thermal bypass valve assembly from fuel filter module housing. Care should be taken to prevent damage to the filter housing during the bypass valve removal.

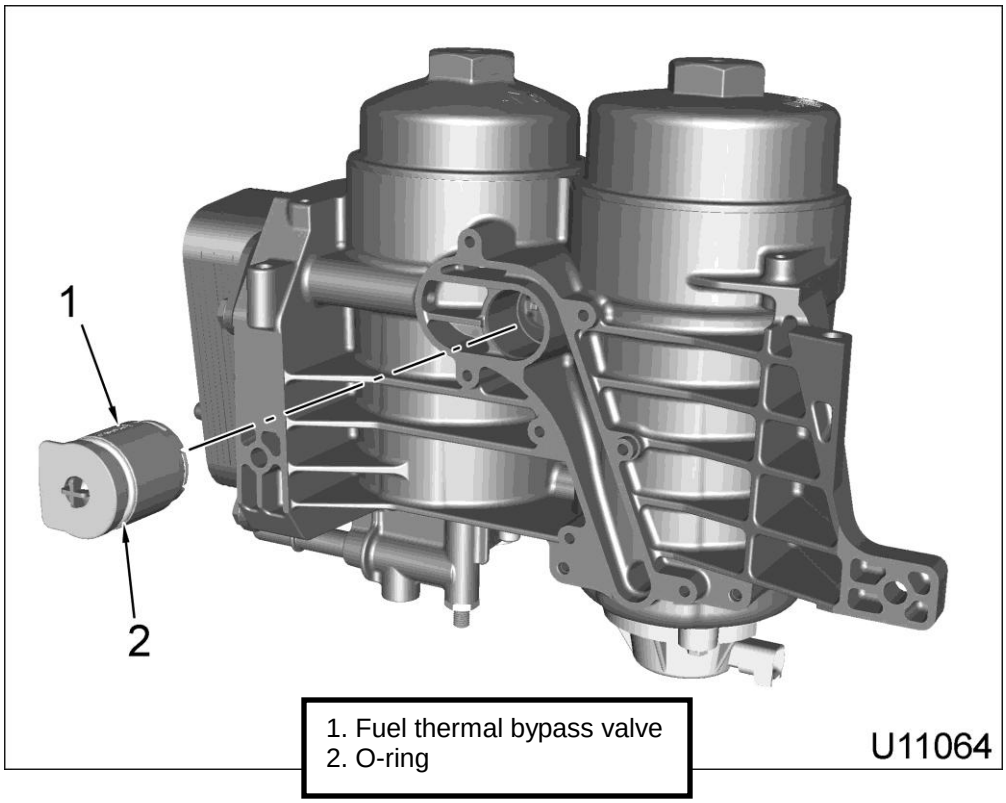

1. Fuel thermal bypass valve
2. O-ring

e. Discard the fuel thermal bypass valve assembly and fuel o-ring.

f. Use retaining ring pliers to insert snap ring into the fuel thermal bypass valve bore until the snap ring stops on the two cast ribs at 12:00 o'clock and 6:00 o'clock positions.

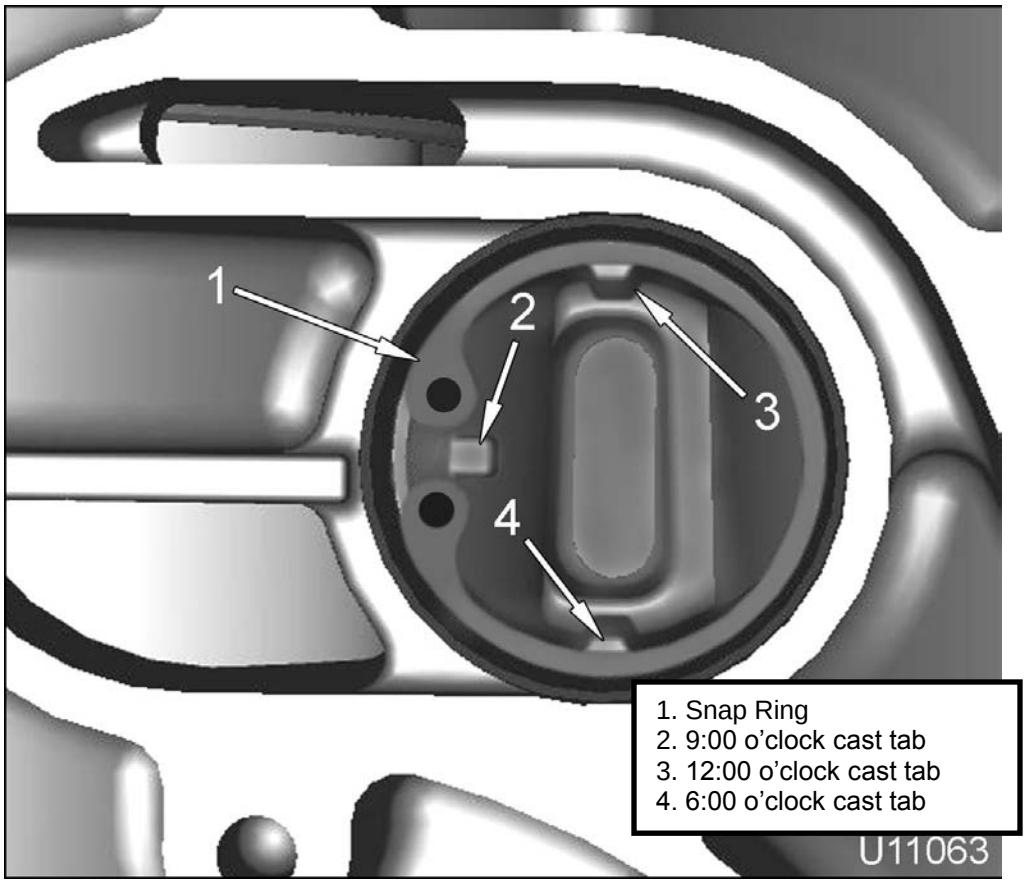

g. Center the opening of the snap ring on the cast tab at the 9:00 o'clock position.

h. Remove protective tie straps from fuel thermal bypass valve by cutting the outer tie strap first; then, slide the inner tie strap sideways off the fuel thermal bypass valve.

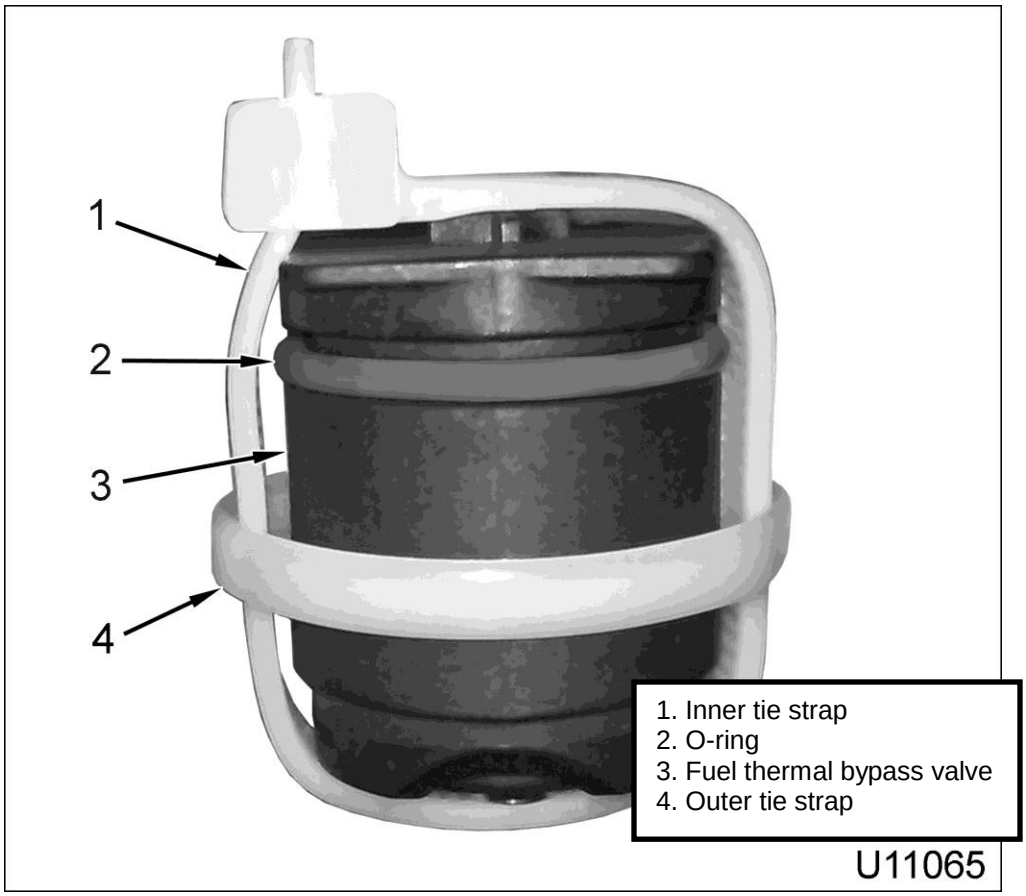

i. Lubricate new fuel o-ring with clean diesel fuel.

j. Insert new fuel thermal bypass valve assembly into valve bore until fully seated onto snap ring.

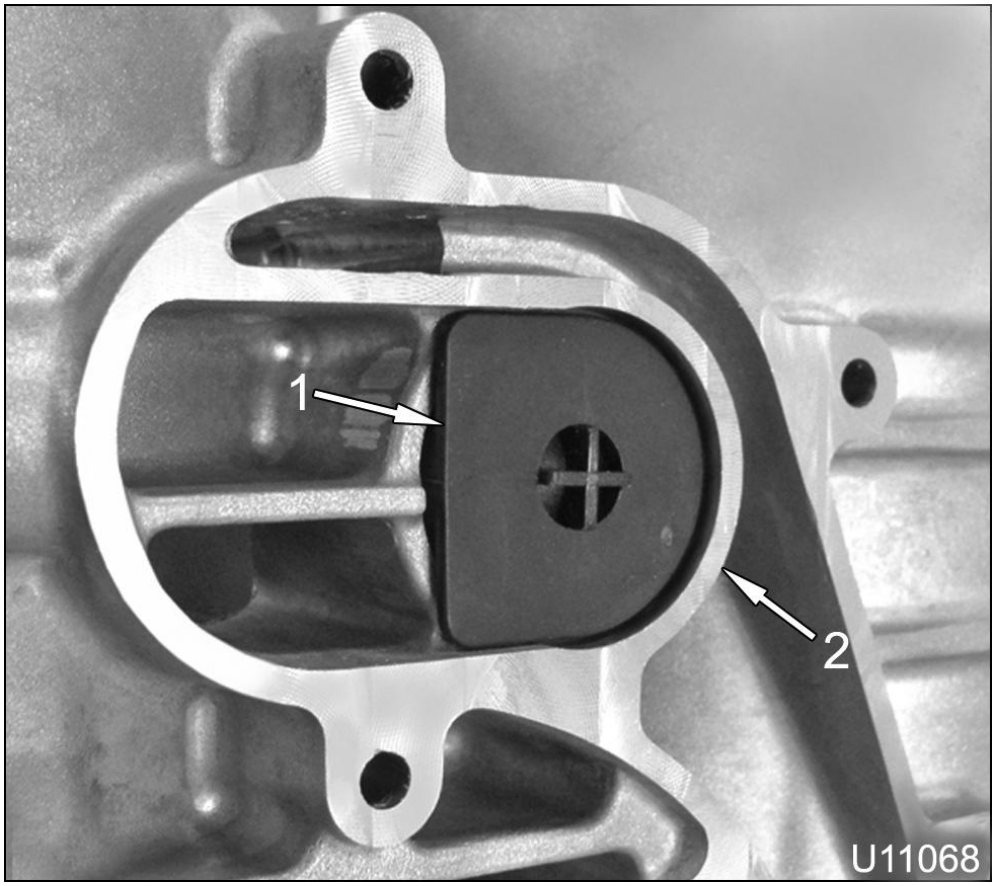

k. Install new fuel housing cover gasket, fuel housing cover, and seven M5 x 18 screws.

l. Tighten fuel housing cover screws to 5 N-m (45 lbf-in).

m. Install the fuel filter module housing.

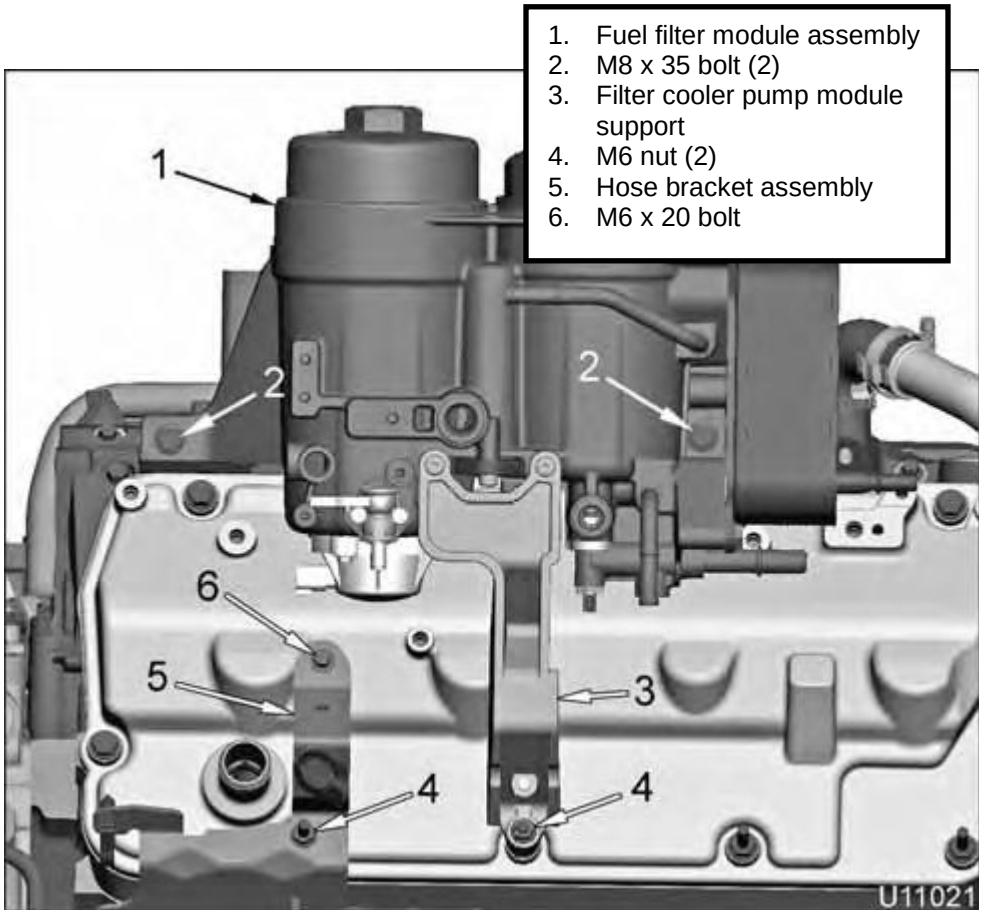

i. Position fuel filter and cooler assembly with filter cooler pump module support onto engine.

ii. Install two M8 x 35 bolts to secure the fuel filter cooler assembly and tighten bolts to 31 N-m (23 lbf-ft).

iii. Install M6 nut to secure filter cooler pump module support and tighten nut to 13 N-m (115 lbf-in).

iv. Install hose bracket assembly, M6 x 20 bolt, and M6 nut.

v. Tight M6 x 20 bolt and M6 nut to 13 N-m (115 lbf-in).

3. Remove and replace the primary filter assembly, secondary fuel element assembly, both cap o-rings, and primary fuel element o-ring.

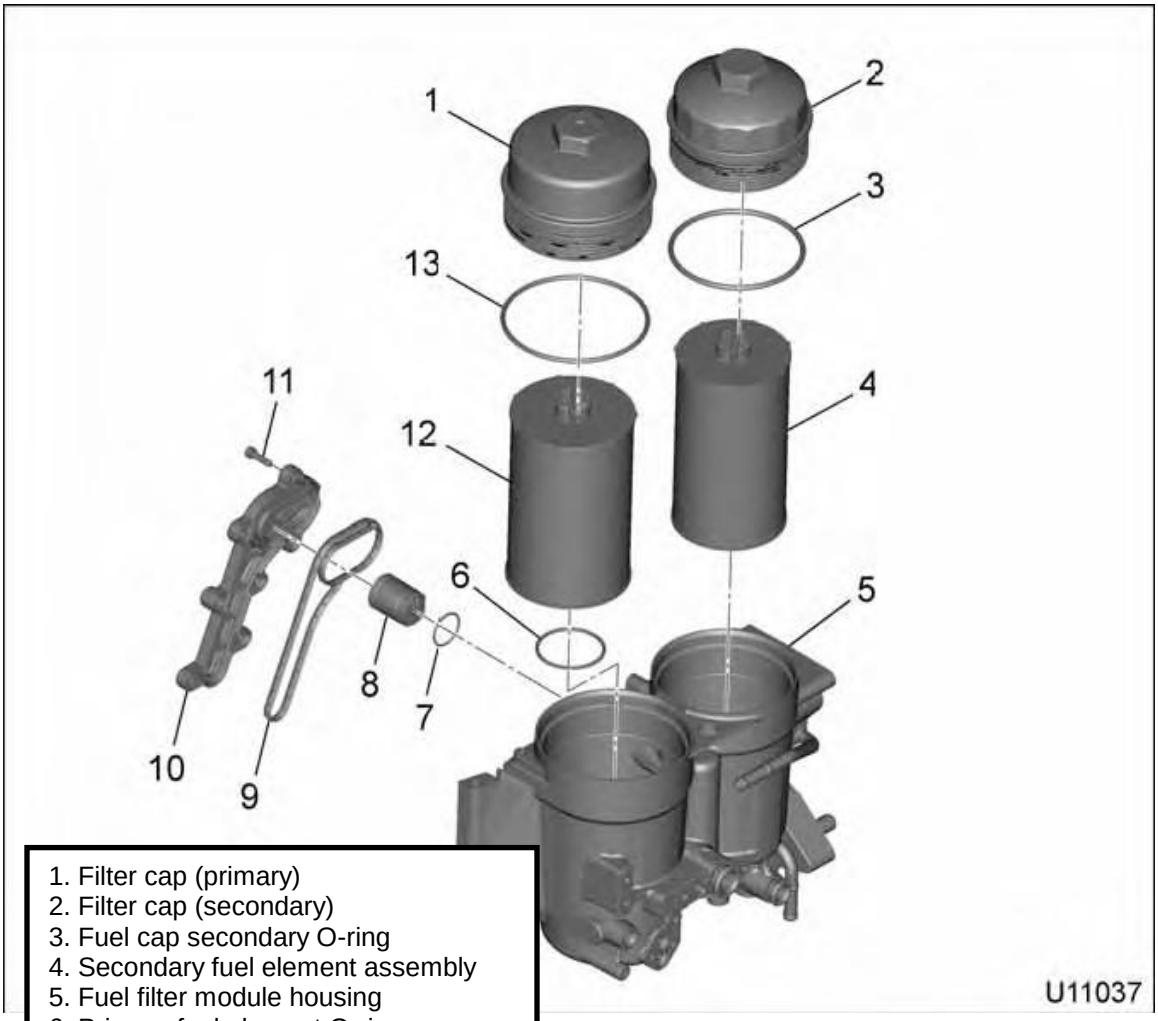

1. Filter cap (primary)
2. Filter cap (secondary)
3. Fuel cap secondary O-ring
4. Secondary fuel element assembly
5. Fuel filter module housing
6. Primary fuel element O-ring
7. Fuel O-ring
8. Fuel thermal bypass valve assembly
9. Fuel housing cover gasket
10. Fuel housing cover
11. M5 x 18 screw (7)
12. Primary filter assembly
13. Primary fuel cap O-ring

a. Remove primary fuel filter cap.

b. Remove and discard primary fuel cap O-ring, primary filter assembly, and primary fuel element O-ring.

c. Remove secondary fuel filter cap.

d. Remove and discard fuel cap secondary O-ring and secondary fuel element assembly.

e. Coat a new O-ring for the primary fuel filter cap with clean diesel fuel and install onto the fuel filter cap.

f. Attach fuel filter cap to a new filter assembly, by pushing the cap onto the filter assembly. The cap will snap onto filter assembly.

g. Coat the threads of the fuel filter cap with clean diesel fuel.

NOTE: Verify that the primary fuel element O-ring is installed on the bottom of the primary filter assembly.

• If the O-ring is loose or not installed, coat the O-ring with clean diesel fuel and install the O-ring in the bottom groove of the primary filter assembly.

• If the O-ring is installed, coat the O-ring with clean diesel fuel.

CAUTION: To prevent engine damage, slowly install the primary fuel filter cap and filter assembly into the fuel filter module housing to prevent distortion of the O-ring.

h. Slowly install the primary fuel filter cap and filter assembly into the fuel filter module housing.

i. Secure the fuel filter cap and filter assembly into the fuel filter module housing by turning the fuel filter cap clockwise until finger-tight.

j. Tighten the primary fuel filter cap to 50 N·m (37 lbf·ft).

k. Coat a new O-ring for the secondary fuel filter cap with clean diesel fuel and install onto the primary fuel filter cap.

l. Attach secondary fuel filter cap to a new fuel element assembly, by pushing the cap onto the fuel element assembly. The cap will snap into the element assembly.

m. Coat the threads of the fuel filter cap with clean diesel fuel.

n. Secure the fuel filter cap and fuel element assembly into the fuel filter module housing by turning the secondary fuel filter cap clockwise until finger-tight.

o. Tighten the secondary fuel filter cap to 40 N·m (29 lbf·ft)

4. Prime the low pressure fuel system.

a. Cycle engine ignition key.

- Key – On for 10 seconds.
- Key – Off for 15 seconds.
- Key – On for 10 seconds.
- Key – Off for 15 seconds.
- Key – On for 10 seconds.

b. Start the engine and check for leaks.

c. If leaks are found, shutdown the engine and correct the problem.

END OF SERVICE PROCEDURE

LABOR INFORMATION

Operation Number	Description	Time
A40-11506-1	Repair Return Fuel Valve	1.3
A40-11506-2	Add On: Vehicle Is Equipped With An Air Compressor	0.2

CAMPAIGN IDENTIFICATION LABEL

Each vehicle corrected in accordance with this campaign must be marked with a CTS-1075 Campaign Identification Label.

Complete the label and attach on a clean surface next to the vehicle identification number (VIN) plate.

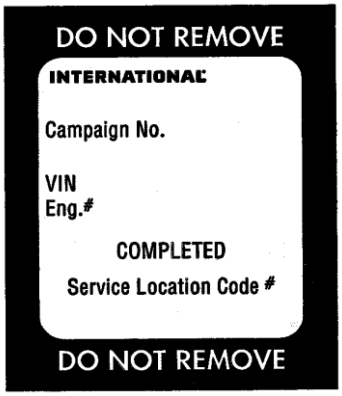

ADMINSTRATIVE/DEALER RESPONSIBILITIES

WARRANTY CLAIMS

Refer to Dealer Warranty Manual for procedures to conduct Recall Campaigns.

It is important that the Recall Coding be completed properly to assist in processing the warranty claim. Complete instructions will be found in the Warranty Manual, Section 7-1. Special attention should be given to Items 39 through 44:

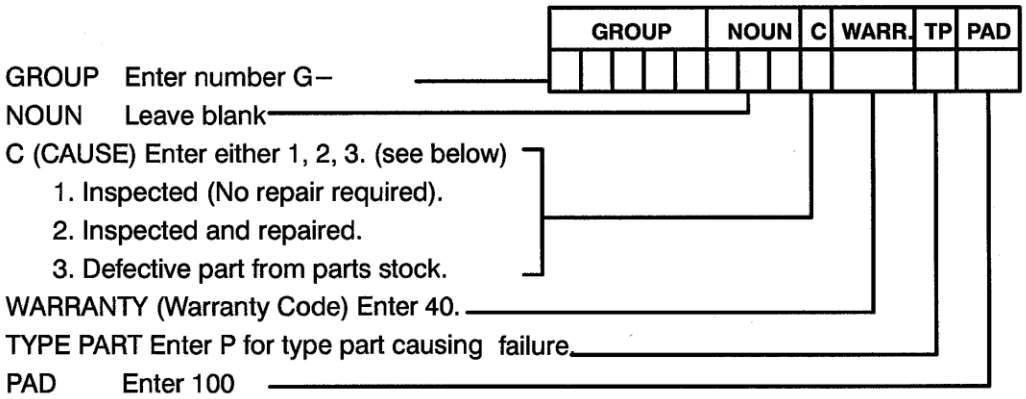

UNITED STATES AND POSSESSIONS

The National Traffic and Motor Vehicle Safety Act, as amended, provides that each vehicle that is subject to a vehicle recall campaign must be adequately repaired within a reasonable time after the owner has tendered it for repair. A failure to adequately repair within 60 days after a tender of a vehicle is prima facie evidence of failure to repair within a reasonable time. If the condition is not adequately repaired within 60 days, the owner may be entitled to replacement with an identical or reasonable equivalent vehicle at no charge, or to a refund of the purchase price less a reasonable allowance for depreciation.

Dealers must correct all vehicles subject to this campaign at no charge to the owner, regardless of mileage, age of vehicle, or ownership, from this time forward.

Dealers should proceed immediately to make necessary correction to units in inventory. All inventory vehicles subject to this recall campaign must be corrected prior to sale, transfer or delivery. If vehicles have been sold or transferred and you are in receipt of Customer Notification Letters and Authorization for Recall Service cards for those vehicles, the transfer location or customer must be notified immediately from your dealer location.

Dealers must make every effort to promptly schedule an appointment with each owner to repair his or her vehicle as soon as possible. However, consistent with

the customer notification, dealers are expected to complete the repairs on the mutually agreed upon service date.

Dealers involved in the recall process will be furnished a listing of owner names and addresses to enable them to follow up with owners and have the vehicles corrected. Use of this listing must be limited to this campaign because the list may contain information obtained from state motor vehicle registration records and the use of such motor vehicle registration data for purposes other than this campaign is a violation of law in several states.

CANADA

Dealers must correct all vehicles subject to this campaign at no charge to the owner, regardless of mileage, age of vehicle, or ownership, from this time forward.

Dealers should proceed immediately to make necessary correction to units in inventory. All inventory vehicles subject to this recall campaign must be corrected prior to sale, transfer or delivery. If vehicles have been sold or transferred and you are in receipt of Customer Notification Letters and Authorization for Recall Service cards for those vehicles, the transfer location or customer must be notified immediately from your dealer location.

Dealers must make every effort to promptly schedule an appointment with each owner to repair his or her vehicle as soon as possible. However, consistent with the customer notification, dealers are expected to complete the repairs on the mutually agreed upon service date.

Dealers involved in the recall process will be furnished a listing of owner names and addresses to enable them to follow up with owners and have the vehicles corrected. Use of this listing must be limited to this campaign because the list may contain information obtained from state motor vehicle registration records and the use of such motor vehicle registration data for purposes other than this campaign is a violation of law in several states.

EXPORT

Export Distributors should proceed immediately to make necessary correction to units in inventory. All inventory vehicles subject to this recall campaign must be corrected prior to sale, transfer or delivery. If vehicles have been sold or transferred and you are in receipt of Customer Notification Letters and Authorization for Recall Service cards for those vehicles, the transfer location or customer must be notified immediately from your distributor location.

Export Distributors are to submit warranty claims in the usual manner making reference to this recall number.

Export Distributors are expected to provide full cooperation and follow-up with respect to this important subject matter. If you have any questions or need further assistance, please contact the Regional Service Manager at your regional office.

NAVISTAR, INC

SERVICE PROCEDURE

G-11511
January 2012

SUBJECT: **SAFETY RECALL**
BATTERY CABLES on certain RE model school buses built 2/4/10 thru 6/16/11 with a 2010 exhaust emissions engine feature code 510974.

DEFECT DESCRIPTION

The battery cables may rub on the hydraulic cooler reservoir mounting bracket possibly resulting in an electrical short. An electrical short may cause a fire possibly resulting in property damage, personal injury, or death.

MODELS INVOLVED

This Safety Recall involves certain RE model school buses built 2/4/10 thru 6/16/11 with a 2010 exhaust emissions engine feature code 510974.

PARTS INFORMATION

Part Number	Part Description	Quantity
8900221R91	Kit, SR11510 & 11, Group 8D Battery Pkg	1
8900222R91	Kit, SR11510 & 11, Group 31 Battery Pkg	1

The repair kits contain the following parts:

Part Number	Part Description	Quantity	
		8900221R91	8900222R91
3547776C1	BOLT, M8X20 FINISH PER TMS-4518 TYPE I	1	1
934309R1	WASHER, LOCK M8	1	1
3554554C1	GUIDE, BRK HOSE & CABLE, DUAL SWIVEL SADDLE SPACER SIZE 5 INSERT MOLDED	4	3
1677372C1	CLAMP,PIPE, SGL-CUSHIONED 2 1/2 I.D. W/0.406 MTG HOL	1	1
2041341C1	SADDLE,CLAMP, CABLE LOCK MOUNT 1/4" HARDWARE	2	2
3627806C2	EXTENSION, CLIP	1	1
250537C1	EXTENSION, CLIP	3	2
3516934C1	STRAP,CABLE LOCK, 20 IN 250 LB	28	22
2002176C2	EXTENSION, CLIP	1	1
3553742C1	GUIDE, BRK HOSE & CABLE, 2-WAY SADDLE MOUNT FOR 6 MM HEX HD BOLTS	9	7
2012155C1	CLIP, SPRING TYPE 5/16"	1	1
454541C1	EXTENSION, CLIP	2	0
431193C1	EXTENSION,CLIP	0	1
9413979	NUT, 3/8-16 UNC	1	1
24841R1	BOLT, HH 3/8-16UNC X 1 1/2,PHC GRADE	1	1
25709R1	WASHER, HARDENED 3/8" - 0.406 ID X 0.812 OD ZND	1	1
2212199C1	GROMMET, 3 INCH	2	0
2212509C1	PLATE, BATTERY GROMMET	2	0
456107C1	SCREW, SELF-DRILLING PAN HD CR #10-16 X 1/2	8	0
25483R1	BOLT 1/4" X 1"	15	10
120380	WASHER, LOCK 1/4"	15	10
25519R1	NUT, HEX TYPE 8 1/4" UNC	15	10
3932762C1	SUPPORT, ASSY, RADIATOR/HYDRAULIC LINES	1	1

SERVICE PROCEDURE

WARNING! PARK VEHICLE ON HARD FLAT SURFACE, TURN THE ENGINE OFF, SET THE PARKING BRAKE AND BLOCK THE WHEELS TO PREVENT THE VEHICLE FROM MOVING IN BOTH DIRECTIONS. FAILURE TO DO SO MAY RESULT IN PROPERTY DAMAGE, PERSONAL INJURY AND/OR DEATH.

WARNING! IF THE VEHICLE MUST BE RAISED, DO NOT WORK UNDER THE VEHICLE SUPPORTED ONLY BY JACKS. JACKS CAN SLIP OR FALL OVER, POTENTIALLY RESULTING IN PROPERTY DAMAGE, PERSONAL INJURY AND/OR DEATH.

WARNING! ALWAYS WEAR SAFE EYE PROTECTION WHEN PERFORMING VEHICLE MAINTENANCE. FAILURE TO DO SO MAY RESULT IN SERIOUS EYE INJURY.

WARNING! ALLOW COMPONENTS IN ENGINE COMPARTMENT TO COOL BEFORE SERVICING ENGINE OR VEHICLE. FAILURE TO DO SO MAY RESULT IN PROPERTY DAMAGE, PERSONAL INJURY AND/OR DEATH.

WARNING! KEEP FLAMES OR SPARKS AWAY FROM VEHICLE AND DO NOT SMOKE WHILE SERVICING THE VEHICLE'S BATTERIES. BATTERIES EXPEL EXPLOSIVE GASES. FAILURE TO DO SO MAY RESULT IN PROPERTY DAMAGE, PERSONAL INJURY, AND/OR DEATH.

WARNING! REMOVE THE GROUND CABLE FROM THE NEGATIVE TERMINAL OF THE BATTERY BOX BEFORE DISCONNECTING ANY ELECTRICAL COMPONENTS. ALWAYS CONNECT THE GROUND CABLE LAST. FAILURE TO DO SO MAY RESULT IN PROPERTY DAMAGE, PERSONAL INJURY, AND/OR DEATH.

FOR VEHILE WITH GROUP 31 BATTERIES:

(For 8D Battery Procedure See Page 11)

1. Open battery compartment and disconnect frame and starter negative battery cable and clean power harness connector.

2. Inspect negative and positive battery cable routing path from the rear of the battery box to the starter. Cables that are routed over or between the coolant pipes will require removal from the starter to allow routing per the following steps. Cables that are routed under (3) the coolant pipes will not require removal from the starter attachment points (Figure 1).

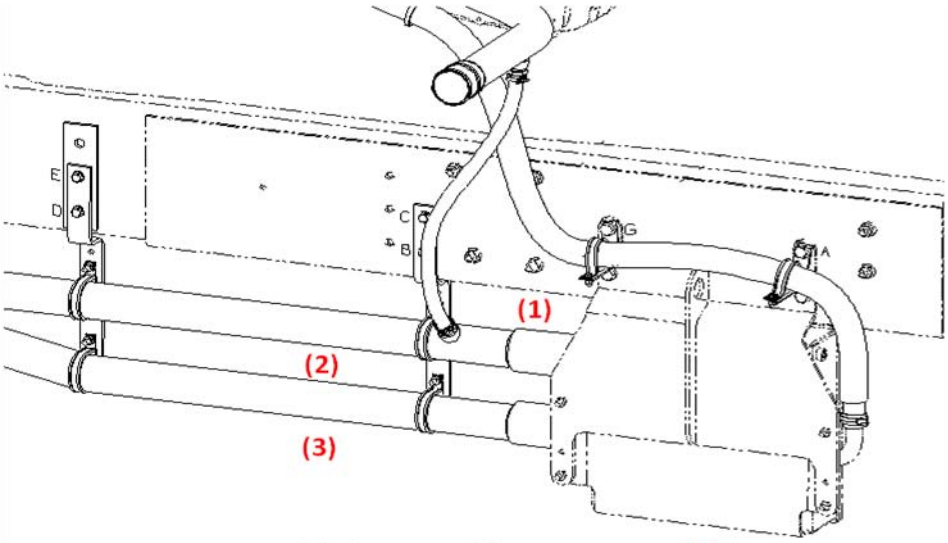

Possible battery cable routing, over **(1)**, between **(2)** or under **(3)** coolant pipes.

Figure 1

3. Remove all clipping points currently in place on the negative and positive battery cables from the exit point of the battery box to the starter.

   NOTE: If unit is equipped with an ammeter sensor on the negative battery cable, clip points may need to be removed to complete the following process and reinstalled at conclusion of repairs.

4. Remove negative and positive battery cables from the starter if cable(s) are routed over or between the coolant pipes as outlined in step 2.

5. Remove coolant pipe and hydraulic hose p-clamps from frame mounted bracket rearward of the hydraulic fluid reservoir. Remove bracket from frame rail mounting points (3/8" hardware). Reinstall replacement bracket (3932762C1) and p-clamps. (Figure 2) Install a large dual saddle (3553742C1, hardware 25483R1, 120380 and 25519R1) to the top of the lower bracket. Saddle will be tightened in step 13 (Figure 3).

   NOTE: Bracket installation can be performed by placing the bracket lengthwise between the frame and upper coolant pipe then rotate the bracket into final position.

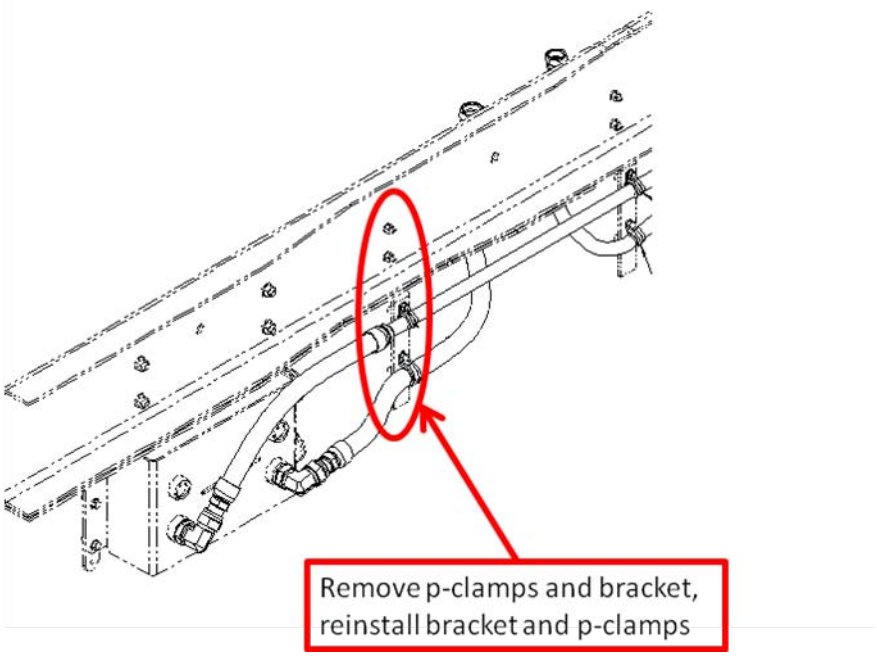

Figure 2

Figure 3

6. Loosely install single saddle (2041341C1, hardware 25483R1, 120380 and 25519R1) on extension clip (2002176C2) and install assembly to side of engine block using M8 bolt (3547776C1) and lock washer (934309R1). Saddle will be tightened in step 13 (Figure 4).

Figure 4

7. Install p-clamp (1677372C1) around lower coolant pipe approximately 8”-10” rearward of the frame mounted bracket replaced in step 5 and loosely install large dual saddle (3553742C1, hardware 25483R1, 120380 and 25519R1). Final location of p-clamp will be determined during final clipping of the battery cables. Saddle will be tightened in step 13 (Figure 5).

Figure 5

8. Remove upper rear hydraulic fluid reservoir mounting bolt (located between coolant pipes) and discard. Loosely install large dual saddle (3553742C1, hardware 25483R1, 120380 and 25519R1) on extension clip (3627806C2) and install assembly with new mounting hardware (9413979, 24841R1 and 25709R1). Saddle will be tightened in step 13 (Figure 6).

Figure 6

9. Assemble a single saddle (2041341C1) and large dual saddle (3553742C1, hardware 25483R1, 120380 and 25519R1) to spring clip (2012155C1) and install assembly on the rear upper slanted edge of the reservoir mounting bracket. Single saddle clamp is to be installed on the top, large dual saddle on the lower side of the spring clip. In the event edge trim was installed on the intended mounting surface, remove edge trim and discard. Tighten saddles in the position as shown in the below figure (Figure 7).

Figure 7

10. Loosely install large dual saddle (3553742C1, hardware 25483R1, 120380 and 25519R1) on extension clip (431193C1). Remove 12mm nut located above the hydraulic reservoir mounting bracket, install extension clip assembly as shown below and reinstall nut. Saddle will be tightened in step 13 (Figure 8).

Figure 8

If unit is equipped with battery box mounted disconnect switch, option code 49BVD, complete the following steps, If unit is not equipped with the disconnect switch, proceed to step 11.

a) Mark and drill extension clip mounting point. Inboard reinforcement leg, from rear of box, 6” forward and 3/4” down from the bottom of the box drill a 5/16” hole (Figure 9).
b) Loosely install large dual saddle (3553742C1, hardware 25483R1, 120380 and 25519R1) on extension clip (250537C1, hardware 25483R1, 120380 and 25519R1) and install assembly in the hole drilled in step 10. Saddle will be tightened in step 13 (Figure 9).

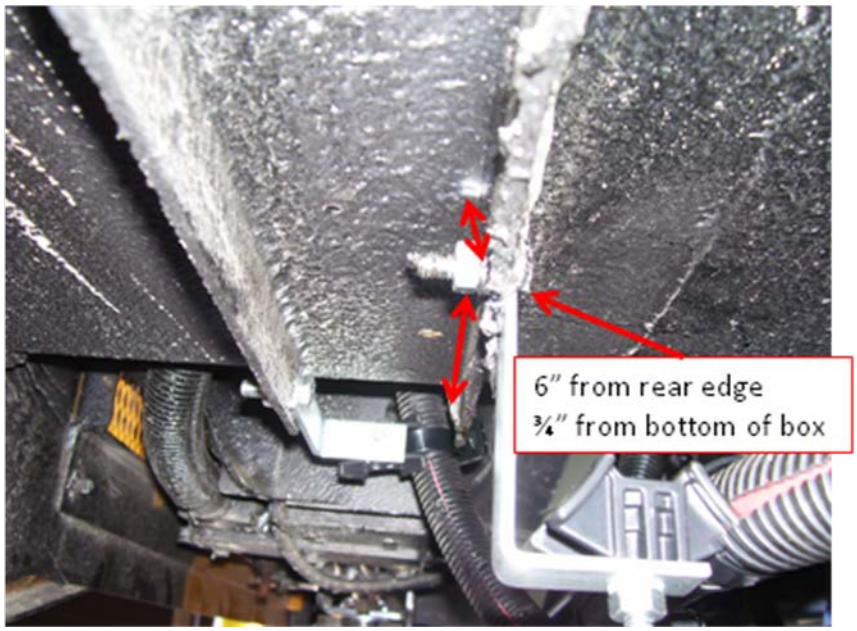

Figure 9

c) Mark and drill extension clip mounting point. Outboard reinforcement leg, from rear of box, 1” forward and 3/4” down from the bottom of the box drill a 5/16” hole (Figure 10).
d) Loosely install large dual saddle (3553742C1, hardware 25483R1, 120380 and 25519R1) on extension clip (250537C1, hardware 25483R1, 120380 and 25519R1) and install assembly in the hole drilled in step 10c. Saddle will be tightened in step 13 (Figure 10).

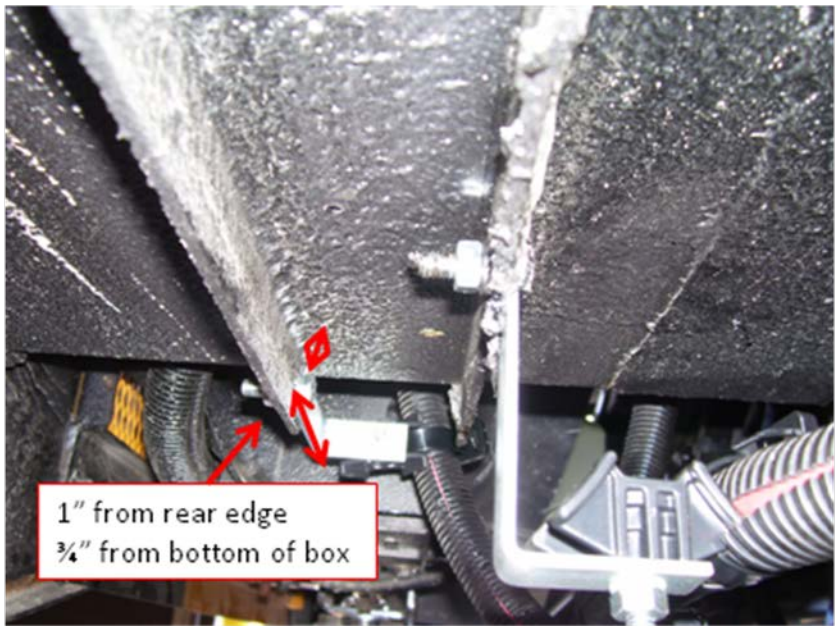

Figure 10

11. Inspect negative and positive battery cable to determine if any abrasion point caused insulation chafe requiring repair.

a. If no insulation chafe is found proceed to step 12.
b. If insulation chafe is found, use dual wall heat shrink (8900214R91) on the affected cable to repair the chafe. Installation can be completed by removing the protective conduit cover, slide the heat shrink to the affected area and heat as required.
c. If insulation chafe is found resulting in a condition requiring cable replacement (copper damage), open a case file and attach pictures of the affected area for repair instructions.

12. With the battery box tray fully extended and battery cables positioned for connection, install tie-straps at all clipping points beginning at the starter. All tie-straps used are ½", part number 3516934C1, unless otherwise stated. During installation of the remaining saddle clamp and tie-straps, ensure the cables are positioned eliminating contact to abrasion points and contact between the negative and positive cable. Prior to final tightening of the tie-straps, ensure cables are correctly positioned, and no abrasion points exist. Battery cables should make contact with clip point hardware only.

a. Reconnect battery cable to starter connection points.
b. Install a double swivel saddle (3554553C1) between the negative and positive cable near the rear of the starter (Figure 11).

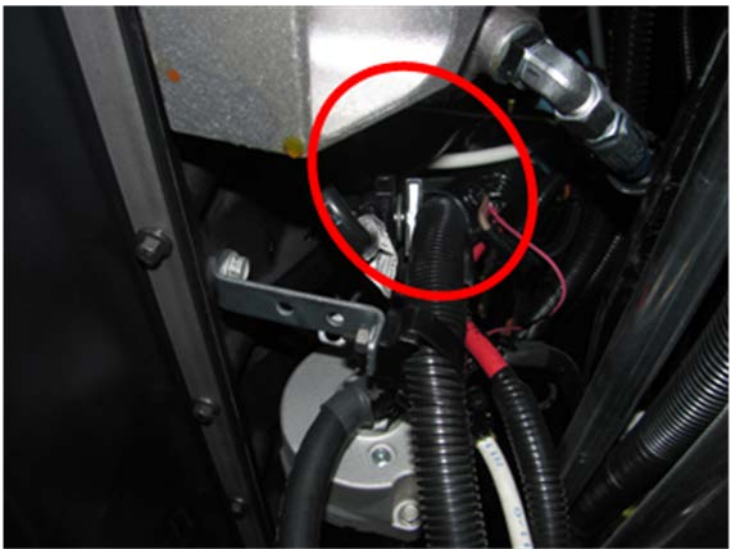

Figure 11

c. Install tie-strap to positive cable to the engine block mounted extension clip and saddle (Figure 4).
d. Install tie straps to negative and positive cables to the lower coolant pipe p-clamp. Position p-clamp to allow consistent routing of the

battery cables to eliminate any abrasion points prior to final tightening (Figure 5).

e. Install tie-strap to the negative and positive cables to the frame mounted coolant pipe bracket (Figure 3).
f. Install tie-straps to the negative and positive cables to the reservoir mounted extension clip (Figure 6).
g. Install tie-straps to the negative and positive cables to the spring clip (Figure 7).
h. Install tie strap to clean power harness to the single saddle mounted on the spring clip (Figure 7).
i. Install tie-strap to clean power harness to positive cable between rear of the battery box and spring clip.
j. Install tie-straps to the negative cable to the frame mounted extension clip (Figure 8).
k. If unit was equipped with disconnect switch, install tie-straps to the negative and positive cables to the additional bottom of battery box saddles (Figure 9 and 10). Inspect overall battery cable routing and add additional double swivel saddle (3554554C1) to eliminate any potential contact between battery cables (Figure 12).

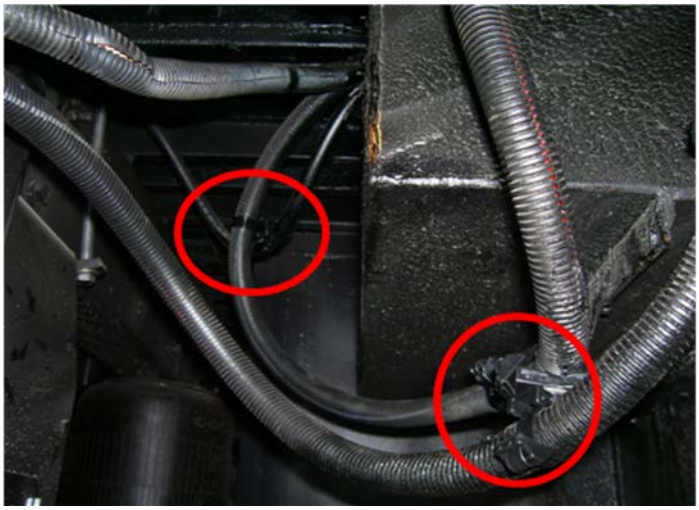

Figure 12

13. Verify all tie-straps and mounting hardware are tight and all tie-straps have been trimmed.

14. Reconnect battery cables and clean power harness.

15. Reapply grafo grease to the battery and starter connections.

FOR VEHICLES WITH 8D BATTERIES:

(For Group 31 Battery Procedure See Page 3)

1. Open battery compartment and disconnect negative and positive battery cable and negative clean power harness connector.

2. Loosen the battery tray stop bolts and remove the battery tray and battery assembly.

   NOTE: If proper lifting equipment or assistance is not available, individual battery removal should be performed to eliminate possible injury.

3. Remove clean power harness and starter negative and positive battery cables from the battery box. The negative frame ground cable will remain routed through the rear of the battery box (Figure 13).

Figure 13

4. Remove all clipping points currently in place on the negative and positive battery cables from the battery box to the starter.

   NOTE: If unit is equipped with an ammeter sensor on the negative battery cable, clip points may need to be removed to complete the following process and reinstalled at conclusion of repairs.

5. Battery cables will be routed under the coolant pipes. If the cables are currently routed over (1) or between (2) the coolant pipes, pull the cables out, toward the rear of the unit, to allow proper routing per the following instructions (Figure 14).

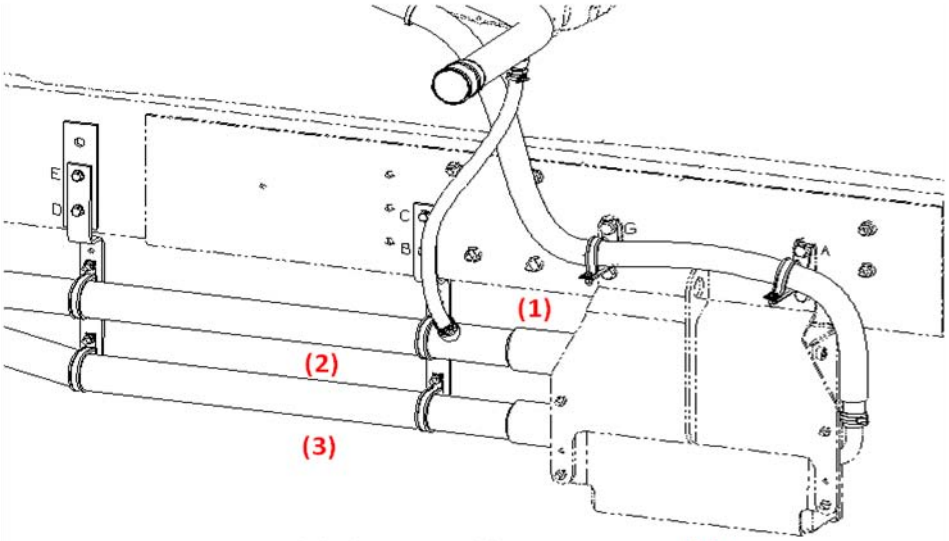

Possible battery cable routing, over **(1)**, between **(2)** or under **(3)** coolant pipes.

Figure 14

6. Remove coolant pipe and hydraulic hose p-clamps from frame mounted bracket rearward of the hydraulic fluid reservoir. Remove bracket from frame rail mounting points. Reinstall replacement bracket (3932762C1) and p-clamps (Figure 15). Install a large dual saddle (3553742C1, hardware 25483R1, 120380 and 25519R1) to the top of the lower bracket. Saddle will be tightened in step 20 (Figure 16).

NOTE: Bracket installation can be performed by placing the bracket lengthwise between the frame and upper coolant pipe then rotate the bracket into final position.

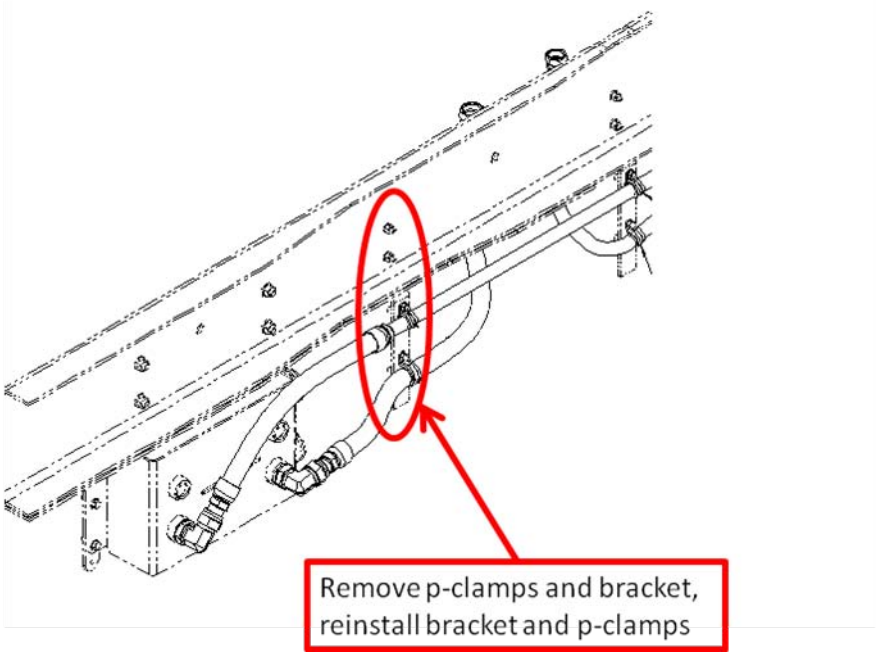

Figure 15

Figure 16

7. Loosely install single saddle (2041341C1, hardware 25483R1, 120380 and 25519R1) on extension clip (2002176C2) and install assembly to side of engine block using M8 bolt (3547776C1) and lock washer (934309R1). Saddle will be tightened in step 20 (Figure 17).

Figure 17

8. Install p-clamp (1677372C1) around lower coolant pipe approximately 8”-10” rearward of the frame mounted bracket replaced in step 6 and loosely install large dual saddle (3553742C1, hardware 25483R1, 120380 and 25519R1). Final location of p-clamp will be determined during final clipping of the battery cables. Saddle will be tightened in step 20 (Figure 18).

Figure 18

9. Remove upper rear hydraulic fluid reservoir mounting bolt (located between coolant pipes) and discard. Loosely install large dual saddle (3553742C1, hardware 25483R1, 120380 and 25519R1) on extension clip (3627806C2, hardware 9413979, 24841R1 and 25709R1) and install assembly. Saddle will be tightened in step 20 (Figure 19).

Figure 19

10. Assemble a single saddle (2041341C1) and large dual saddle (3553742C1, hardware 25483R1, 120380 and 25519R1) to the spring clip (2012155C1) and install assembly on the rear upper slanted edge of the reservoir mounting bracket. Single saddle clamp is to be installed on the top, large dual saddle on the lower side of the spring clip. In the event edge trim was installed on the intended mounting surface, remove edge trim and discard. Tighten saddles in the position as shown in the below figure (Figure 20).

Figure 20

11. Mark and drill two (2) - 3” and two (2) - 5/16” holes in the aft side of the battery box. Holes are to be drilled in the upper rear corner of the aft side of the battery box (Figure 21).

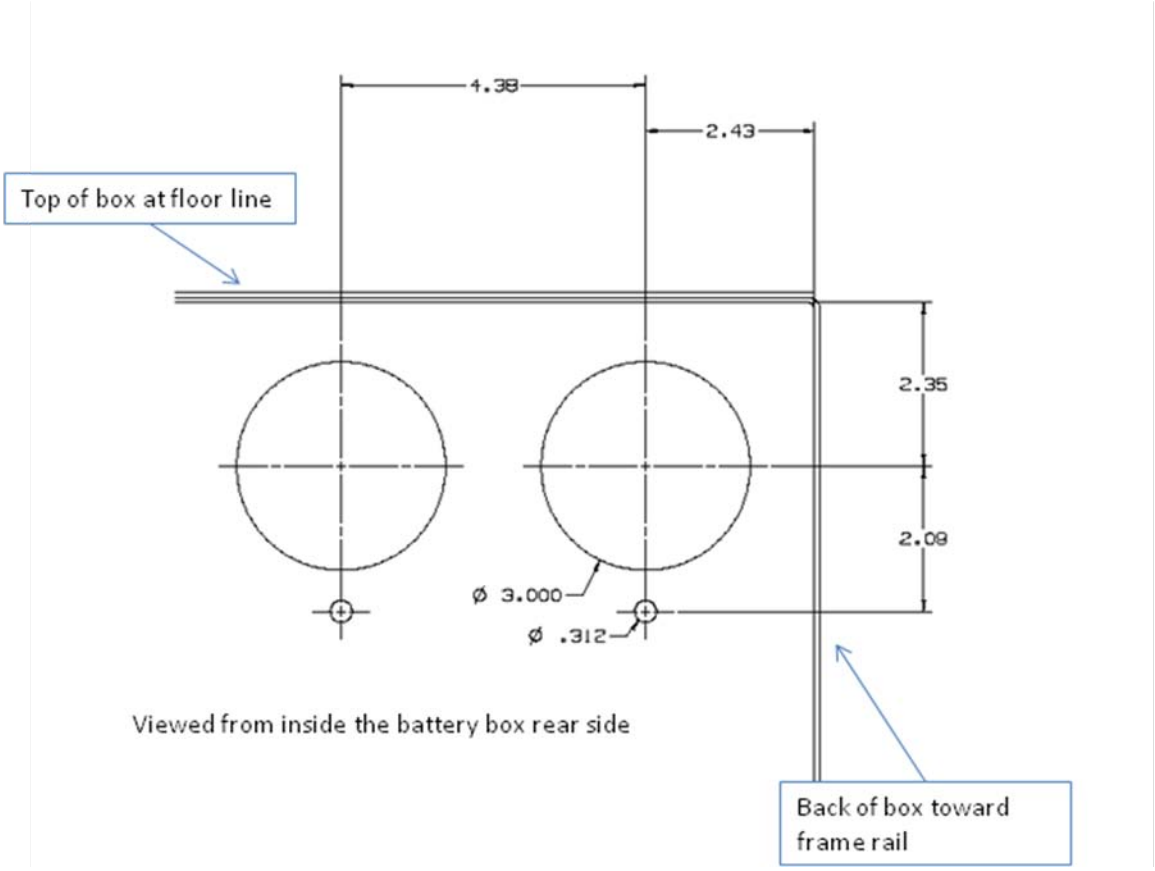

Figure 21

12. Position and install routing grommet and mounting plate (Qty 2 - 2212199C1 and 2212509C1) with self drilling screw (Qty 8 - 456107C1) (Figure 22).

NOTE: Grommets and plates ***MUST*** be installed from the inside of the battery box.

Figure 22

13. Install two (2) saddles (3553742C1, hardware 25483R1, 120380 and 25519R1) on extension clip (454541C1). Install extension clip assembly (hardware 25483R1, 120380 and 25519R1) on the outside of the battery box using the holes drilled below the cable routing points. This step will require assistance from a second technician (Figure 23).

Figure 23

If unit is equipped with the battery box mounted disconnect switch, option code 49BVD, complete the following steps. If unit is not equipped with the disconnect switch, proceed to step 14.

a) Loosely install large saddle (Qty 3 - 3553742C1, hardware 25483R1, 120380 and 25519R1) on extension clip (Qty 3 - 250537C1, hardware 25483R1, 120380 and 25519R1) and install assembly in holes 10a, 10b and 10c. Saddle will be tightened in step 20 (Figure 24).

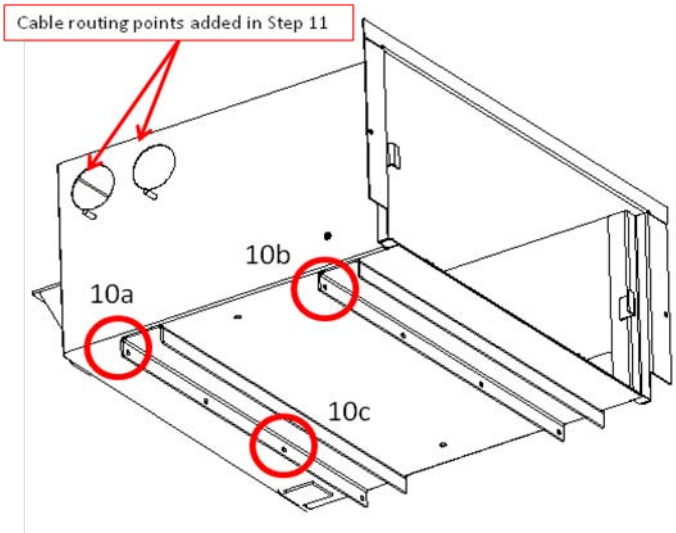

Figure 24

14. Clean battery box area of all shavings and debris.

15. Inspect negative and positive battery cable to determine if any abrasion point caused insulation chafe requiring repair.

a. If no insulation chafe is found proceed to step 16.
b. If insulation chafe is found, use dual wall heat shrink (8900214R91) on the affected cable to repair the chafe. Installation can be completed by removing the protective conduit cover, slide the heat shrink to the affected area and heat as required.
c. If insulation chafe is found resulting in a condition requiring cable replacement (copper damage), open a case file and attach pictures of the affected area for repair instructions.

16. Place positive battery cable and clean power harness into the battery box using the inboard routing point. Place the starter negative battery cable into the battery box using the outboard routing point.

17. Reinstall the battery tray/batteries and secure the tray stop bolts/hold down hardware.

18. Reconnect all battery cable connections and clean power harness connections.

19. With the battery box extended approximately half-way, install tie-straps at all clipping points beginning at the starter. All tie-straps used are ½", part number 3516934C1, unless otherwise stated. During installation of the remaining saddle clamp and tie-straps, ensure the cables are positioned eliminating contact to abrasion points and contact between the negative and positive cable. Prior to final tightening of the tie-straps, ensure battery tray can be extended approximately half way, cables are correctly positioned, and no abrasion points exist. Battery cables should make contact with clip point hardware only.

a. Install a double swivel saddle (3554554C1) between the negative and positive cable near the front of the starter (Figure 25).

Figure 25

b. Install tie-strap to positive cable to the engine block mounted extension clip and saddle (Figure 17).
c. Install tie straps to negative and positive cables to the lower coolant pipe p-clamp. Position p-clamp to allow consistent routing of the battery cables to eliminate any abrasion points prior to final tightening (Figure 18).
d. Install tie-strap to the negative and positive cables to the frame mounted coolant pipe bracket (Figure 15, 16).
e. Install tie-straps to the negative and positive cables to the reservoir mounted extension clip (Figure 19).
f. Install tie-strap to clean power harness to the single saddle mounted on the spring clip (Figure 19).
g. Install tie-straps to the negative and positive cables to the spring clip (Figure 20).
h. Install tie-straps to negative and positive cables and clean power harness to the battery box mounted saddles (Figure 23).

If unit was equipped with disconnect switch, install tie-straps to the negative and positive cables to the additional bottom of battery box saddles (Figure 24).

i. Install tie-strap to clean power harness to positive cable between rear of the battery box and spring clip. Inspect overall battery cable routing and add additional double swivel saddle (3554554C1) to eliminate any potential contact between battery cables (Figure 26).

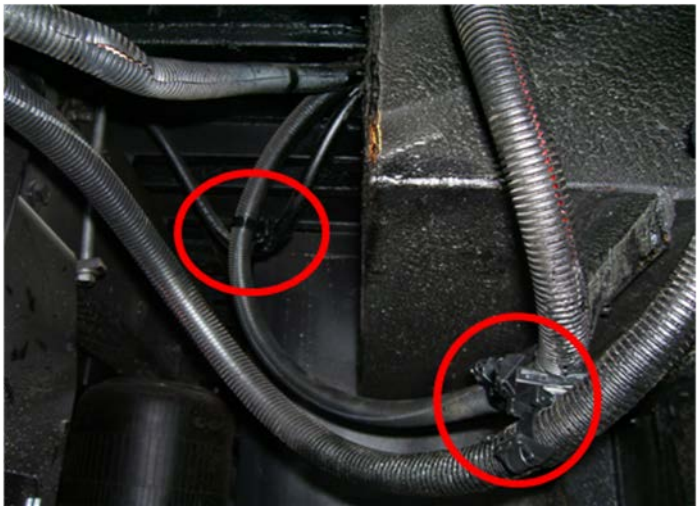

Figure 26

20. Verify all tie-straps and mounting hardware are tight and all tie-straps have been trimmed.

21. Reapply grafo grease to battery connections.

END OF SERVICE PROCEDURE

LABOR INFORMATION

Operation Number	Description	Time
A40-11511-1	Vehicle Equipped with Group 31 Battery	1.4
A40-11511-2	Vehicle Equipped with 8D Battery	1.9
A40-11511-3	Add On: Vehicle Equipped with Battery Box Mounted Disconnect Switch	0.2

CAMPAIGN IDENTIFICATION LABEL

Each vehicle corrected in accordance with this campaign must be marked with a CTS-1075 Campaign Identification Label.

Complete the label and attach on a clean surface next to the vehicle identification number (VIN) plate.

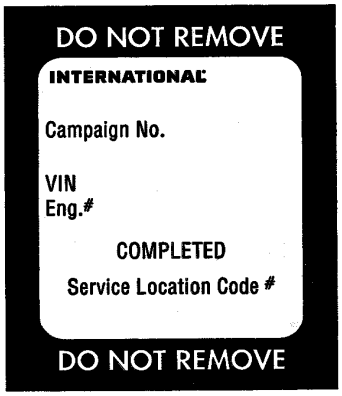

ADMINSTRATIVE/DEALER RESPONSIBILITIES

WARRANTY CLAIMS

Refer to Dealer Warranty Manual for procedures to conduct Recall Campaigns.

It is important that the Recall Coding be completed properly to assist in processing the warranty claim. Complete instructions will be found in the Warranty Manual, Section 7-1. Special attention should be given to Items 39 through 44:

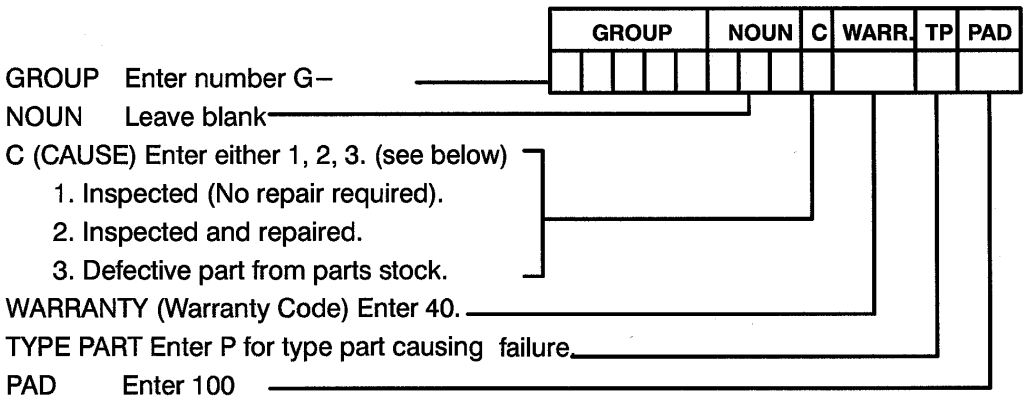

UNITED STATES AND POSSESSIONS

The National Traffic and Motor Vehicle Safety Act, as amended, provides that each vehicle that is subject to a vehicle recall campaign must be adequately repaired within a reasonable time after the owner has tendered it for repair. A failure to adequately repair within 60 days after a tender of a vehicle is prima facie evidence of failure to repair within a reasonable time. If the condition is not adequately repaired within 60 days, the owner may be entitled to replacement with an identical or reasonable equivalent vehicle at no charge, or to a refund of the purchase price less a reasonable allowance for depreciation.

Dealers must correct all vehicles subject to this campaign at no charge to the owner, regardless of mileage, age of vehicle, or ownership, from this time forward.

Dealers should proceed immediately to make necessary correction to units in inventory. All inventory vehicles subject to this recall campaign must be corrected prior to sale, transfer or delivery. If vehicles have been sold or transferred and you are in receipt of Customer Notification Letters and Authorization for Recall Service cards for those vehicles, the transfer location or customer must be notified immediately from your dealer location.

Dealers must make every effort to promptly schedule an appointment with each owner to repair his or her vehicle as soon as possible. However, consistent with the customer notification, dealers are expected to complete the repairs on the mutually agreed upon service date.

Dealers involved in the recall process will be furnished a listing of owner names and addresses to enable them to follow up with owners and have the vehicles corrected. Use of this listing must be limited to this campaign because the list may contain information obtained from state motor vehicle registration records and the use of such motor vehicle registration data for purposes other than this campaign is a violation of law in several states.

CANADA

Dealers must correct all vehicles subject to this campaign at no charge to the owner, regardless of mileage, age of vehicle, or ownership, from this time forward.

Dealers should proceed immediately to make necessary correction to units in inventory. All inventory vehicles subject to this recall campaign must be corrected prior to sale, transfer or delivery. If vehicles have been sold or transferred and you are in receipt of Customer Notification Letters and Authorization for Recall Service cards for those vehicles, the transfer location or customer must be notified immediately from your dealer location.

Dealers must make every effort to promptly schedule an appointment with each owner to repair his or her vehicle as soon as possible. However, consistent with the customer notification, dealers are expected to complete the repairs on the mutually agreed upon service date.

Dealers involved in the recall process will be furnished a listing of owner names and addresses to enable them to follow up with owners and have the vehicles corrected. Use of this listing must be limited to this campaign because the list may contain information obtained from state motor vehicle registration records and the use of such motor vehicle registration data for purposes other than this campaign is a violation of law in several states.

EXPORT

Export Distributors should proceed immediately to make necessary correction to units in inventory. All inventory vehicles subject to this recall campaign must be corrected prior to sale, transfer or delivery. If vehicles have been sold or transferred and you are in receipt of Customer Notification Letters and Authorization for Recall Service cards for those vehicles, the transfer location or customer must be notified immediately from your distributor location.

Export Distributors are to submit warranty claims in the usual manner making reference to this recall number.

Export Distributors are expected to provide full cooperation and follow-up with respect to this important subject matter. If you have any questions or need further assistance, please contact the Regional Service Manager at your regional office.

NAVISTAR, INC

Authorized Field Change

AFC 11916

Date: September, 2011

Subject File: ENGINE

Subject: Turbo Air Inlet Boot Replacement

Model: 1300 FBC
Start Date: 04/12/2011 End Date: 05/26/2011

Model: 4300 4X2
Start Date: 03/18/2011 End Date: 06/21/2011

Model: 4300M 4X2
Start Date: 04/06/2011 End Date: 06/17/2011

Model: 4300M 4X4
Start Date: 04/07/2011 End Date: 05/31/2011

Model: 4400 4X2
Start Date: 03/21/2011 End Date: 06/20/2011

Model: 4400 6X4
Start Date: 03/18/2011 End Date: 06/22/2011

Model: 7300 4X2
Start Date: 03/23/2011 End Date: 06/15/2011

Model: 7300 4X4
Start Date: 03/31/2011 End Date: 06/14/2011

Model: 7400 4X2
Start Date: 03/22/2011 End Date: 06/21/2011

Model: 7400 4X4
Start Date: 03/30/2011 End Date: 06/21/2011

Model: 7400 6X4
Start Date: 03/17/2011 End Date: 06/22/2011

Model: 7400 6X6
Start Date: 04/01/2011 End Date: 06/20/2011

Model: 7500 4X2
Start Date: 03/28/2011 End Date: 06/21/2011

Model: 7500 4X4
Start Date: 03/24/2011 End Date: 05/31/2011

Model: 7500 6X4
Start Date: 03/24/2011 End Date: 06/21/2011

Model: 7500 6X6
Start Date: 03/31/2011 End Date: 06/20/2011

Model: BE S Bus
Start Date: 04/18/2011 End Date: 06/14/2011

Copyright© 2011 Navistar, Inc. All rights reserved. All marks are trademarks of their respective owners.

Model: CE C Bus
Start Date: 04/12/2011 End Date: 05/23/2011

Model: CE S Bus
Start Date: 03/29/2011 End Date: 06/20/2011

Model: HC C Bus
Start Date: 03/29/2011 End Date: 05/26/2011

Model: RE C Bus
Start Date: 05/18/2011 End Date: 06/08/2011

Model: RE S Bus
Start Date: 04/05/2011 End Date: 06/23/2011

Model: TerraStar® 4X2
Start Date: 03/28/2011 End Date: 06/29/2011

Engine Family: EPA 2010 MaxxForce® 7

Engine Family: EPA 2010 MaxxForce®DT / 9 / 10

DESCRIPTION

The turbo air inlet boot may fail at the turbo compressor connection on certain MaxxForce 7 (V8) and MaxxForce DT, 9, and 10 (I6) engines. This AFC instructs the user to replace the turbo inlet boot for all affected engines in field.

NOTE – To properly perform this repair, dealers are encouraged to purchase crimping pliers - Lisle Tool #30800. This tool is available through Service Parts under: ILIS30800 (ISN Tool Program).

PARTS INFORMATION

Table 1 Parts Information

Part Number	Description	Quantity
1889150C91	Air inlet duct (I6)	1
1889602C91	Air inlet duct (V8)	1
1840728C1	Clamp, hose (I6 / V8)	1

PROCEDURE

WARNING – To prevent vehicle damage, personal injury or death, park the vehicle on a flat, level surface. Make sure the engine ignition is in the off position, and the transmission is in the neutral or park position, if the vehicle is equipped with an automatic transmission. Set the parking brake, block the wheels to prevent the vehicle from moving in both directions, and disconnect the batteries at the negative terminal before doing any service procedures on the vehicle.

WARNING – To prevent personal injury or death, remove ground cable from negative terminal of main battery before disconnecting electrical components. Always connect ground cable last.

WARNING – To prevent personal injury or death, make sure that the engine has cooled before removing components.

WARNING – To prevent personal injury or death, always wear safe eye protection when performing vehicle maintenance.

WARNING – To prevent personal injury or death, do not let engine fluids stay on your skin. Clean skin and nails using hand cleaner and wash with soap and water. Wash or discard clothing and rags contaminated with engine fluids.

PROCEDURE (CONT.)

MAXXFORCE® DT, 9, AND 10 ENGINE TURBOCHARGER INLET BOOT REPLACEMENT INSTRUCTIONS

1. Remove inner fender.

2. Remove air compressor air supply hose (If applicable) (See Figure 1, page 4).

Figure 1 Air compressor air supply hose

3. Remove air filter restriction tube (If applicable) (See Figure 2, page 4).

Figure 2 Air filter restriction tube

MAXXFORCE® DT, 9, AND 10 ENGINE TURBOCHARGER INLET BOOT REPLACEMENT INSTRUCTIONS (CONT.)

4. Disconnect the MAF sensor connector.

5. Loosen clamp at the air duct to the air filter housing (See Figure 3, page 5).

Figure 3 Clamp on air duct

6. Remove the air filter housing retaining nut (See Figure 4, page 5).

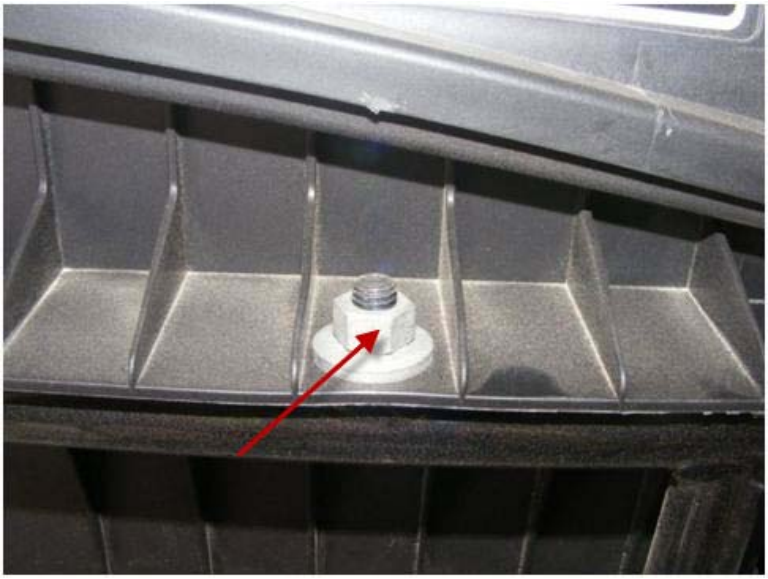

Figure 4 Air filter housing retaining nut

7. Remove air filter housing.

MAXXFORCE® DT, 9, AND 10 ENGINE TURBOCHARGER INLET BOOT REPLACEMENT INSTRUCTIONS (CONT.)

8. Loosen the clamp at the air duct to the turbocharger inlet boot (See Figure 5, page 6).

Figure 5 Air duct clamp

9. Remove the air duct.

10. Disconnect the Wastegate vent tube (See Figure 6, page 6).

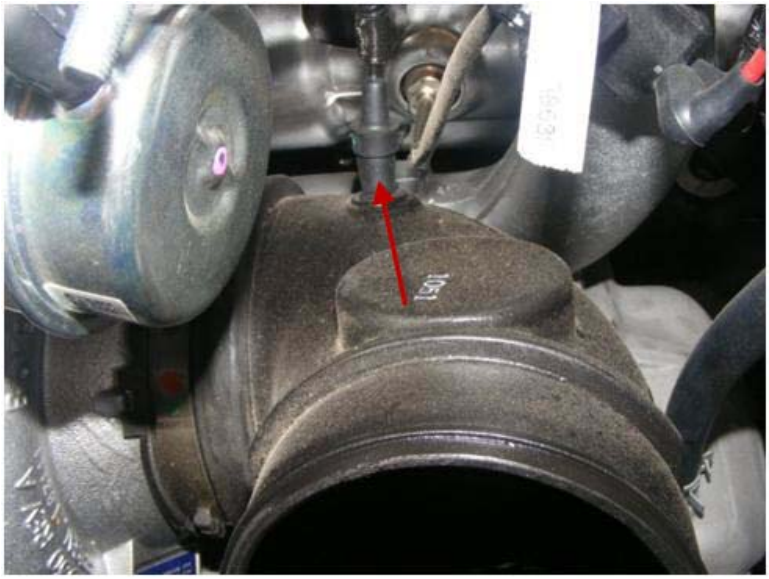

Figure 6 Wastegate vent tube

11. Loosen clamp at turbocharger inlet (See Figure 7, page 7).

MAXXFORCE® DT, 9, AND 10 ENGINE TURBOCHARGER INLET BOOT REPLACEMENT INSTRUCTIONS (CONT.)

Figure 7 Clamp on turbocharger inlet

12. Cut breather tube clamp and disconnect hose (See Figure 8, page 7).

Figure 8 Breather tube clamp

13. Remove turbocharger inlet boot.

14. Do a visual inspection of the turbocharger compressor wheel for damage.

    - If compressor wheel is not damaged, proceed to step 15.

MAXXFORCE® DT, 9, AND 10 ENGINE TURBOCHARGER INLET BOOT REPLACEMENT INSTRUCTIONS (CONT.)

- If compressor wheel is damaged, a Managed Repair case file must be submitted to Technical Service along with photos of the damaged compressor wheel.

    A. Start the Managed Repair case file by navigating to the Managed Repairs tab in ISIS for the VIN being inspected and click on the Launch Process button for AFC 11916 Supplement Turbo Compressor Wheel Damage Managed Repair (See Figure 9, page 8).

    B. Complete the Managed Repair form and attach 2 – 3 Digital Photos of the damaged wheel.

    C. After submitting the Managed Repair form, Technical Service will provide further inspection or repair instructions.

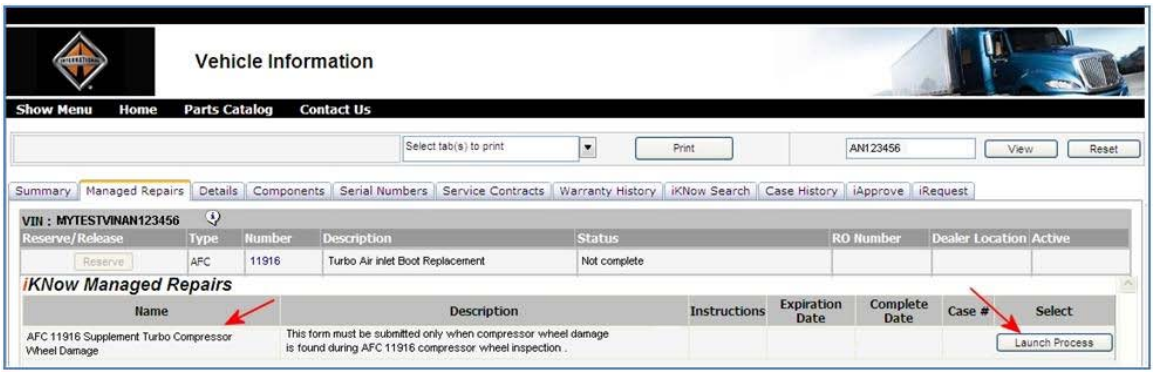

Figure 9 ISIS Managed repairs tab

15. Install the new turbocharger inlet boot; align the turbocharger notch in the center of the two air inlet duct alignment tabs (See Figure 10, page 8).

Figure 10 Turbocharger alignment notch

16. Torque clamp to 5 Nm / 48 lb-in.

MAXXFORCE® DT, 9, AND 10 ENGINE TURBOCHARGER INLET BOOT REPLACEMENT INSTRUCTIONS (CONT.)

17. Reconnect the Wastegate vent tube to the turbocharger inlet boot.

18. Connect breather tube and install a new pinch clamp.

19. Install air duct and air filter assembly: make sure the tab on the air filter housing aligns between the two tabs on the air duct (See Figure 11, page 9).

Figure 11 Air filter housing

20. Torque clamps to 5 Nm / 48 lb-in.

21. Install air filter retaining nut.

22. Reconnect MAF sensor.

23. Reconnect the air compressor air supply hose and the air filter minder tube.

24. Install inner fender.

25. Perform the MAF recalibration procedure with ServiceMaxx™. See the iKnow *2010 MAXXFORCE 7, DT, 9 and 10 MAF SENSOR CALIBRATION* (IK1200526) document at https://evalue.internationaldelivers.com/service_kb/iknow/iKNowDocTool/ArticleViewer.aspx?ControlID=4050.

MAXXFORCE™ 7 TURBOCHARGER INLET BOOT REPLACEMENT INSTRUCTIONS

1. Remove the inner fender splash shield.

2. Carefully disconnect the Wastegate vent tube from the turbocharger inlet boot.

3. Loosen the two clamps; remove the tube from the inlet boot and pull out of the way (See Figure 12, page 10).

Figure 12 Removing tube from inlet boot

4. Twist boot back to remove (See Figure 13, page 10).

Figure 13 Removing inlet boot

MAXXFORCE™ 7 TURBOCHARGER INLET BOOT REPLACEMENT INSTRUCTIONS (CONT.)

5. Do a visual inspection of the turbocharger compressor wheel for damage.

   - If compressor wheel is not damaged, proceed to step 6.
   - If compressor wheel is damaged, a Managed Repair case file must be submitted to Technical Service along with photos of the damaged compressor wheel.

     A. Start the Managed Repair case file by navigating to the Managed Repairs tab in ISIS for the VIN being inspected and click on the Launch Process button for AFC 11916 Supplement Turbo Compressor Wheel Damage Managed Repair (See Figure 9, page 8).

     B. Complete the Managed Repair form and attach 2 – 3 Digital Photos of the damaged wheel.

     C. After submitting the Managed Repair form, Technical Service will provide further inspection or repair instructions.

6. Install new boot; align the turbocharger notch in the center of the two air inlet duct alignment tabs (See Figure 14, page 11).

Figure 14 Turbocharger alignment notch

7. Torque clamps to 5 Nm / 48 lb-in.

8. Reconnect the Wastegate vent tube to the turbocharger inlet boot.

9. Perform the MAF recalibration procedure with ServiceMaxx™. See the iKnow *2010 MAXXFORCE 7, DT, 9 and 10 MAF SENSOR CALIBRATION* (IK1200526) document at https://evalue.internationaldelivers.com/service_kb/iknow/iKNowDocTool/ArticleViewer.aspx?ControlID=4050.

Operation number must appear on all claims.

Table 2 Labor Information

Operation No.	Description	Time
A40–11916-1	I–6 engine (MFDT / 9 / 10) turbo inlet boot replacement	0.7 hour
A40–11916-2	V-8 engine (MF7) turbo inlet boot replacement	0.6 hour
A40– 11916-3	Turbocharger inspection	0.1 hour

ADMINISTRATIVE PROCEDURE

Expense is to be charged to Warranty. Claims are to be submitted in the normal manner, making reference to Authorized Field Change Number G-11916.

It is important that the coding be completed properly to assist in processing the warranty claim. Complete instructions will be found in the Warranty Manual, Section 7–1. Special attention should be given to Items 39 through 44.

To assure this important improvement is made in a timely manner, all claims for G-11916 activity must be submitted by September 31, 2012 or within the normal warranty period for the vehicle, if after September 31, 2012.

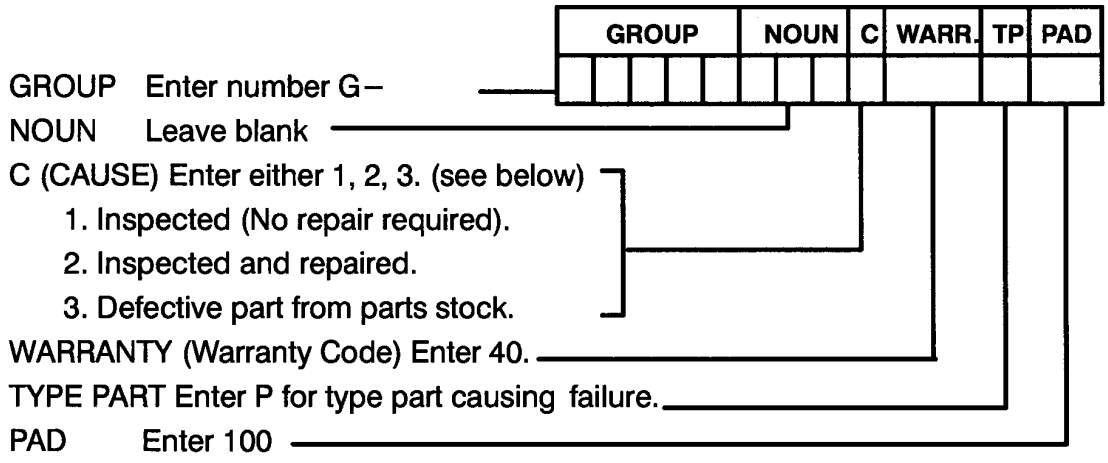

Distribution: All except J–81
Reproduction: Not required.

All marks are trademarks of their respective holders.

Authorized Field Change

NAVISTAR®

AFC 11926

Date: January, 2012

Subject File: ENGINE

Subject: CE Bus Intake Pipe Replacement

Model: CE C Bus
Start Date: 01/01/2010 End Date: 11/07/2011

Engine Family: MaxxForce® 7 (2010 Emissions)

DESCRIPTION

The fresh air intake pipe may contact the hood under certain conditions. If this condition is present, it can cause wear on the pipe which may result in a small hole being worn into the pipe. A hole in the pipe can result in dirt ingestion and premature engine wear. The repair will involve the installation of a new fresh air intake pipe.

PARTS INFORMATION

Table 1 Parts Information

Part Number	Description	Quantity
3941280C91	Air Intake Pipe Assembly	1

© 2012 Navistar, Inc. All rights reserved. All marks are trademarks of their respective owners.

PROCEDURE

WARNING – To prevent vehicle damage, personal injury or death, park the vehicle on a flat, level surface. Make sure the engine ignition is in the off position, and the transmission is in neutral or in the park position, if the vehicle is equipped with an automatic transmission. Set the parking brake, block the wheels to prevent the vehicle from moving in both directions, and disconnect the batteries at the negative terminal before doing any service procedures on the vehicle.

WARNING – To prevent personal injury or death, always wear safe eye protection when performing vehicle maintenance.

WARNING – To prevent personal injury or death, make sure that the engine has cooled before removing components.

WARNING – To prevent personal injury or death, do not let engine fluids stay on your skin. Clean skin and nails using hand cleaner and wash with soap and water. Wash or discard clothing and rags contaminated with engine fluids.

INTAKE PIPE REPLACEMENT PROCEDURE

1. Loosen the two clamps; remove the air intake tube from the inlet boot and pull out of the way (See Figure 1, page 3) and (See Figure 2, page 3).

INTAKE PIPE REPLACEMENT PROCEDURE (CONT.)

Figure 1 Removing tube from inlet boot

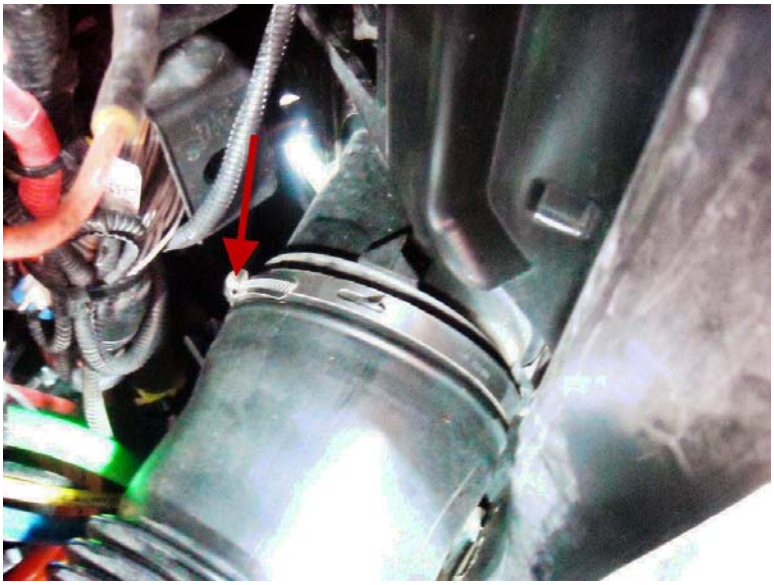

Figure 2 Air intake pipe clamp location

2. Remove the air intake pipe assembly.

3. Install the new air intake pipe assembly.

4. Align the turbocharger notch in the center of the two air inlet duct alignment tabs (See Figure 3, page 4).

INTAKE PIPE REPLACEMENT PROCEDURE (CONT.)

Figure 3 Turbocharger alignment notch

5. Torque the two clamps to 5 N•m (48 lb-in).

6. Perform the MAF recalibration procedure with ServiceMaxx™. See the following iKnow article 2010 MaxxForce® 7, DT, 9 and 10 MAF Sensor Calibration IK1200526.

Operation number must appear on all claims.

Table 2 Labor Information

Operation No.	Description	Time
A40-11926-2	Replace Air Intake Pipe Assembly	0.5 hours

ADMINISTRATIVE PROCEDURE

Expense is to be charged to Warranty. Claims are to be submitted in the normal manner, making reference to Authorized Field Change Number G-11926.

It is important that the coding be completed properly to assist in processing the warranty claim. Complete instructions will be found in the Warranty Manual, Section 7–1. Special attention should be given to Items 39 through 44.

To assure this important improvement is made in a timely manner, all claims for G-11926 activity must be submitted by January 31, 2013 or within the normal warranty period for the vehicle, if after January 31, 2013.

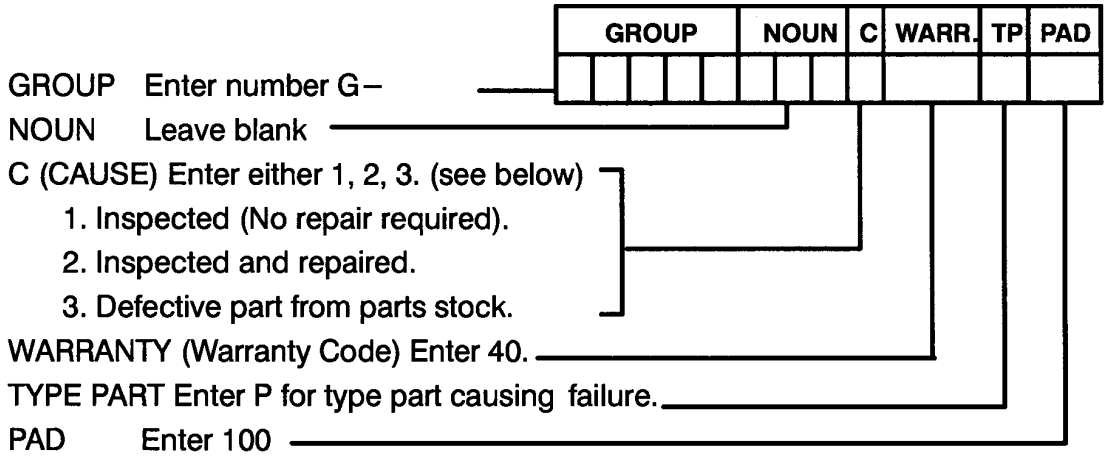

Distribution: All except J–81
Reproduction: Not required.

All marks are trademarks of their respective holders.