Agenda

2015 Four Hour Update

1. Administrative

2. Fleet condition.

3. Propane powered buses update.

4. Changes to Kentucky Minimum Specifications.

5. Emissions update.

6. Service Writing

7. Repeats

    a. Carpenter buses.

    b. TES 295 fluid.

    c. Hand rail testing

8. Parts procurement

9. New seat availability for Thomas Built buses.

10. Horton Fans

11. Tires. Pressure recorded.

12. Warranty

13. DPF leaks and clogging

14. Haldex Slacks.

15. Checking Adjustment on ASA-5

16-18. Recalls, AFC, Service bulletins.

AGENDA

INSPECTOR-INSTRUCTOR

TRAINING PROGRAM

REIMBURSEMENT FORM

SCHOOL DISTRICT: _____

NAME: _____

TRAINING DATES: _____

DAILY WAGES: _____ X _____ = $ _____
No. of Days

MOTEL EXPENSE: _____

MEALS: (BR $7; LU $8; DI $15) or receipt amount whichever is lower: _____

TRAVEL: No. of Miles _____ X $.41 per mile = _____

OTHER PRE-APPROVED EXPENSES: _____

_____

_____

_____

$ _____

TOTAL EXPENSES $ _____

OFFICIAL RECEIPTS MUST BE ATTACHED FOR ALL EXPENDITURES

SIGNATURES

_____
INSPECTOR-INSTRUCTOR

_____
SUPERINTENDENT OR
TRANSPORTATION DIRECTOR

AGENDA

PUPIL TRANSPORTATION BRANCH
ANNUAL FOUR-HOUR UPDATE
2014

INSTRUCTOR NAME _____ DATE _____

LOCATION _____

NAME	TITLE	SCHOOL DISTRICT

AGENDA

Fleet Condition Notes 2015

1. Fleet information:

a. There are 9,925 buses on inventory, 123 less than last year.

b. There are 2,042 Type D buses (20% of the fleet) down 52 from last year.

c. There are 454 Type A buses (5% of the fleet) down 78 from last year.

d. There are 7429 Type C buses (75% of the fleet).

e. There are 115 manuals left *and 2* gasoline engines.

f. There are 157 Hybrid, diesel/electric buses and 12 propane powered buses.

G. The fleet has 9,911 diesels (including hybrids).

2. This year's purchases:

a. There were 379 buses on order as of 3/24/15. 165 Thomas Built (43%), 112 IC (30%), 102 Bluebird (27%)

b. Historically 14'353, '13, 346; '12, 466; '11, 563; '10, 631; '09,483; 08,437; '07, 815; '06, 565, 05,820.

c. Current depreciation: $47,512,631.00

d. 2,198 (22%) are out of depreciation.

AGENDA

Propane Powered Bus Pilot Project Summary

The original pilot bus was delivered to Crittenden County Garage August 2013.

After Initial inspection it was placed on route and has performed as expected since

Fuel economy has increased with break in as expected and is currently 4.7 compared with 6.7 mpg for a comparable diesel on a similar route.

The cost per gallon for propane is significantly lower so it is useful to express fuel economy in cents per mile.

For the first 7500 miles the propane cost was 24 cents per mile

For a similar diesel the cost was 55 cents per mile.

An average route bus is expected to operate 12,000 miles per year and use 1800 gallons of diesel @3.90 per gallon. The fuel cost for this average bus would be $7020.00

The propane bus running a similar route would be expected to on 44% of that amount or $3089.00 for a savings of $3931.00.

The current contract price to upgrade a standard bus to propane is $8960.00. This cost would be recovered in 2.27 years.

Additionally basic maintenance costs would be similar with the exception of oil changes.

Oil change for a diesel bus $136.00 (27 quart system, larger filter)

Oil change for propane bus $31.00 (7 quart system, small filter)

Crittenden County ordered two more propane buses, delivered April 2014. These buses were monitored for both fuel economy and maintenance performance with similar results.

Crittenden now has seven propane buses in use and one on order.

AGENDA

Proposed Changes to
Kentucky Minimum Specifications for School Buses
2016 Edition

Page 14

~~HYDRAULIC BRAKING SYSTEM~~

~~All hydraulic brake systems shall utilize the power steering pump as the primary power source, with an electrical driven power source operating as a secondary system in case of failure of the primary power source. The hydraulic power brake system shall be Delco Moraine Hy Power or prior approved equal. The brake system shall utilize a power steering pump, or totally separate mounted pump, as the primary power source.~~

~~An electric driven source to safeguard primary pump failures and electrical protection for the electrical driven power source shall be sized to eliminate the interruption of the circuit breaker during service or continual use.~~

~~The failure warning system shall be both visual and audible. The light is to be mounted on the dash. The audible signal shall be a buzzer type located in the dash area and shall be loud enough to be easily heard by the driver. A check of the warning system shall be activated for a system check each time the engine is turned on.~~

~~PARKING BRAKE~~

~~The parking brake shall be either the Orscheln lever type located readily accessible to the driver or the de-energized spring brake type located on the rear axle, rear axle driveline or transmission.~~

~~Orscheln lever type parking brakes shall meet the holding requirements as outlined by FMVSS 105, with no more than seventy (70) pounds applied to the lever arm for engagement or disengagement. Any Orscheln lever applied driveline brake shall be of the drum and internal expanding shoe type. A ratchet type, foot operated parking brake shall be acceptable provided it meets the holding requirements of FMVSS 105 and is approved by the Pupil Transportation Branch at the pilot inspection.~~

~~NOTE: ANY CHASSIS MANUFACTURER USING THE ORSCHELN LEVER TYPE PARKING BRAKE SHALL EQUIP THE ORSCHELN LEVER SO THAT IT WILL REMAIN AT A FULL REST POSITION, ABSENCE OF SLACK TRAVEL, IN A MANNER THAT WOULD NOT CAUSE MORE THAN SEVENTY (70) POUNDS OF LOAD NEEDED FOR ENGAGEMENT. THE PARKING BRAKE FRICTION MATERIAL SHALL BE ASBESTOS FREE.~~

GENERAL REQUIREMENTS

All brake lining shall be of asbestos-free material. ~~All hydraulic brake systems 16-22 passenger shall be equipped with an antilock brake system.~~

Reason for change: All type C and D buses are equipped with air brakes. This section is no longer needed.

Page 17.

AIR COMPRESSOR

The air compressor shall be a minimum 13.2 cubic foot capacity. The air compressor shall be Bendix Corporation Tu-Flo 550, Wabco NW-250 15.2 cubic foot capacity or prior approved equal.

NOTE: AIR INTAKE SHALL BE FILTERED THROUGH THE ENGINE AIR FILTER on all diesel powered chassis.

Reason for change: Propane powered buses have a separate compressor filter to maintain air flow readings for engine operation.

Page 18.

SLACK ADJUSTERS (AUTOMATIC)

Automatic slack adjusters shall be installed as original equipment on all air brake systems and have worm adjustment screws for continuous adjustment with external grease fittings. Automatic slack adjusters shall be Haldex 400-10-001, Meritor A32-3276-H-1152, A15-3275-J-1154 or prior approved equal. Grease fitting shall be indexed for serviceability.

Reason for change: Vendor requested change. Allows more competition

COOLING SYSTEM

A coolant recovery system shall be provided. All coolant overflows, if applicable, shall be run outside of the engine compartment and extend below the frame rail. The coolant system shall be monitored by an audible and visual signal for over-temperature conditions and shall be located in the driver compartment (refer to "Engine" section). Coolant shall be fully formulated, ethylene glycol, non-OAT ~~long life~~ diesel coolant ASTM D-6210-08.

Reason for change: Clarifies type of coolant to be used.

Page 21

ENGINE

The chassis shall be equipped with one of the following diesel engines:

Engine	Minimum Horsepower	Chassis
~~INTERNATIONAL MAXFORCE DT466~~	~~190~~	~~34-52 PASSENGER TYPE "C"~~
~~INTERNATIONAL MAXFORCE DT466~~	~~215~~	~~66-72 PASSENGER TYPE "C"~~
~~INTERNATIONAL MAXFORCE DT466~~	~~215~~	~~66-78 PASSENGER "FC"~~
INTERNATIONAL MAXFORCE DT466	230	78-84 PASSENGER "RE"
INTERNATIONAL MAXFORCE DT466	250	78-84 PASSENGER "RE"
Cummins ISB	190	34-52 PASSENGER TYPE "C"
Cummins ISB	210	66-72 PASSENGER TYPE "C"
Cummins ISB	210	66-78 PASSENGER "FE"
Cummins ISB	230	78-84 PASSENGER "RE"
Cummins ISB	250	78-84 PASSENGER “RE”

Reason for change: The International DT 466 is no longer being offered in type C buses.

Page 25

GROSS VEHICLE WEIGHT RATING

The chassis shall have a GROSS VEHICLE WEIGHT RATING of the following minimums:

Type	Chassis (Passenger Capacity)	Gross Axle Weight (Pounds)
"C"	34	21,000
"C"	52	25,500
"C"	66-72	~~29,000~~ 27,000
"D" FC	70-78	30,000
"D" RE	78-84	35,000

Reason for change: Allows the use of lighter front springs resulting in a softer ride.

Page 26

SPRINGS (FRONT-REAR)

Each front and rear spring shall have a capacity, at the ground, of the minimums/maximums shown below:

Type	Chassis (Passenger Capacity)	Front Minimum (Pounds)	Rear Minimum (Pounds)	Rear Maximum (Pounds)
"C"	34	4,000	6,500	6,500
"C"	52	4,000	8,750	
"C"	66-72	~~5,000~~ 4200	9,250	
"D" FC	70-78	7,000	9,250	
"D" RE	78-84	6,500	11,500	

Reason for change: Allows the use of lighter front springs resulting in a softer ride.

Page 27

TIRES AND RIMS

Tires supplied on all Kentucky school bus chassis shall be first-line, steel belted, low profile and tubeless with highway-type tread. They shall be supplied by one of the major tire manufacturers under its own brand name and furnished as original equipment as shown in the chassis supplier's most recent data book and specifications literature on file with the Pupil Transportation Branch. The tires shall be of the same manufacture and tread design. The tires shall be Goodyear 295/75R22.5 G661 LR G, 295/75R22.5 G39~~5~~9A LR H, Continental/General 295/75R22.5, Michelin 275/80R22.5 XZE, Bridgestone/Firestone 295/75R22.5 or prior approved equal.

Reason for change: The G395 tire is no longer and has been superseded by the G399A

Page 29

The following engines shall be equipped with the following automatic transmissions:

Engine	Horsepower	Capacity	Transmission	Standard/Option
~~INTERNATIONAL DT466E~~	~~190~~	~~34-52~~	~~PTS2500~~	~~STANDARD~~
~~INTERNATIONAL DT466E~~	~~215~~	~~66~~	~~PTS2500~~	~~STANDARD~~
~~INTERNATIONAL DT466E~~	~~215~~	~~66~~	~~PTS3000~~	~~OPTION~~
~~INTERNATIONAL DT466E~~	~~215~~	~~72-C~~	~~PTS3000~~	~~STANDARD~~
~~INTERNATIONAL DT466E~~	~~215~~	~~72-C~~	~~PTS2500~~	~~OPTION~~
~~INTERNATIONAL DT466E~~	~~215~~	~~70-78 FC~~	~~PTS3000~~	~~STANDARD~~
INTERNATIONAL DT466E	230-250	78-84 RE	PTS3000	STANDARD
CUMMINS ISB	190	34-52	PTS2500	STANDARD
CUMMINS ISB	210	66	PTS2500	STANDARD
CUMMINS ISB	210	66	PTS3000	OPTION
CUMMINS ISB	210	72-C	PTS3000	STANDARD
CUMMINS ISB	210	72-C	PTS2500	OPTION
CUMMINS ISB	210	70-78 FC	PTS3000	STANDARD
CUMMINS ISB	230-250	78-84 RE	PTS3000	STANDARD
FORD 6.8L V-10 Propane	330	66-72 C	Ford 6R140	STANDARD
FORD 6.8L V-10 Propane	330	70-78 FC	Ford 6R140	STANDARD
GM 8.0L V-8 Propane	339	66-72 C	PTS2500	STANDARD
GM 8.0L V-8 Propane	339	70-78 FC	PTS2500	STANDARD
PSI 8.8L NA V-8 Propane	270	66-72 C	PTS2500	STANDARD
PSI 8.8L NA V-8 Propane	270	70-78 FC	PTS2500	STANDARD

Reason for change: The International DT 466 is no longer being offered in type C buses.

Page 29

WARRANTY

Chassis warranties shall be~~ the manufacturer's standard, twelve thousand (12,000) miles or twelve (12) months. Any chassis or chassis component warranty extension greater than standard warranty coverage shall be made available to purchasers.~~ For five years, one-hundred thousand miles, bumper to bumper excluding fair wear and tear items. Repairs under $500 parts and labor may be repaired at the district's maintenance facility with the dealer supplying the parts and the district supplying the labor at the districts discretion. THE IN-SERVICE DATE OF THE CHASSIS WARRANTY SHALL BE STATED AS PART OF THE INVITATION TO BID ON KENTUCKY SCHOOL BUSES. (Normally August 15) One copy of the chassis/body manufacturer's bus warranty and service handbook shall be shipped to each purchasing school district. Pass through warranty shall be handled by the selling dealer without additional charges to the local district. ~~All wiring and electronic modules shall be warranted for five years.~~

~~All drive train (Engine, Transmission, Differential and Drivelines) warranties shall be a minimum five-year unlimited miles with one hundred (100) percent parts and labor.~~

Reason for change: Clarifies various sub-component warranties.

Page 30

WHEEL ALIGNMENT

All steering axles shall have a toe-in set to provide for maneuverability and longevity under a normally loaded school bus axle in a normal driving mode.

~~Unladed axles shall have toe-in preset to one thirty-second (1/32) inches +/- one thirty-second (1/32") inch.~~

~~NOTE: SHOULD THE TIRE (GOODYEAR, CONTINENTAL/GENERAL, MICHELIN AND/OR BRIDGESTONE/FIRESTONE) AND CHASSIS MANUFACTURERS JOINTLY DETERMINE AND CERTIFY A TOE-IN REQUIREMENT OTHER THAN THE REQUIREMENT REFERENCED BY THE ABOVE MENTIONED STANDARD AS THE OPTIMUM SETTING FOR DRIVABILITY, MANEUVERABILITY AND LONGETIVITY, THE ABOVE MENTIONED STANDARD WILL ADJUST ACCORDINGLY.~~

Reason for change: Buses are purchased as complete units so there is no longer a need to set wheel alignment responsibility on subcontractors. The bus manufacturer is solely responsible.

Page 31

ANTIFREEZE

The bus body company shall replenish the cooling system and fill the body heater system with formulated, ethylene glycol, ~~long-life,~~ heavy duty diesel coolant ASTM–D-6210. Antifreeze type and additives shall meet the requirements of the respective engine manufacturers and radiator suppliers. ~~The additive levels, when required, shall be recorded by the company performing the pre-delivery service. Prior evidence that antifreeze meets the respective manufacturer's recommendation must be furnished.~~

NOTE: AN ~~EXTENDED LIFE~~ ANTIFREEZE DECAL SHALL BE APPLIED IN THE VICINITY OF THE RADIATOR FILL NECK AND OVERFLOW BOTTLE FILL AND SHALL STATE THE TYPE OF ANTIFREEZE TO BE UTILIZED.

Reason for change: Clarifies type of coolant to be used.

Page 41

HEAD BUMPER PAD (ENTRANCE DOOR, EMERGENCY DOOR SIDE AND REAR)

There shall be a head bumper pad installed on the inside door header. This bumper pad shall be approximately three (3) inches in width and shall extend across the entire width of the entrance door opening. The head bumper shall be padded a minimum of one-half (1/2) inch foam, covered with the same upholstery material as covering the seats. The upholstery shall enclose all sides and ends. Exposed screws shall be installed with counter sunk finish washers or other means to protect the riders from impacts. When the head bumper pad mount is used to enclose door

retention hardware the cover over the hardware shall be capable of supporting a 120 lb weight when dropped from a height of four (4) feet. The weight shall be attached to the cover at a single point.

NOTE: SELF-SKINNING FOAM HEADER PADS MEETING ALL OTHER REQUIREMENTS ARE PERMITTED.

EMERGENCY DOOR (REAR)

The upper portion of the emergency door shall be equipped with approved safety glass. The exposed area shall not be less than four hundred (400) square inches. The lower portion of the emergency door shall be equipped with approved ASA laminated glass. The exposed area shall be approximately three hundred and fifty (350) square inches.

Reason for change: Allows the use of self-skinning foam for header pads.

Page 48

FANS (AUXILIARY)

A body header mounted squirrel cage type fan, or approved equal, shall be installed on thirty-four (34) through eighty-four (84) passenger buses. This system shall be equipped with automotive type louvers that can be directed toward the driver. A single auxiliary fan shall be added ~~to the left of the driver~~ to the left side of the windshield located to provide maximum windshield coverage. This Auxiliary fan shall be a heavy duty type, six inch (6”) blades and caged with a small mesh corrosion-resistant metal guard.

NOTE: If the bus is equipped with bulkhead air conditioning, the header mount squirrel cage fan shall be deleted and the air conditioner shall have a portion of its output directed toward the windshield.

Reason for change: Clarifies the location and the requirement for auxiliary fans.

Page 50

FLOOR

The floor and floor covering material shall have an opening cut over the fuel tank, in the area of the fuel-sending unit, to allow the removal of the fuel-sending unit (Diesel buses only). This opening shall be sealed and covered by a metal plate that is attached to the flooring with metal screws.

Propane powered buses do not require a fuel sending unit of this type and no access opening is required.

Page 51

STEP COVERING

Steps shall be covered with first quality, specially processed step covering material. Koroseal pebble top, Blue #71; RCA Rubber, Apex, Color #702; SMI Studded Step flooring, Color #702 or approved equal shall be used. Step covering material shall have non-skid characteristics. The step covering shall have a contrasting white, turndown nosing. The lip of the turndown shall be molded in an approximate 90º shape and shall be an integral part of the tread. Pebble pattern shall extend to the leading edge of the nosing on all but the top step and shall have corrosion and impact resistant polymeric or galvanized metal backing.

The step covering shall be securely fastened to the steps in a manner that will minimize tripping. This requires that the heads of mounting screws or bolts be below the top surface of the step tread. All floor covering seams, joints and termination edges shall be sealed.

~~NOTE: ALL FLOOR COVERING SEAMS, JOINTS AND TERMINATION EDGES SHALL BE SEALED.~~
NOTE: Body companies may coat the step well with "Proflex", "Rhino Liner" or similar material provided The pebble pattern is maintained on the tread and the white nosing is maintained as an added component. This material may be black in color. All surfaces, inside and out, shall be coated. The material used shall meet Wear Resistance ASTMD5963, ASTMD4060 and Slip Resistance ASTM D2047.

Reason for change: Allows body companies to use " Proflex " type material on step wells when practical.

Page 51

Critical Dimensions - Wheelbase, Passenger Capacity, Rear Axle Overhang

School bus body shells shall be mounted on the following school bus chassis and shall meet the following performance specification:

	Minimum Wheelbase	Passenger Capacity	Maximum Rear Axle Overhang
Type "C"	**167 inches**	**34**	**10 feet, 6 inches**
	215 inches	**52**	**11 feet**
	273 inches	**66**	**12 feet, ~~6~~9 inches**
	273 inches	**72**	**13 feet, 6 inches**
Type "D" FC	**228 inches**	**70**	**11 feet**
		74	**12 feet, ~~6~~9 inches**
		78	**13 feet, 4 inches**
Type "D" RE	**Shall be manufacturer's standard**		

Reason for change: Three to six extra inches of body length is needed to properly seat buses and maintain access to emergency exits.

Page 52

FUEL FILL COVER

The fuel fill opening in the body skirt shall be equipped with a spring loaded hinged cover held closed by a driver positioned latch. This latch SHALL BE METAL and shall require prior approval. Locking fuel fill doors are acceptable on propane buses only.

"DIESEL FUEL" shall be painted or decaled on or adjacent to the fuel fill access cover in approximately one (1) inch black lettering.

"LIQUIFIED PETROEUM GAS" shall be painted or decaled on or adjacent to the fuel fill access cover in approximately one inch black lettering for propane-fueled engines installation.

Reason for change: These changes are to assure compliance with NFPA 58 Liquefied Petroleum Gas Code.

Page 54

HEATER DEFROSTER

Defrosters shall be included in the total electrical load for heaters and meet the following criteria:

A. Capable of defrosting the total windshield area in a reasonable period of time under all normal driving conditions.
B. Shall provide means of defrosting service door glass independent of the windshield.
C. Capable of mixing a minimum fifty (50) percent outside fresh air with defrosting air.
D. System shall exceed the SAE standard J381 ~~J382~~ performance requirement without the use of an auxiliary fan and with three (3) gallons per minute one hundred seventy (170) degree water applied.

NOTE: ALL MANUFACTURERS SHALL DEMONSTRATE THE CAPABILITIES OF THEIR HEATING AND DEFROSTING SYSTEM PRIOR TO THE BID AWARD. COOLANT USED FOR HEATER SYSTEMS SHALL MEET ENGINE OEM SPECIFICATIONS.

Reason for change: SAE standard J382 is no longer and active standard.

Page 55

LAMPS AND SIGNALS

CLEARANCE LAMPS

The body shall be equipped with armored (unless flush mounted) clearance and mid-body lamps. These lamps shall be manufactured by Grote, Weldon, Optronics or Sound Off Inc., LED lamps, minimum of four (4) candlepower, or prior approved equal. These lamps are to be mounted at the highest and widest position on the corners.

IDENTIFICATION LAMPS

Identification lamps shall be individually mounted, connected to the chassis headlight circuit and be activated by the chassis headlight switch relay. Lamps shall be manufactured by Weldon, Grote, Optronics or Sound Off Inc LED lamps or prior approved equal.

Reason for change: Vendor requested change. Allows more competition

AGENDA

Page 63

NAME OF PRIVATE OWNER

On the bodies of those school buses leased to the board by private owners, the name of the owner and the word "OWNER" shall be painted or decaled in two-inch black letters just back of the entrance door. ~~in the area just above the fuel fill opening.~~

EXAMPLE: OWNER

JOHN Q. ADAMS

Reason for change: Fuel fill door have been relocated and should not be used to describe the location of this lettering.

Page 64

REAR VISION (OUTSIDE)

The mirror system shall be capable of providing the driver with a view along the left and right sides of the vehicle as required by FMVSS 111. These mirrors shall be heated and remotely adjustable. The heating element shall be equipped with a timer. The mirrors shall be mounted so as to prevent vertical and horizontal vibration. This standard shall be met using Rosco Eurostyle, AccuStyle or approved equal. These mirrors shall be mounted on breakaway arms and breakaway brace.

Reason for change: This mirror is equal to the Eurostyle mirror.

Page 65

OPERATING MECHANISMS (IDENTIFICATION)

All operating mechanisms or controls installed by the bus ~~body~~ supplier shall be identified by the decal or lettering as to its function and operation. These would include such items as electrical switches, levers, the stop arm control valve, the driver's foot warmer vent, the heater fresh air intake, etc.

Page 68

Seat cushions shall be constructed not to depress more than eighty (80) percent when pupil weight equal to three hundred sixty (360) pounds is applied to the total seat area. Cushions shall be constructed for a mid-cushion height of approximately four (4) inches bonded in a manner to provide seating stability and minimize breakage. All seat backs shall have a minimum height of ~~twenty-eight (28) inches.~~ twenty-four (24) inches above seat reference point.

Reason for change: Clarifies the point of measurement for seat back height and uses the same language as FMVSS 222.

Page 70

Crash Barriers

All crash barriers ~~installed in front of all seated positions, including seated locations specially adapted for handicap wheelchair locations,~~ shall be closed to the floor level.

Reason for change: Clarifies the need for all barriers to be closed to the floor.

Page 72

SUPPORT EQUIPMENT

BELT CUTTER

All school bus bodies shall be equipped with a belt cutter installed **in** ~~the driver's accessory compartment.~~ a location accessible and within view of the seated driver. This belt cutter shall be a full handgrip type subject to approval of the Pupil Transportation Branch. If the belt cutter is attached inside the compartment ~~The belt cutter shall be permanently attached to an approved surface area within the accessory compartment~~. the lid of the ~~accessory~~ compartment (outside) shall readily identify the belt cutter located within.

NOTE: ANY ~~OTHER~~ LOCATION SHALL REQUIRE APPROVAL OF THE PUPIL TRANSPORTATION BRANCH AT THE PILOT INSPECTION.

Reason for change: Clarifies the required location of belt cutter and allows the belt cutter to be located outside the accessory compartment.

Page 73

WARRANTY

~~The normal body warranty shall be the manufacturer's standard, twelve thousand (12,000) miles or twelve (12) months. Any body or body component warranty extension greater than standard warranty coverage shall be made available to purchasers.~~ Body warranty shall be five years, 100,000 miles, bumper to bumper, excluding normal wear and tear items. Repairs under $500 parts may be repaired at the district's maintenance facility with the dealer supplying the parts and the district supplying the labor.at the districts discretion. The date in which the body warranty shall begin will be stated as part of the invitation to bid on Kentucky school buses. Major component pass through warranty shall be filed with the Kentucky Department of Education at the pre-bid award conference. All bus bodies shall be warranted against rust through for ten years (not pro-rated).

Reason for change: Clarifies various sub-component warranties

Page 74

PUSH-OUT WINDOWS

Type "A", "C", and "D" school buses shall be equipped with push-out windows. The windows shall meet the requirements of FMVSS 217. The windows may be horizontally or vertically hinged provided the same type is used for the entire order. ~~They shall require a maximum clear area available, as referenced to the position of the seat~~

~~backs (refer to "SEATS (PUPIL)").~~ The windows shall be identified for emergency egress with decals on the inside and outside. Decals shall be of the same manufacturer and type as used on the emergency door (refer to "EMERGENCY DOOR"). Decals may be placed on the lower glass area near the release handle subject to the approval of the Pupil Transportation Branch. Decals shall be applied on the outside of the glass so the student cannot peel the decal off. (Requires reverse print decal).

Reason for change: All push out windows are now 22 by 24 inches and are hinged forward. This old standard was written for 22 by 18 inches top hinged windows. This part of the standard is obsolete.

Page 80 **BRAKES**

GENERAL REQUIREMENTS

All brake lining shall be of asbestos-free material. All hydraulic brake systems 16-22 passenger shall be equipped with an antilock brake system

Reason for change: This section is transferred from Section I, Part 1 to Section II, Part 1. The 16 -22 passenger buses are the only hydraulic buses still being purchased. All hydraulic brake information is now in one location.

Page 88

The controls pennant shall be mounted and accessible to the operator from the outside of the bus. It shall be protected by a re-settable circuit breaker within the lift manufacturer's specifications. ~~The outside~~ ~~vertical post shall be padded to below barrier height.~~ The platform shall be thirty-inches wide at a minimum, with the power provided through the ignition switch energizing a separate solenoid. The solenoid on all twenty-four (24)-passenger buses shall be located under the hood. A ground cable shall be installed from the lift frame to the vehicle frame of the bus.

Reason for change: This standard was written for the Braun 211 series lifts. The state now uses the Braun 917 series. This portion of the standard is no longer needed.

Page 100

ENGINE BRAKE

An engine brake may be factory installed on type C and D buses. The engine brake shall be integrated into the engine and shall not be a stand-alone or aftermarket addition. The engine brake shall not increase the noise level, when activated by more than two (2) decibels.

Reason for change: Allows the use of engine brakes as a local district option.

Page 105

Compliance with FMVSS

All propane powered buses shall be in full compliance with all applicable Federal Motor Vehicle Safety standards as well as CMVSS 301.1 (LPG Fuel System Integrity).

AGENDA

Propane Powered Chassis Modification

A propane fueled engine may be installed on sixty-six (66) and seventy-two(72) passenger type C and Seventy-eight (78) passenger type D, FE school buses as a local district purchase option. These propane powered buses shall be designed to improve fuel economy while decreasing emissions.

All propane powers buses shall be equipped clearly marked ~~in one inch block letters~~ with lettering and decals as required by NFPA 58 'Liquefied Petroleum Gas Code' to enable first responders to readily identify the vehicle as being fueled by propane.

All propane systems shall be factory installed by the Original Equipment Manufacture on new buses only.

The propane powered chassis shall comply with all specifications for a Type C school bus with the following exceptions and additions:

Fuel tanks

1. Minimum ~~70~~ 60 gallon mounted between the vehicle frame rails and shielded under the bus.
2. Optional ~~100~~ 90 gallon mounted between the vehicle frame rails and shielded under the bus.

Propane Identification

A propane vehicle emblem or label shall be affixed to the ~~rear bumper.~~ right tag panel. An emblem or label shall also be affixed to the right side of the bus rearward of the entrance door and to the left side of the bus aft of the driver's window. LIQUIFIED PETROLEUM GAS ~~ONLY~~ sign shall be affixed above the fuel fill door in minimum one inch block letters. The fuel door shall be lockable. Cut off valves to the tanks shall be clearly labeled.

Transmission

A propane fueled bus shall use a Ford 6R140 or an Allison 2300/2500 series transmission.
Transmission shall be filled with ~~TES 295 fluid.~~ synthetic fluid approved by the transmission supplier

Warranty

All propane systems shall be factory installed and backed by a five year unlimited mileage warranty on components related to the fuel system (tanks, valves, injectors) all other warranties shall be as stated in the Kentucky Minimum Specifications, Section I parts 1-2.

Reason for change: Clarifies the fuel leakage standard, Useable storage capacity, propane identification language and allows the uses of proper transmission fluid for various transmission options.

Page 107

STORAGE COMPARTMENTS

Kentucky school districts may install under floor, skirt-mounted key-locked storage compartments as optional equipment on fifty-two (52) through eighty-four (84) passenger school buses. Storage compartments shall be of the largest capacity available as standard production for the rated pupil capacity school bus. Kentucky school districts may install one (1) storage compartment on the left side center of a fifty-two (52) passenger school bus body and three (3) storage compartments, on a sixty-six (66) through seventy-eight (78) passenger buses, or any combination thereof, on the left side center, left side rear and/or right side rear (depending on exhaust routing) and the right side center. The storage box shall be sealed to minimize dust and water leakage.

Kentucky school districts may retrofit under floor, skirt-mounted key-locked storage compartments in Kentucky school buses. Catches shall utilize a rod type mechanism. (Cable release catch mechanisms may be utilized if provisions are made in the compartment design to permit opening of the compartment door in the event that the cable breaks or becomes detached.) Storage compartments must be manufactured by the body company who originally manufactured the school bus body on which they are to be installed. Under skirt storage compartments shall be installed as per original equipment the manufacturer's instructions.

Reason for change: Allows the use of cable type releases on storage boxes.

Page 107

WINDSHIELD TINTING

Local districts may, at their discretion, tint the upper one-fourth (¼) of the windshield and driver window. Tinting shall not exceed 28% light transmittance. Drivers window tinting may not interfere with the drivers sight line of the rearview mirrors.

Reason for change: Local district have requested the tinting on the drivers upper window glass be allowable.

EPA Emission Requirements

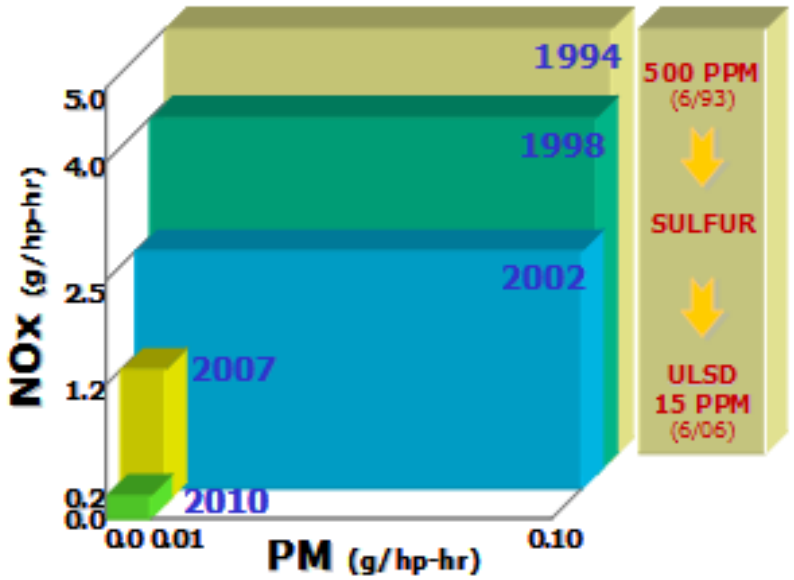

AGENDA

Service Writing Notes

1. Good service writing allows you to track maintenance.

2. If another mechanic can look at the Vehicle file folder and know what needs to be done then the writing is sufficient.

3. We do not want them to write a book however we need to have sufficient detail to allow us to pick up where he left off without overlap.

4. In many cases the part used will tell the story. In some cases an entry will be necessary. Remember we are trying to communicate to the next guy what need to be done to the vehicle.

Example: A U-joint in a bus broke. When you look back at the file you can find no record of the chassis ever being lubed in ten years of service. Now we know that every time he changed the oil he lubed the chassis because it is what we do but now someone has a question and it would be better if the mechanic would have written oil chance/lube.

5. Certain pieces of information must be on the work order.

a. District Name

b. Body Side number

c. Odometer reading.

d. Date of work.

e. Initials for each function performed.

f. Inspector initials before bus is released back to the driver.

g. Hours to complete work.

h. Parts used and their costs.

6. If any of these basic parts are missing then the work order is incomplete. We cannot release a bus with an open work order.

7. If more detail is needed to describe the work turn over the work order and write what ever in necessary to allow the next mechanic to follow along.

8. This applies to electronic work orders as well, we are trying to have enough detail to track maintenance, too much detail is better than no detail but getting it just right is what we really want.

AGENDA

Memorandum

Subject: Select Transportation Directors

From: Kay Kennedy, Director
Division of District Support

Date: August 20, 2007

Subject: Recommendations For use of Carpenter Buses

It has been four years since the Alachua County, Florida School Bus rollover incident. In this incident the roof section of the body separated from the remainder of the body. As a result of this incident and the follow up by the National Highway Traffic Safety Administration a memorandum was sent from this Office asking local districts take certain actions. The Department wishes to reiterate these recommendations at this time.

The Department recommends that these buses be taken out of service as soon as possible and sold with a material value only or "junk" title to preclude their sale to unsuspecting purchasers.

This advisory applies to all Carpenter buses built at the Mitchell, Indiana plant prior to 1996. These buses use a wall and cap construction method that includes a carlin rail. The welds on this carlin rail are subject to breakage over time and must be inspected monthly if the bus is to remain in service. All School bus inspectors have been trained to inspect these welds.

Any cracked or broken welds must be repaired by a certified welder as be taken out of service until these repairs are made

If you have questions, contact Dave Mangum or myself at (502) 564-4718.

KK/DM

cc. Dr. Larry Stinson

AGENDA

TES 295™ Approved Fluids

When seeking a fluid for your Allison transmission that is TES 295™ approved do not fall to the claims of some companies that claim that their product is TES 295™ approved. The statements infer that these products "are designed to meet", "are equivalent to", "meet or exceed", etc. When determining whether or not a fluid is TES 295™ approved, look and/or ask for one of two things:

- The Allison TES 295™ approval number
- The Allison Approved logo

Approved Product Listing as of 3/28/2011

TES 295 Approval Number	Approved Marketer	Product Brandname
AN-011001	Castrol Heavy Duty Lubricants	TranSynd
AN-031002	BP Lubricants	Autran Syn 295
AN-031003	Cognis Corporation	Emgard 2805
AN-031004	International Truck & Engine Company	Fleetrite Synthetic ATF
AN-051005	ExxonMobil Lubricants and Petroleum Specialties Company	Mobil Delvac Synthetic ATF
AN-071006	John Deere & Company	HD SynTran
AN-1010007	Volvo Trucks North America	Bulldog Synthetic ATF

ALLISON APPROVED
COMPLIES WITH
TES 295
SPECIFICATION

Table Of Contents

FLUIDS
Engineering Specifications for Fluids
TES 295™ Approved Fluids
TES 468 Approved Fluids
TranSynd™ RD for Off Highway
Oil Analysis
OEM Installation and Service Support Materials
Schedule One TES 389 Fluids
TES 295™ Fluids Product Information Links
C 4 Approved Fluids

AGENDA

•

Downloads

TES 439
TES 468

Popular Links

- Global Map
- My Allison
- Sales & Service Locator
- Military Products
- Home

Vocational Models

- Highway Series
- Pupil Transport/Shuttle Series
- Bus Series
- Motorhome Series
- Emergency Vehicle Series
- Truck RV Series
- Rugged Duty Series
- Oil Field Series
- Specialty Series

Popular Models

- 3000 RDS
- 4000 RDS
- 2200 HS
- 3000 HS
- 3000 MH

Related Benefits

- Load-Based Shift Scheduling
- Allison Transmission Startability
- Superior Fuel Efficiency
- Allison Electronic Controls Package
- Allison Optimized 2010
- 2nd Reverse 2010
- Allison Prognostics
- Fluid and Filter Change
- Shift Energy Management (SEM)

DRIVING TRANSMISSION TECHNOLOGY® | EXPERIENCE US ON

TERMS OF USE | PRIVACY POLICY

Copyright © 2011 Allison Transmission Inc.

AGENDA

Parts Procurement

The Statues and the

REALITY

First

We will look at the

Statues part of

Parts Procurement

Kentucky Model Procurement Code

The Commonwealth of Kentucky was the first state to adopt Model Procurement Code legislation (KRS 45A), which sets out the methods by which Kentucky state government must bid, negotiate and award contracts. The preferred and most commonly used method for purchasing is by competitive sealed bidding.

AGENDA

KENTUCKY MODEL PROCUREMENT CODE

45A.300. Cooperative purchasing.

Any public purchasing unit may either participate in, sponsor, conduct, or administer a cooperative purchasing agreement for the acquisition of any supplies, services, or construction with any other public purchasing unit or foreign purchasing activity, in accordance with an agreement entered into between the participants. This cooperative purchasing may include, but is not limited to, joint contracts between public purchasing units and access by local public purchasing units to open-ended state public purchasing unit contracts.

Nothing in this code shall limit or restrict the ability of local school districts to acquire supplies outside of the public purchasing agreements when the supplies and equipment meeting the same specifications as the contract items are available at a lower price elsewhere and the purchase does not exceed two thousand five hundred dollars ($2,500).

AGENDA

PURCHASING

Purchasing in a Kentucky school district represents the expenditure of a large portion of its budget. Although needs and requirements may vary from district to district, this chapter is intended to furnish districts with guidelines and procedures, which can be adopted or adapted as individual situations may dictate. The principles set forth here can be applied to all purchasing in general, even though this particular chapter addresses itself solely to transportation purchasing.

FUNDAMENTAL CONCEPTS

It is mandatory that officials charged with purchasing responsibility conduct all aspects of procurement on the basis of sound business principles. Transactions should be fair and contribute toward good relations with staff, community and suppliers. The purchasing function can assist the educational program in achieving goals through procurement of needed supplies, services and equipment. In carrying out its responsibility, the purchasing can be both efficient and economical. The fundamental concepts of any procurement program should be based on the following:

1. Buy the quality standard for the purpose required.
2. Have the product or service available at the time and place requested.
3. Purchase on the most feasible and economical basis.
4. Purchase from the lowest responsible bidder or supplier meeting the required specifications.

ESTABLISH AUTHORITY

The Local Board of Education should appoint or designate the person or persons to whom the procurement functions are delegated. The administration of the school purchasing function is often the responsibility of a school official who fulfills other roles for the school. In smaller school districts, the purchasing responsibility may be combined with other assignments, such as a director/supervisor or transportation director, assistant superintendent or superintendent.

AGENDA

SUGGESTED BOARD POLICIES

Procurement of supplies and services is one of the major business responsibilities of the local Board. The mechanical functions of procurement may be delegated. However, under law, the Board has the sole authority and responsibility for all purchase contracts of the district.

Some suggested policies to be established by the local Board of Education are as follows:

1. The duties of purchasing should be assigned to designated individual(s).
2. The officials charged with purchasing should be familiar with, and perform all activities within, the limitations prescribed by law, legal opinions, and in accordance with Board policies.
3. Every transaction between a buyer and a seller involving the transfer of property should be maintained on a contract or purchase order with adequate supporting records.
4. Approval of purchase orders should be recorded in the minutes of the Board, as well as in bid tabulations, awards and contracts.

PURCHASING FUNCTIONS

The purchasing function encompasses the entire transaction, beginning with the initiation of a regulation and ending with the approval of the invoice for payment. Some control factors which precede the purchasing functions are:

1. Budget allocations. Get with your treasurer
2. Establishment of standard list.
3. Ordering schedule.
4. Obtaining necessary approvals. Over 2500.00 Superintendent has to sign

The purchasing transaction is completed when the items requisitioned have been received in good condition and the supplier has paid the proper amount.

The basic functions of procurement are:

AGENDA

1. REQUISITIONING

It is recommended that a written request be initiated in accordance with
established local Board of Education procedures. Information to properly identify the items being requested should be included, and provisions should be made for the approval of the requisition.

Once approved, the requisition is processed for purchasing via one of five of the following methods:

Telephone quotation.

Written quotation.

Formal bids.

Negotiated bids.

Cooperative bid lists.

£ Purchase from state price contracts.

Upon approval, a purchase order or contract may be issued. If possible, the requisitioner should be provided a copy of the purchase order to verify the items being purchased, the terms, the conditions of purchase and expected delivery date.

2. SPECIFICATIONS PREPARATION

The Association of School Business Officials of the United States and Canada describes a specification as, "A description of the goods or services to be purchased in terms of the minimum acceptable physical characteristics, as well as the terms and conditions relating to delivery and performance."

Writing good specifications is an exacting assignment. They may be written by the director or supervisor of pupil transportation. A poor specification, one, which is worded in broad and general terms, usually attracts quotations from a large number of suppliers and is likely to invite marginal or unreliable bidders. Good specifications go a long way in eliminating this problem and, when enforced, protect the school district.

Many times school suppliers are asked to help in the preparation of specifications. In such instances, care should be taken to see that other companies are not eliminated from bidding.

There are three (3) types of specifications commonly used. They are:

a. Brand Name with Number - Brand name with number should be used only if there is a qualifying statement, such as, "or equal" or "for specification purposes only." Brands that are used as specifications should be well known among all suppliers. Catalogs should be available which list the specified items with number and general descriptions. The bid form should provide a space for a bidder to write in the particular brand and the number he/she is bidding if quoting other than the one listed on the specification. An advantage of this type of specification is that it requires a minimum of time to prepare.

Suppliers are usually brand conscious; therefore, it is easy for them to determine exactly the quality and type of material being bid.

On the negative side, such specifications may be challenged on the basis that bids have to be evaluated subjectively. Another criticism might be that the brands listed are those favored by the school district.

When the school district has predetermined the quality desired, only qualified items should be considered. In doubtful situations, a detailed description should be requested. It should also be stipulated that any item not meeting all aspects of the specification should be fully described and the item identified as an alternate bid.

General Description - This specification involves the use of brand names and numbers in a general manner, which is intended to indicate the quality desired. This approach has considerable merit because it indicates the degree of workmanship and a brief description to indicate size, color, material, etc. If certain general descriptions are listed on the specifications, they should be included in the brand specified.

Complete Description - The complete description specification should be used when large quantities of exact requirements have significance. Such specification requires considerable research and knowledge on the part of the writer to ensure that needed characteristics or qualities have been included. When a formal bid is required, a complete and detailed specification should be prepared.

AGENDA

3. BIDDING

The third step in the procurement function concerns receiving bids. The Kentucky Revised Statutes, court decisions and opinions of the Kentucky Attorney General, direct school districts to follow certain procedures in the purchase of materials and services. Though many statutes regulate purchasing, the most important of these are the Model Procurement Code KRS 45A and KRS 424.260 Section 2. KRS 424.260, Section 2 states: "Except where a statute specifically fixes a larger sum as the minimum for a requirement of advertisement for bids, no city, county or district, or board of commission of a city or county, may make a contract, lease or other agreement for materials, supplies and equipment (except perishable meat, fish and vegetables) or for contractual services other than professional, involving an expenditure of twenty thousand dollars ($20,000) without first making newspaper1 advertisement for bids. Provided, however, that this requirement shall not apply in an emergency if the chief executive officer of such city, county or district has duly certified that an emergency exists, and has filed a copy of such certificate with the chief financial officer of such city, county or district".

For bidding to be of the greatest benefit to a school district, the school district must be careful to adopt business practices and methods that conform to legal requirements. This means writing bid conditions and specifications, which are in the best interest of the district, and securing sealed bids for those materials and services,

which, are to be purchased. Efforts should be made to secure a minimum of at least three (3) bids to ensure more competition and better prices.

AGENDA

WHEN TO BID

If it can be determined that items or categories of items will exceed a cost of $20,000, then these items should be bid. Such items must be bid even if the items purchased will be delivered to more than one location within the district so long as, collectively, the purchase to be made exceeds or will exceed $20,000.

When a lack of storage facilities or other circumstances make it impractical to receive the total quantity at one delivery, the conditions in the bid may specify staggered deliveries. Although, in such instances, it would probably be better from a record keeping standpoint to bid the item(s) more than once a year, thereby allowing one check per contract period.

METHODS OF SECURING PRICE INFORMATION

Telephone or Verbal Quotations - This is least desired and should be used only in rare situations when goods and services are urgently needed. At least two (2) quotations are recommended and they should be kept on file.

Written Quotations - These are frequently used to secure prices on small quantity purchases and items of limited competition. At least two (2) quotations are recommended and they should be kept on file.

Note: The above described quotations would not qualify as methods for securing prices where formal sealed bids are required by law.

3. Formal Sealed Bids - This method is the most commonly used in Kentucky school districts. Sealed bids should provide for:

Complete specifications and terms or conditions.

Prompt return, normally within two (2) weeks.

At least three (3) prospective bidders.

d. Advertisement of the bids in accordance with KRS 424.130(b) and provision for public opening at a designated date, time and place.

4. Negotiated Prices - While not frequently used in the procurement of supplies and materials for school systems, they may be utilized to obtain service contracts in which the full extent of work or the materials required is unknown, and the specifications cannot be predetermined.

13. How contracts are to be awarded.

AGENDA

Pricing instructions such as, unit price, all or none basis, or by groups. (Procedures for price increases must be spelled out.)

Length of time bid price is to remain firm.

Or equal clause.

A statement that the local Board has the right to accept or reject all proposals.

CONTRACTS AND PURCHASE ORDERS

The school district should provide the vendor with a written contract or purchase order which lists all aspects pertaining to the purchase of items as shown. The award should be made to the lowest responsible bidder meeting all specifications. In cases where formal bids have been received, official action by the Board should precede such award and preparation of the purchase order. The typed purchase order should show complete specifications for each item listed, or if this is too lengthy, a statement should be included to the effect that, "The materials and services furnished herewith will be in accordance with the specifications and conditions as listed on Bid Number...". If all information is not shown on the purchase order, be sure that the requisitioner has a copy of the complete bid proposal, including specifications for checking receipt of materials ordered.

Follow-up Procedure

Contract with the vendor may need to be made to ensure expected delivery dates. Follow-up is especially important when late delivery of materials may hinder the school program. An efficient follow-up procedure should include the assignment of responsibility to a designated individual, special purpose forms, a tickler filing system and prompt advice of material receipts.

Receiving Procedure

The requisitioner is responsible for the proper receipt of goods and services, if such material is designated for delivery to him/her. Immediately upon receipt, goods and services should be checked for condition, quality and quantity as stated on the contract or purchase order. This function can be accomplished by having the packing list or invoice signed, or completion of a preprinted receiving ticket, either of which may be forwarded to the central office for substantiation of delivery. The supplier's invoice may then be processed for payment.

Quality Control and Testing

AGENDA

The official having purchasing responsibility should check to make sure items purchased conform to the standard of quality desired. This can be done by any combination of the following methods:

1. Comparative sample.
2. The use test.
3. Laboratory test and analysis.

It is important to note, at this point, that the best specifications and bid procedures are meaningless unless deliveries are in full compliance with the specifications and/or purchase order. Deliveries, therefore, must be certified before payments can be made and care should be exercised to ensure that the items received are those ordered.

CHECK POINTS FOR INSPECTION AND QUALITY CONTROL

Some suggested guide points to be observed are:

1. Check for accurate count.
2. Sampling and testing if deemed necessary.
3. Check for breakage or shortage.
4. Compare items received against the specifications on the purchase order or the bid contract; and if a laboratory test is required, make arrangements immediately and advise the parties concerned.

PAYMENT PROCEDURE

The final step in the procurement function is to pay the correct amount for the items purchased and received in accordance with the contract or purchase order. In all instances, cash discounts should be taken, if applicable. The basic steps in the procurement function and the responsibility for action are as follows:

1. Requisitioning - Initiated by the user, sent to the official charged with purchasing responsibility and copy retained by the school.

2. Specifications - Prepared in detail setting forth minimum acceptable physical characteristics as well as terms and conditions relating to delivery and performance.

AGENDA

Parts Procurement

THE

REALITY

AGENDA

Kentucky Purchasing Coop

- HOW IT WORKS
- Lets go to the web site
- You can put in KPC or
- http://kybuy.org/
- http://kybuy.org/bidbook/current/selectmember.asp
- Go to your county
- If you do not know vendor click on search by catagory

AGENDA

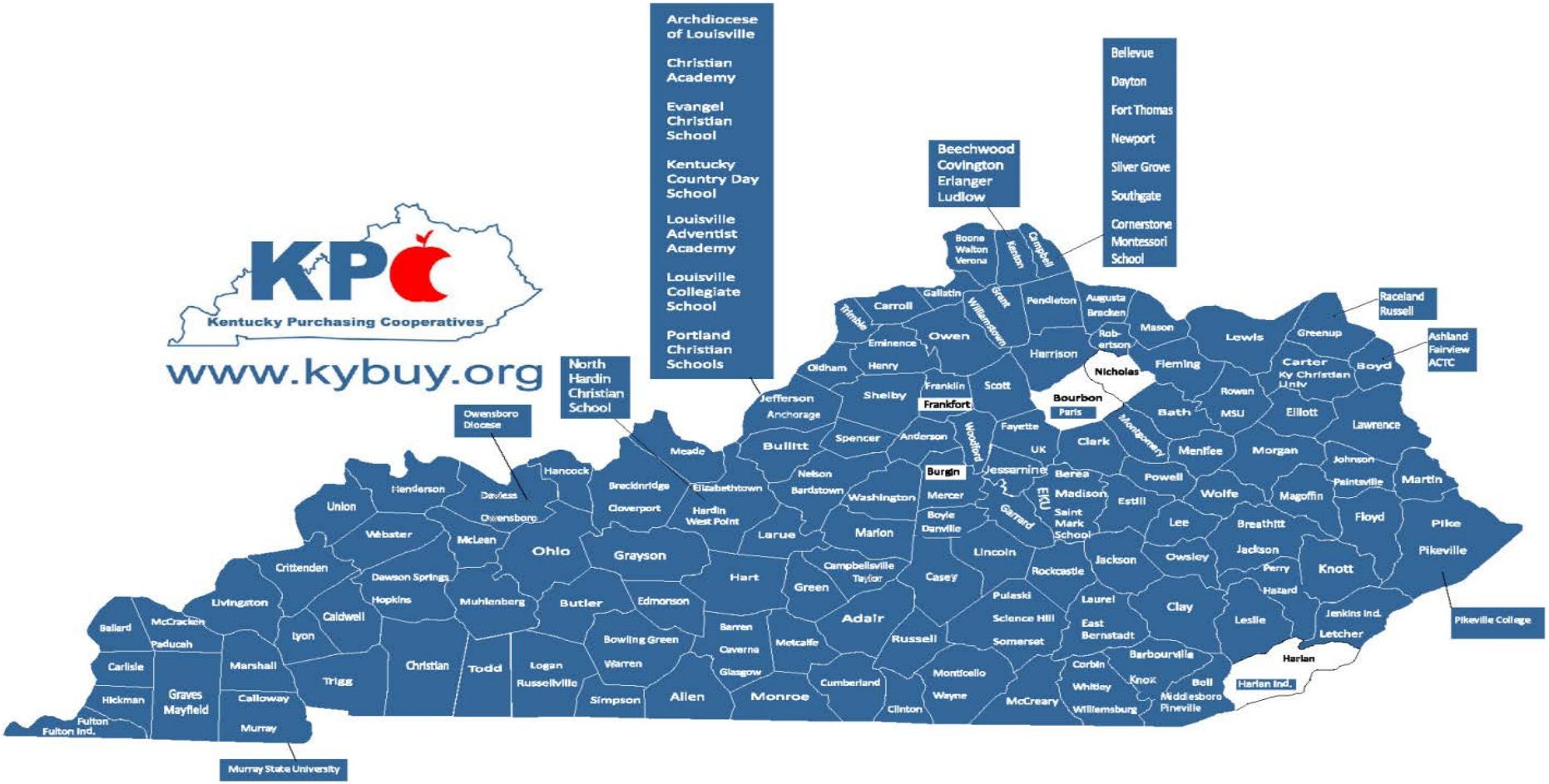

KPC Members Shaded in Blue

Revised 02/19/13

Can we buy from someone else?

- Yes
- Requirements
- They have a GSA Contract
- This is a government contract in which the vendor will have a number GS-xxx-xxxxx.
- This allows them to sell to government agencies.
- Just write the GSA number on PO & Invoice

AGENDA

You can order from someone with a GSA number without bidding. YES

Why?
GSA (Government) has done bidding already.
You can buy from any vendor with a GSA #
Say you want a 295 75R 22.5 Goodyear Tire
On a GSA bid list the price is the same across the board. You may check to make sure they are not raising the price on you but it should be the same.

CAN I BUY FROM LOCAL PARTS HOUSE?

YES, but they are to be your local boards bid list.
WHAT DOES THIS MEAN?
Once a year your board sends out bid list to each vendor they will use the coming year.
When they do, make sure they send out a bid list to local parts houses or any vendor your shop may use that is not on the KPC bid list or GSA list.
They will need to fill out bid sheet and send it back in with some sort of catalog to show products.

To be legal you must have a vendor on the local boards list to buy from them.

SAY YOU HAVE 3 LOCAL AUTO PARTS VENDORS ON THE LIST, CAN YOU BUY FROM JUST ONE OF THEM?

NO, you must get bids on parts needed from each of them and / or anyone else you may use for that part.

Lets look at an example.

AGENDA

Vendor	Part / Discription	Price/ per item	Warranty
	Black Paint / Krylon/ 12oz		
Service Auto		$3.75	
Napa		$2.99	
Advance		$4.00	
	MD 3060 Transmission		
	Allision/ W Torque Converter		
Weller		$3,100	1
International		$3,200	5
Cambridge		$3,300	6months

Notice the Part / Description be detailed in what you order. Why? To compare apples to apples

WHICH ONE OF THESE WOULD GET THE BID ON THE TRANSMISSION IF YOU WERE BIDDING IT?

AGENDA

Vendor	Part / Discription	Price/ per item	Warranty
	Black Paint / Krylon/ 12oz		
Service Auto		$3.75	
Napa		$2.99	
Advance		$4.00	
	MD 3060 Transmission		
	Allision/ W Torque Converter		
Weller		$3,100	1
International		$3,200	5
Cambridge		$3,300	6months

Weller is cheaper but International would get the bid if I were buying it. Why? WARRANTY

If have part number include in description

Is this legal since Weller was cheapest? Yes because of difference in warranty you can justify buying the higher price one.

For 100.00 dollars you get 4 more years warranty = Justified.

AGENDA

Say you want a specific name brand part or fluid.

Example I use 15W40 Shell Rimula oil when I bid I put Shell Rimula 15W40
Others will bid an equivalent and maybe cheaper but I do not have to take equivalent because I was specific in what I wanted.

Trans synd Transmission Fluid the only maker of this is Castrol there are equivalents according to manufactures but I specify Castrol Trans synd. They will call and say you have to take there's because it is equivalent, NO YOU DO NOT. If you specify.

Can I buy from someone who is not on local bid list or KPC, GSA?

Yes, if EMERGENCY

What constitutes an EMERGENCY? That depends on YOUR situation.

If I need a part and the highest bidder is the only one who has it in stock and I need that bus up & running like now. Can I buy it and be legal? Yes!

If you have 8 buses in your fleet with 1 spare and the spare is in use and bus (that is down) is needed, that would constitutes an emergency need.

If a bus is down, full of kids and I need to get it up and running can I just buy a part?
YES – if it was something the parts house has, you can go to closest one and get part, without bidding regardless of price.

How can you do this and get by with it Remember EMERGENCY NEED!! Got to get students off side of road and home.

AGENDA

HOW CAN BIDS BE DONE

Telephone quotation.
Written – Faxed quotation.
Cooperative bid lists.
Purchase from state price contracts.

The 2 you will probably use most often in your shop

1. Over the phone quotes

2. Faxed

Faxed is better of the 2, you have a record of the bid in case of questions
When a part is needed you usually need it quick.

AGENDA

DO NOT'S OF BIDDING

If you do one of these you could get into trouble

Buy from immediate family
Buy from a friend that owns a parts house without bidding.
Take money or materials for awarding a bid
Use the good ole boy system – help me I'll help you
Manipulate Prices – get price and call next person or buddy and say Napa said 3.00 let me have it for 2.00 and I will buy it from you.
Continually buying without bidding
Continually buying from same vendor without bidding

This is some Do Not's of bidding if you use ethical bidding habits and common sense you can do bidding, be legal and stay out of trouble with the boss and the law.

Questions

Happy Bidding

AGENDA

SynTec's S3C Integrated Child Seat Features

SYNTEC SEATING SOLUTIONS
A Takata Company

AGENDA

SynTec's S3C Lap/Shoulder Flex Seat Features

SYNTEC SEATING SOLUTIONS
A Takata Company

AGENDA

From: Kochanek, Kevin R
Sent: Tuesday, March 17, 2015 6:45 AM
To: Bruce, Douglas G
Subject: Fwd: Dcps invoice for 1013

Doug

Below is a remain which is approx have the price of the new component

Sent from my iPhone

Begin forwarded message:

From: "Lewis, Daniel C" <Dan.Lewis@Navistar.com>
Date: March 16, 2015 at 10:50:54 AM CDT
To: "Kochanek, Kevin R" <Kevin.Kochanek@Navistar.com>
Subject: RE: Dcps invoice for 1013

Hi Kevin,

Sorry for the tardy reply. The reman equivalent is ZBH79A7618 which is set up at a DNET of $564.33.

Please let me know if you need anything else. Thanks

Kind Regards,
Dan Lewis
Product Manager
331.332.3676
dan.lewis@navistar.com

From: Kochanek, Kevin R
Sent: Thursday, March 12, 2015 3:32 PM
To: Lewis, Daniel C
Cc: Bruce, Douglas G
Subject: FW: Dcps invoice for 1013

Dan

Could you look into this issue below. This bus takes a HOR99a4618 which is a D-net $1000, I was going to offer up the remain equivalent Horton has been promoting prt # 79a7618 but it is not coming up in the parts sytem

Thanks

-Kevin

Why are you always harping on proper inflation pressure?

Tires are called "pneumatic," from the Greek word "pneuma," meaning "air, wind or breath." And there's a reason for that.

What supports your cargo is pressurized air, NOT your tires. The tire is just the container – that holds the air – that supports the load.

But why so much fuss about exactly the right pressure?

The right inflation pressure can minimize many types of irregular wear. And that means higher removal mileages and reduced tire handling costs. In other words, tires last longer when properly inflated.

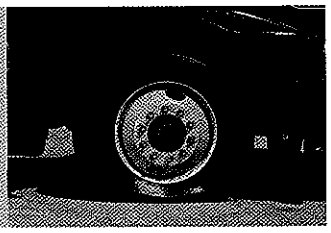

Clearly, it's not the tire that supports the load, but pressurized air inside it.

How much longer?

The Maintenance Council (TMC) reports that 10 percent underinflation will shorten tread life by 9 to 16 percent.

If we use an average tire price of $250, that underinflation costs you $25 per tire. And, because you'll change tires more often, you'll pay more in tire service fees, along with downtime.

And how many drivers and maintenance people, if they had a target inflation pressure of 100 psi, would consider 90 psi (10 percent underinflated) "close enough"?

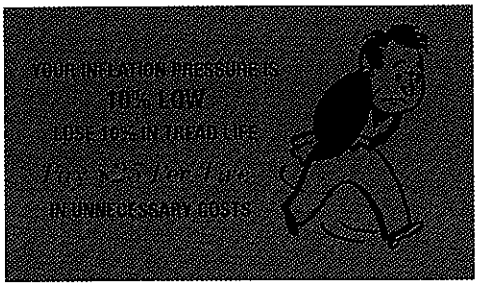

What if the underinflation is worse than that?

TMC suggests that each 10 percent results in a similar loss in tread life.

So 20 percent underinflation could cost you $50 per tire. And if underinflation exceeds 10 percent, you may have bigger problems. Like flats and emergency road service calls that can cost anywhere from $100 to $1,000.

Both TMC and the Rubber Manufacturers' Association (RMA) recommend that any tire found to be 20 percent or more underinflated should be immediately removed from service, demounted and inspected for damage.

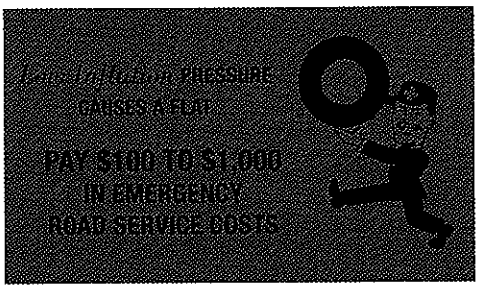

What about duals?

If the tires don't match in diameter, the smaller tire is dragged along by the larger.

This can result in extremely rapid and irregular wear on the smaller tire. If duals differ in inflation, their diameters can differ enough to cause this kind of problem.

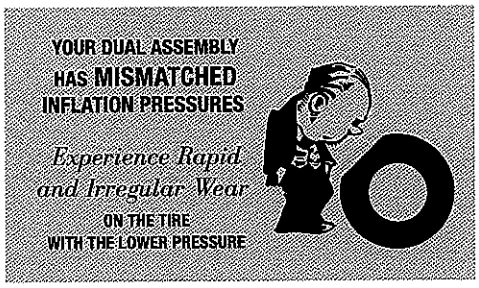

Are wear and fuel economy the only losses?

They're just the beginning. Imagine bending the sidewall of a tire with your hands 500 times a minute. A truck tire goes through a full revolution, flexing all the way around, about 500 times per mile. At 60 miles per hour – a mile a minute, that's 500 times a minute. Tire engineers call this flexing "deflection." With underinflation, there's even more deflection, consuming more energy and using more fuel.

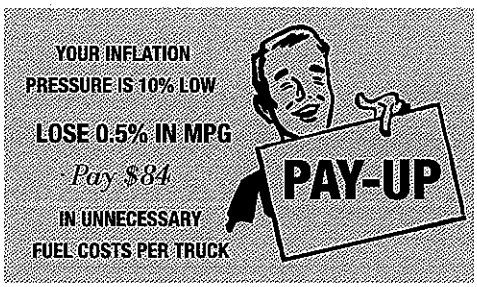

How much more?

Underinflation by 10 psi will probably cost you about 0.5 percent in miles per gallon. If you currently get 6 mpg, it would drop to 5.97 mpg. At 100,000 miles per year, you'd use an extra 84 gallons of diesel, or about $84 per truck, just in wasted fuel.

Are there any other losses as a result of underinflation?

Unfortunately, lots of them.

Remember what we said about "deflection"? Excessive deflection weakens steel cords excessively. And it's accepted as a fact in the tire industry that underinflation is a major contributor to premature tire removals.

But even if things don't go that far, flexing can generate excessive heat, the enemy of tire casings. Just as time ages people, heat ages tires. And, if you've been accustomed to getting 2 retreads from each casing, you may discover that your average has dropped to 1.5.

What would that cost?

If your casings are worth $60-$80, instead of getting a useful retread, you could lose that much, plus the $3-$7 disposal fee required by most states.

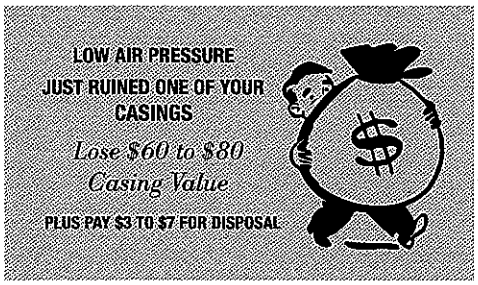

Why don't you just make tires that don't leak?

Because the gas molecules in air are too small. Eventually they can diffuse through the rubber of a tire, and escape into the atmosphere. This doesn't happen quickly, but it means you can lose up to 2 psi per month through diffusion alone.

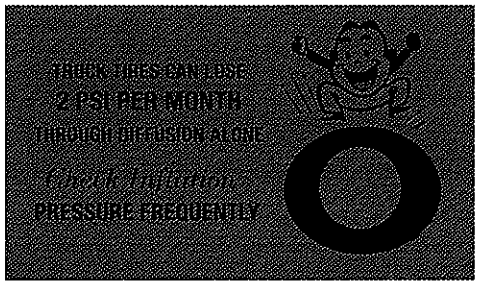

What can we do to prevent pressure losses?

Check pressure regularly. Use a good gauge, and calibrate it often. (In a future issue of *Real Answers* magazine, we'll show you how to build your own master gauge.)

To keep air in, keep wheels clean and properly lubricated. And, make sure valve stems and cores are in good condition.

Finally, quality metal valve caps are a must. Caps are the primary seal against valve leaks, and also keep dirt and water out of the mechanism.

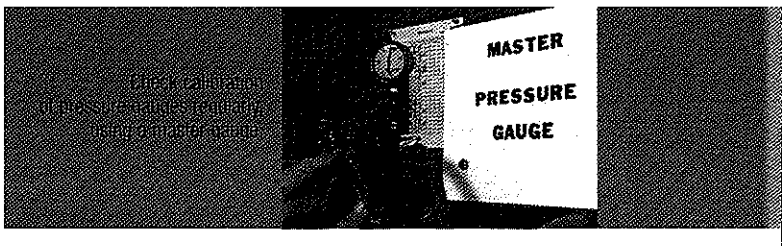

Why is that important?

A valve core is a mechanical device that must seal at very high pressures. If a tiny bit of dirt gets in, it can prevent proper sealing.

Likewise, just as water can freeze and crack concrete, water can freeze inside valve stems, disrupting the seal.

But it does cost something to check air pressure, doesn't it?

Certainly. But according to TMC data, it only takes about 20 minutes to check and adjust inflation pressure on an 18-wheeler. If you do it every week, chances are you'll have very few problems with underinflated tires.

That means increased uptime, better fuel efficiency, longer tread life and improved retreadability – all of which can put real money into your pocket.

AGENDA

NAVISTAR

OPTIONAL SERVICE CONTRACTS

CTS-2110

POLICY ISSUED BY: DEALER NAME		
CITY		DEALER ACCOUNT NUMBER
STATE/PROVINCE		POSTAL ZONE
YEAR	MODEL	VEHICLE APPLICATION
VEHICLE IDENTIFICATION NUMBER (FULL 17 DIGITS)		
ENGINE SERIAL NUMBER		
DATE OF DELIVERY TO USER (DTU)		ODOMETER READING AT DELIVERY
ABOVE INFORMATION MUST AGREE WITH DELIVERY TO USER (DTU) FORM AND DELIVERY INFORMATION ESTABLISHED BY RETAIL SALE		
CONTRACT HOLDER'S NAME		
STREET		
CITY		
STATE/PROVINCE		POSTAL ZONE

COVERAGE	SERVICE CONTRACT NUMBER	CONTRACT TERMS TIME MONTHS	CONTRACT TERMS DISTANCE - MI/KM (000)
VEHICLE SERVICE COVERAGE			

CUSTOMER: I HAVE REVIEWED THE OWNER / OPERATOR'S MANUAL FOR THIS VEHICLE AND READ THIS WARRANTY AGREEMENT AND:
(1) I UNDERSTAND THE OPERATION OF THIS VEHICLE, (2) I UNDERSTAND AND ACCEPT THE TERMS OF THIS WARRANTY AGREEMENT, AND (3) I ACKNOWLEDGE RECEIPT OF A COPY OF THIS WARRANTY AGREEMENT.

CUSTOMER SIGNATURE_____ DATE_____

DEALER: (1) YOU MUST REVIEW THE STANDARD WARRANTY AND THIS EXTENDED WARRANTY SERVICE POLICY ALONG WITH THE OWNER / OPERATOR'S MANUAL WITH THE CUSTOMER AT THE TIME OF SALE, (2) FOR U.S. AND CANADIAN SALES, SUBMIT A COPY OF THIS CONTRACT TO: **SERVICECONTRACTS@NAVISTAR.COM**
OR FAX TO : (630) 753-7061.

DEALER SIGNATURE_____ DATE_____

DEALER EMAIL_____PHONE #_____

DEALER: SELECT/WRITE IN APPLICABLE SERVICE CONTRACT NUMBER(S) FROM PRICE PAGES. WRITE IN SERVICE CONTRACT NUMBER(S), CONTRACT PARAMETERS, & MILEAGE/KM WHERE REQUIRED.
ORIGINAL - CUSTOMER COPY
PHOTOCOPY COMPLETED ENROLLMENT FORM & MAIL OR FAX TO SERVICE CONTRACTS.
A 5% FEE OVER RETAIL PRICE WILL BE CHARGED FOR WARRANTIES PURCHASED BETWEEN 6-12 MONTHS PAST WARRANTY START DATE.

BUS EXTENDED BODY COVERAGE

SERVICE CONTRACTS FOR COMMERCIAL AND SCHOOL BUS

The **Vehicle Service Coverage Option(s)** provides coverage to your vehicle for time or distance traveled from new vehicle delivery date, whichever expiration occurs first.

During the period selected, Navistar, Inc., will repair or replace any part of this vehicle covered component(s) which proves defective in material and/or workmanship in normal use, with new or ReNEWed parts. Exceptions are listed herein under *What is Not Covered*.

IC Bus, LLC Body-Related Components

Air Conditioner: A/C electrical control panel, accumulator/dryer, compressor clutch, compressor/rotary, condenser, fan condenser, air conditioner ducting, evaporator, A/C fitting/pipe, relay/magnetic switch, high side schrader valve, low side schrader valve, refrigerant pressure sensor, high pressure switch, low pressure switch, radiator fan/shutter override switch, thermostatic switch, inlet thermistor, outlet thermistor, drain tube, orifice tube, water valve (internal to the dash mounted A/C / heat unit), blower wheel

Body Frame: bows, front cowl, rear frame, entrance door header, drip rails, seat rails, bow spacers, steps, entrance door frame, driver's seat sub-frame (k or h frame), side emergency door frame, rear emergency door frame, lift door frame, body to cab floor frame, body to cab roof frame, davenport frame

Body-Inside: light bars, header bumpers, inside caps, insulation, lower lining, overhead lining, luggage racks, grab rails, shoulder rails, standee rails, noise reduction

Body-Outside: license plate bracket, outside caps, post caps, engine door, fuel door, windshield wiper door, engine service doors, front fiberglass panel, front sheet metal, grille, access handles, rear inside window panels, rub rails, snow rails, roof panels (topping), side sheets, rear outside skins, skirts, transition panel / cowl filler panel

Compartments: battery compartment, destination sign compartment, electrical access compartment, luggage compartment, safety compartment, spare tire compartment, tool compartment

Doors: buzzer boxes, air controls, electric controls, manual controls, hold back devices, emergency rear doors, emergency side doors, entrance doors, lift – single/double doors, door handles, hinges, door locks, vandalocks
Electrical: electrical panel, fuse panel, harness (wires, connectors, and terminals), body options external harness (engine), dash harness, flasher plate harness, flasher to cowl harness, front cap harness, front end harness, left hand body harness, LH switch panel harness, overhead switch panel harness, power distribution harness (on flasher plate), rear cap harness, RH switch panel harness, right hand body harness
Floor: floor panels, floor sills, tie down (bolts, plates, J-bolt, and U-Bolt), wheel-pocket assembly, wheel-pocket cover, cove moulding
Floor Covering: step treads
Frame *(glass not covered):* driver's window, kickout window, split sash window, split sash storm window
Heaters: control cable, core (heater), hose covers/trim, defroster duct, driver's heater, defroster fan, under seat heater, motors, booster heaters pump, rear heater, stepwell heater
Lifts: modesty panels, lap restraints, stanchions
Mirrors: cross view mirror
Safety Equipment: child check mate, destination signs, wig-wag
Seats: crash barrier frame, flip seat frame, passenger seat frame, courtesy shields
Vents: static vent
Windshield Wipers: drive motor, washer
Tail / License / Rear Stop / Rear Turn / Backup lights: mounting, lamp assembly, back-up alarm, relay/magnetic switch, back-up light switch, stoplight (air) switch, stoplight (hydraulic) switch, turn signal switch, switch pack actuator, switch pack (base), cab (wires connectors & terminals) harness, front end (wires connectors & terminals) harness, PDM distribution harness

OBTAINING SERVICE

To obtain service under this Service Contract, return this vehicle to any IC Bus Dealer authorized to service this model vehicle and engine. To locate your nearest authorized dealer, please call 1-800-44-TRUCK.

WHAT IS NOT COVERED

Components / Items:

- Correction of loose fasteners, squeaks, rattles and unusual noises.
- Adjustments (e.g., headlights, brake/clutch adjustments, steering system adjustments, coolant levels)
- Items warranted by their respective manufacturers (e.g., non–Navistar brand engines, tires & tubes, Allison Transmissions, batteries, radios, lubricants, etc)
- Any part that is not a Navistar part number
- Unauthorized parts other than Navistar service parts or ReNEWed® parts
- Bodies, equipment and accessories installed by other than authorized Navistar employees at Navistar manufacturing plants.
- Front and rear axle alignment
- Engine, Engine Electronics, Injectors, Turbocharger
- Hybrid Electric Components (except Hybrid/Electric Drive Cooling)

Repairs:

- Maintenance-related items/ repairs or those as a result of normal wear and tear, including tune-ups, windshield wiper blades, windshield wiper nozzles, gaskets, belts, seals, tire balancing, lubrication, batteries and other similar procedures/parts required to keep vehicle in good working condition. These services include, but are not limited to: oil changes, oil filters, air filters, fuel filters, desiccant cartridge, cleaning/polishing, engine tune-up, adding oils, tightening of air intake and coolant clamps, tire rotation ash tray, cigarette lighter element, fire extinguishers, fluorescent ballast and tubes, fuses, gladhand and gladhand rubbers, trailer hoses, hose tenders, trailer electrical cables, light bulbs, mattress, mud flaps, mud flap mounting bracket
- Repairs to any part of the vehicle subjected to misuse, negligence, improper maintenance, improper operation, or which is the result of an accident
- Fades, runs, mismatch or damage to paint, trim items, upholstery, chrome, polished surfaces, etc., resulting from environmental causes, improper polishes, cleaners or washing solutions, or chemical and industrial fallout
- No coverage will be granted if Power Train, Prop shaft and Suspension sales guidelines (specifications) are not strictly adhered to by all owners and operators of this vehicle
- Accidents, acts of nature or other events beyond control of Navistar.
- Any single repair requiring less than $40.00 parts and labor to complete
- Paint, rust, corrosion, cosmetic issues, bright work, glass

- Failure to maintain correct maintenance schedule
- Failures or damage resulting from abuse or neglect as determined by Navistar, which includes, but is not limited to: operation without adequate coolants or lubricants; over speeding; lack of maintenance of lubricating, cooling or intake systems; improper storage, starting, warm-up, run-in or shutdown practices

Other:

- Vehicles sold and/or operated outside the United States or Canada
- Vehicles/components which have had unauthorized alterations or modifications
- Vehicles on which the odometer reading has been altered
- Incidental, special, indirect or consequential costs or expenses which the owner may incur as a result of a malfunction or failure covered by this warranty, such as vehicle damage, communication expenses, meals, lodging, overtime, loss of use of engine or vehicle ("downtime"), loss of time, inconvenience, cargo loss or damage, and other similar costs and expenses
- Replacement of defective parts, which were, not authorized Navistar equipment when first installed
- Towing, unless additionally purchased

NOTE TO SERVICING LOCATION:

Should there be questions regarding this coverage, call the Warranty Claim Center for clarification. For this purpose, the following phone numbers are provided to be used weekdays during normal working hours in the 48 contiguous states, Hawaii and Canada, call 800-336-4500.

DISCLAIMER:

NO WARRANTIES ARE GIVEN BEYOND THOSE DESCRIBED HEREIN. THIS WARRANTY IS IN LIEU OF ALL OTHER WARRANTIES, EXPRESSED OR IMPLIED AND IS THE SOLE AND EXCLUSIVE WARRANTY MADE BY THE COMPANY HEREUNDER. THE COMPANY SPECIFICALLY DISCLAIMS ALL IMPLIED AND EXPRESS WARRANTIES, INCLUDING WARRANTIES OF MERCHANTABILITY AND FITNESS FOR A PARTICULAR PURPOSE, ALL OTHER REPRESENTATIONS TO THE USER/PURCHASER, AND ALL OTHER OBLIGATIONS OR LIABILITIES. THE COMPANY FURTHER EXCLUDES LIABILITY FOR INCIDENTAL, SPECIAL, INDIRECT, PUNITIVE AND CONSEQUENTIAL DAMAGES, ON THE PART OF THE COMPANY OR SELLER. No person is authorized to give any other warranties or to assume any liabilities on the company's behalf unless made or assumed in writing by the Company; and no other person is authorized to give any warranties or to assume any liabilities on the seller's behalf unless made or assumed in writing by the seller.

Remedies Under State or Provincial Law: Some States and Provinces do not allow the exclusion or limitation of incidental or consequential damages, so the above limitation or exclusion may not apply to the owner. This warranty gives the owner specific legal rights, and he may also have other legal rights which may vary by state or province.

Navistar, Inc., except in Canada where it is Navistar Canada, Inc.

AGENDA

NAVISTAR

OPTIONAL SERVICE CONTRACTS

CTS-2112

POLICY ISSUED BY: DEALER NAME		
CITY		DEALER ACCOUNT NUMBER
STATE/PROVINCE		POSTAL ZONE
YEAR	MODEL	VEHICLE APPLICATION
VEHICLE IDENTIFICATION NUMBER (FULL 17 DIGITS)		
ENGINE SERIAL NUMBER		
DATE OF DELIVERY TO USER (DTU)		ODOMETER READING AT DELIVERY
ABOVE INFORMATION MUST AGREE WITH DELIVERY TO USER (DTU) FORM AND DELIVERY INFORMATION ESTABLISHED BY RETAIL SALE		
CONTRACT HOLDER'S NAME		
STREET		
CITY		
STATE/PROVINCE		POSTAL ZONE

COVERAGE	SERVICE CONTRACT NUMBER	CONTRACT TERMS TIME MONTHS	CONTRACT TERMS DISTANCE - MI/KM (000)
VEHICLE SERVICE COVERAGE			

CUSTOMER: I HAVE REVIEWED THE OWNER / OPERATOR'S MANUAL FOR THIS VEHICLE AND READ THIS WARRANTY AGREEMENT AND:
(1) I UNDERSTAND THE OPERATION OF THIS VEHICLE, (2) I UNDERSTAND AND ACCEPT THE TERMS OF THIS WARRANTY AGREEMENT, AND (3) I ACKNOWLEDGE RECEIPT OF A COPY OF THIS WARRANTY AGREEMENT.

CUSTOMER SIGNATURE_____ DATE_____

DEALER: (1) YOU MUST REVIEW THE STANDARD WARRANTY AND THIS EXTENDED WARRANTY SERVICE POLICY ALONG WITH THE OWNER / OPERATOR'S MANUAL WITH THE CUSTOMER AT THE TIME OF SALE, (2) FOR U.S. AND CANADIAN SALES, SUBMIT A COPY OF THIS CONTRACT TO: **SERVICECONTRACTS@NAVISTAR.COM**
OR FAX TO : (630) 753-7061.

DEALER SIGNATURE_____ DATE_____

DEALER EMAIL_____PHONE #_____

DEALER: SELECT/WRITE IN APPLICABLE SERVICE CONTRACT NUMBER(S) FROM PRICE PAGES. WRITE IN SERVICE CONTRACT NUMBER(S), CONTRACT PARAMETERS, & MILEAGE/KM WHERE REQUIRED.
ORIGINAL - CUSTOMER COPY
PHOTOCOPY COMPLETED ENROLLMENT FORM & MAIL OR FAX TO SERVICE CONTRACTS.
A 5% FEE OVER RETAIL PRICE WILL BE CHARGED FOR WARRANTIES PURCHASED BETWEEN 6-12 MONTHS PAST WARRANTY START DATE.

BUS EXTENDED VEHICLE COVERAGE

(EXCLUDING BODY AND TRANSMISSION)

SERVICE CONTRACTS FOR COMMERCIAL AND SCHOOL BUS

The **Vehicle Service Coverage Option(s)** provides coverage to your vehicle for time or distance traveled from new vehicle delivery date, whichever expiration occurs first.

During the period selected, Navistar, Inc., will repair or replace any part of this vehicle covered component(s) which proves defective in material and/or workmanship in normal use, with new or ReNEWed parts. Exceptions are listed herein under *What is Not Covered*.

Frame and Bumper
Bumper System: Bumper
Frames: Cross member, engine cross member, frame side rail, reinforcement or gussets
Front Axle
Front Axle: Steering arm, front axle I-beam, king pin and bushings, steering knuckle
Suspension
Front Axle Suspension: torque arm & busing assembly, air bag assembly, control (air suspension only), shock absorber mounting bracket, center bolt, spring leaf assembly, spring bracket assembly, rear suspension cross member, sway bar assembly, axle stop
Single Rear Axle Air Suspension: torque arm & bushing assembly, air bag assembly, control (air suspension only), shock absorber mounting bracket, center bolt, spring leaf assembly, spring bracket assembly, rear suspension cross member, sway bar assembly, axle stop
Single Rear Axle Spring Suspension: torque arm & bushing assembly, shock absorber mounting bracket, center bolt, spring leaf assembly, spring bracket assembly, rear suspension cross member, sway bar assembly
Brakes
Hydraulic Brakes: master cylinder, reservoir, fluid level switch, parking brake lever/pedal, parking brake cable/linkage, wheel brake actuating linkage/cam/camshaft, brake linkage/pedal/spring, power assist unit, electronic ECU control unit, relay/magnetic switch, wheel sender, caliper, flow switch, monitor module, drive line brake assembly, cab harness, foot

control or pedal valve, hand control valve, front end harness (wires/connectors/term), PDM distribution harness

Hydraulic Full Power Brake: pumps, accumulators, hydraulic power brake (HPB) unit, solenoid valve, self actuate hydraulic release cylinder, master cylinder, reservoir, parking brake lever/pedal, brake linkage/pedal/spring, power assist unit, electronic (ECU) control unit, relay/magnetic switch, wheel sender, caliper, caliper bracket, flow switch, pressure differential switch, monitor module, spring brake control valve, drive line brake assembly, cab harness, foot control or pedal valve, hand control valve, front end harness (wires/connectors/term), PDM distribution harness, relay valve, wiring

Bus Air Brake System: Air or vacuum tank, knob, accumulators, solenoid valve, slack adjuster, automatic adjuster assembly, brake changer bracket, chamber, chamber diaphragm, air governor and mounting, wheel brake actuating linkage/cam/camshaft, brake linkage/pedal/spring, shield backing plate/anchor/dust, unloader valve air dryer end cover, steering angle sensor, stability control sender, electronic control unit (EDU), modulator valve, wheel sender, monitor module, spring brake control valve, cab harness, foot control or pedal valve, hand control valve, front wheel limiting & mounting valve, quick release valve, pulley, relay valve

Steering

Steering System: pitman arm, drag link, steering column assembly & mounting, tilt steering wheel mechanism, steering shaft couplings/u-joint, steering wheel, steering gear assembly, power steering pump mounting gasket, telescoping steering wheel mechanism, steering gear bracket/mounting, cylinder assembly & valves, oil cooler assembly, pump assembly, reservoir assembly, control valve, pulley

Prop Shaft

Transmission to Rear Axle: universal joint, slip joint boot/clamp, shaft, yoke/spline

Center Bearing Assembly: bearing, bearing mounting

Exhaust

Muffler: basic assembly, mounting bracket/support

Pipes: mounting bracket/support

Generating System

Electric Door Locks: driver and passenger door switch pod*, door lock actuator*, door harness*

Instruments Electrically Operated: multiplex signal module (MSM), voltmeter gauge, fuel level gauge, oil pressure gauge (electrical), coolant temperature gauge (electrical), ammeter gauge, engine oil temperature gauge, rear axle oil temperature gauge, speedometer gauge (electrical), transmission oil temperature gauge, fuel level sender, tachometer/trip recorder (electrically driven), pyrometer sender, rear axle oil temperature sender, transmission oil temperature sender, bezel/cover plate, circuit board, speedometer/tachometer dip switch (reprogramming only), ammeter module, speedometer/tachometer circuit housing, air pressure sender, hour meter, odometer, programming, cab (wires connectors & terminals) harness, PDM distribution harness

Remote Power Module: module (RPM)*, switch pack actuator*, switch pack (base)*, cab (wires connectors & terminals) harness*, PDM distribution harness*

Remote Engine Speed Control: remote engine speed control module*, PDM distribution harness*

Body Electrical System Controller Components: ESC controller, programming

Cranking System: key/ignition switch, cab (wires connectors & terminals) harness, PDM distribution harness

Battery Run Down Protection: clean power cable (battery to cab), clean power cable (batter to transmission)

Lighting Systems

Headlights: knob, mounting, lamp assembly, back-up alarm, daytime running light switch, relay/magnetic switch, dimmer switch, back-up light switch, interior light switch (panel mounted), stoplight switch (air), stoplight switch (hydraulic), headlight switch, turn signal switch, switch pack actuator, switch pack (base), cab (wires connectors & terminals) harness, front end (wires, connectors and terminals) harness, PDM distribution harness, interior light switch – door jam mounted*, interior light switch – lamp mounted*

Turn Signal/Hazard Switch and Flasher: mounting, lamp assembly, relay/magnetic switch, interior light switch (panel mounted), turn signal switch, switch pack actuator, switch pack (base), cab (wires, connectors & terminals) harness, front end harness (wires, connectors & terminals), PDM distribution harness

Instrument Panel Illumination Lamps: mounting, lamp assembly, relay/magnetic switch, dimmer switch, interior light switch (panel mounted), stoplight (air) switch, headlight switch, turn signal switch, switch pack actuator, switch pack (base), cab (wires connectors & terminals) harness, front end (wires connectors & terminals) harness, PDM distribution harness, , interior light switch – door jam mounted*, interior light switch – lamp mounted*, marker/interrupt switch*

Turn Lights (Front and Hood Side): mounting, lamp assembly, relay/magnetic switch, switch pack actuator, switch pack (base), cab (wires connectors & terminals) harness, front end (wires connectors & terminals) harness, PDM distribution harness
Interior Lights: headlight switch, switch pack actuator, switch pack (base), cab (wires, connectors & terminals) harness, lamp assembly*, , interior light switch – door jam mounted*, interior light switch – lamp mounted*, interior light switch – panel mounted*, PDM distribution harness*
Marker/Parking Lights: mounting, lamp assembly, headlight switch, turn signal switch, switch pack actuator, switch pack (base), cab (wires, connectors & terminals) harness, front end (wires, connectors & terminals) harness, PDM distribution harness
Fog/Driving Lights: mounting, lamp assembly, relay/magnetic switch, stoplight (hydraulic) switch, switch pack actuator, switch pack (base), cab (wires, connectors & terminals) harness, front end (wires, connectors & terminals) harness, PDM distribution harness
Warning Lights and Signals: coolant probe module, coolant level probe, lamp assembly, hydraulic brake warning beeper, high water temperature/low oil pressure alarm, low air pressure beeper, relay/magnetic switch, low oil pressure switch, high water temperature switch, low air pressure switch, low air pressure switch, low coolant level switch, parking brake switch, cab (wires, connectors & terminals) harness, PDM distribution harness
Horn (Electric): coiled ribbon harness (clock spring), mounting, horn assembly, horn contact ring/button, relay magnetic switch, cab (wires, connectors & terminals) harness, front end (wires, connectors & terminals) harness, PDM distribution harness
Window (Electric): regulator & motor assembly*, relay/magnetic switch*, cab (wires, connectors & terminals) harness*
Two Speed Axle/Power Divider Lock (electric): circuit board*
Steering Wheel Switches: cruise on/off switch, cruise set/rest switch
Miscellaneous (Electrical): electronic compass

Cooling:

Radiators: core, radiator tank & neck, shroud clamp, shroud mounting bracket, engine mounted shroud, radiator mounting, shroud, sight glass, surge tank & mounting, coolant recovery bottle and hose, in tank oil cooler
Shutters: shutter assembly, actuating cylinder assembly, control rod assembly, shutter stat, solenoid, relay/magnetic switch, temperature switch, cab (wires, connectors & terminals) harness, PDM distribution harness
Charge Air Cooler: charge air cooler pipe, chassis mounted charge air cooler
Hydraulically Driven Cooling Fan: solenoid valve, pump assembly, fan blade assembly, electronic fan controller, hydraulic fluid reservoir, oil cooler (oil-to-air)

Instruments

Oil Pressure Gauge: head assembly
Temperature gauge: head assembly
Air Pressure Gauge: head assembly
Air Restriction Gauge: head assembly

Engine

Basic Engine Components: fan blade assembly, viscous fan drive, on/off fan drive, fan clutch control, fan pulley, relay/magnetic switch, bolt front mount, bolt rear mount, coolant level switch, temperature switch, air compressor mounting bracket, cab (wires, connectors & terminals) harness, alternator mounting bracket, refrigerant compressor mounting bracket, chassis (wires, connectors & terminals) harness, power steering pump mounting bracket

Rear Axle

Driving Rear Axle: companion flange/yoke, carrier, axle housing, internal (axle carrier) bearings, differential bushings and cross gears, limited slip differential, ring gear bolt, helical gears, planetary gears, ring & pinion gears, helical drive gear shaft, sliding clutch, air shift control, air shift cylinder, shift fork, air shift motor, power divider bearing/retainer, oil pump, power divider differential case, power divider gears/bushing and cross

Fuel System

Air Inlet System: air inlet cap/scoop, air inlet water separator box, air inlet pipe, air inlet temperature control system, stack mounting bracket, air intake grill, air restriction indicator
Air Cleaner: mounting bracket & bolts
Diesel Fuel Tanks: filler neck/cap and gasket, chassis skirt, mounting bracket and bolts, tank body, fuel outlet tube, air vent, crash guard

Cab

Front End Sheet Metal: air intake baffle / water separation baffle
Front Fiberglass: hood stop, hood cable, grille assembly, hood handle, hood/engine access door hatch hinge, hood guides, hood, sound shield, engine compartment insulation, hood latch, air intake baffle / water separation baffle, splash panel, fastener/rivet, weld, hood trim, front hood mounting hinge/bracket, hood reinforcement, hood assist torsion bar, engine access door latch
Cab Platform Structure: cowl / firewall / SC or FC platform, instrument panel

Assemblies and Controls – Side Doors: glass run channel*, door*, hinge*, latch and exterior handle*, key lock*, passenger door map pocket*, rivet/fastener*, weld*, window regulator and handle*, door stop assembly*
Cab Mounting: cab mounting cross member*, cab front mounting*, sub-frame*
Cab Interior Appointments: grab handle*, headliner*, insulation*, floor carpeting/mat*, arm rest*, console*, manifest box/door pouch*, interior trim*, sun visor*, rear trim panel*, door trim panel – diver side*, door trim panel – passenger side*, cup holder*
Cab Exterior Appointments: head or tail lamp bezel, fender extension, cab step*, grab handle*, cowl tray*, exterior mirror (basic)*, electric mirror switch*, cab (wires, connectors & terminals) harness*, mirror motor*, mirror heater*, mirror bracket*

SCR After treatment

DEF Tank: fill level tank sensor, filler tank cap, tank heater, DEF tank bracket/strap, diesel exhaust fluid tank, tank pickup, heated line wiring, head unit wiring
DEF Pump: supply module cover, supply module pump, supply module pump bracket, ACM (after treatment control module), supply module wiring
After treatment Control Module: ACM (after treatment control module), ACM bracket, ACM wiring
DEF Lines/Hoses: pump to tank supply/suction hose, pump to tank return hose, pump to doser/injector hose
Coolant Lines/Hoses: tee to doser hose, doser to tee hose, coolant flow valve DEF tank
DEF Controls/Sensors: (sensor) wiring, PDM module

Accessories

Truck Air Conditioner and Heater: wiper linkage, horn assembly, compressor clutch*, compressor/reciprocation*, compressor/rotary*, condenser*, radiator fan/shutter override switch*, core (heater)*, evaporator*, engine meter assembly*, blower wheel*, wiper motor (air or vacuum)*, blower motor sleeper*, resistor block*, cranking motor drive assembly*, accumulator/dryer*, expansion valve*, rear expansion valve*, air conditioner / heater / defroster ducting*, control valve*, check valve*, tank assembly and mounting*, radio control (sleeper box)*, radio-basic assembly*, a/c o ring*, low side schrader valve*, high side schrader valve*, speaker*, seat shock*, seat assembly adjuster*, mounting bracket*, seat frame*, hose/pipe*, fitting*, air seat control*, mounting/housing (main case)*, air bag*, seat belt retractor*, seat belt*, engine heater assembly*, engine heater socket*, pump*, reservoir*, arm rest*, blower speed LPM module*, HVAC control module*, motor/door actuator – blend air*, motor/door actuator – fresh air*, motor/door actuator – air distribution*, refrigerant pressure sensor*, inlet thermistor*, outlet thermistor*, vehicle personality module (VPM)*, relay/magnetic switch*, orifice tube*, intermittent switch*, low fluid level switch*, clutch switch*, set-resume switch*, diagnostic module APADS*, low pressure switch*, high pressure switch*, thermostatic switch*, freeze sensor*, cab (wires, connectors & terminals) harness*, engine (wires, connectors & terminals) harness*, front end (wires, connectors & terminals) harness*
Truck Heater-Defroster: defroster fan*, compressor clutch*, reciprocating compressor*, condenser*, radiator fan/shutter override switch*, core (heater)*, evaporator*, blower wheel*, resistor block*, accumulator/dryer*, expansion valve*, air conditioner/heater/defroster ducting*, fitting*, mounting/housing (main case)*, blower speed module LPM*, HVAC control module*, motor/door actuator – blend air*, motor/door actuator – fresh air*, motor/door actuator – air distribution*, inlet thermistor*, outlet thermistor*, relay/magnetic switch*, low pressure switch*, high pressure switch*, thermostatic switch*, cab (wires, connectors & terminals) harness*
Air Horns: horn assembly, control valve, pneumatic solenoid, air horns switch, fitting, cab (wires, connectors & terminals) harness
Windshield Wiper System: wiper linkage*, mounting bracket*, fitting*, relay/magnetic switch*, switch*, intermittent switch*, cab (wires, connectors & terminals) harness*
Windshield Washer System: fitting*, pump*, reservoir*, switch*, low fluid level switch*, cab (wires, connectors & terminals) harness*, front end (wires, connectors & terminals) harness*
Cruise Control Electronic Engines: coiled ribbon (clock spring) harness, vehicle personality (VPM) module, switch, clutch switch, set-resume switch, cab (wires, connectors & terminals) harness
Individual Driver Seat: electric seat air compressor*, seat shock*, seat adjuster assembly*, seat frame*, fitting*, air seat control*, air bag*, seat belt retractor*, seat belt*, arm rest*
Front Seat Passenger: seat shock*, seat adjuster assembly*, seat frame*, fitting*, air seat control*, air bag*, seat belt retractor*, seat belt*, arm rest*
IC Bus, LLC Body-Related Components: horns

(*) Denotes Coverage Only for HC and TC Commercial Bus Chassis

OBTAINING SERVICE

To obtain service under this Service Contract, return this vehicle to any IC Bus Dealer authorized to service this model vehicle and engine. To locate your nearest authorized dealer, please call 1-800-44-TRUCK.

WHAT IS NOT COVERED:

Components / Items:

- Correction of loose fasteners, squeaks, rattles and unusual noises
- Adjustments (e.g., headlights, brake/clutch adjustments, steering system adjustments, coolant levels)
- Items warranted by their respective manufacturers (e.g., non–Navistar brand engines, tires & tubes, Allison Transmissions, Agility Fuel System, clutch, batteries, radios, lubricants, etc)
- Any part that is not a Navistar part number
- Unauthorized parts other than Navistar service parts or ReNEWed® parts
- Bodies, equipment and accessories installed by other than authorized Navistar employees at Navistar manufacturing plants
- Front and rear axle alignment
- Engine, Engine Electronics, Injectors, Turbocharger
- Hybrid Electric Components (except Hybrid/Electric Drive Cooling)

Repairs:

- Maintenance-related items/ repairs or those as a result of normal wear and tear, including tune-ups, brake/clutch lining, clutch brake, windshield wiper blades, windshield wiper nozzles, gaskets, belts, seals, tire balancing, lubrication, batteries and other similar procedures/parts required to keep vehicle in good working condition. These services include, but are not limited to: oil changes, oil filters, air filters, fuel filters, desiccant cartridge, cleaning/polishing, engine tune-up, adding oils, tightening of air intake and coolant clamps, tire rotation ash tray, cigarette lighter element, fire extinguishers, fluorescent ballast and tubes, fuses
- Repairs to any part of the vehicle subjected to misuse, negligence, improper maintenance, improper operation, or which is the result of an accident
- Fades, runs, mismatch or damage to paint, trim items, upholstery, chrome, polished surfaces, etc., resulting from environmental causes, improper polishes, cleaners or washing solutions, or chemical and industrial fallout
- No coverage will be granted if Power Train, Prop shaft and Suspension sales guidelines (specifications) are not strictly adhered to by all owners and operators of this vehicle
- Accidents, acts of nature or other events beyond control of Navistar
- Any single repair requiring less than $40.00 parts and labor to complete
- Paint, rust, corrosion, cosmetic issues, bright work
- Failure to maintain correct maintenance schedule
- Failures or damage resulting from abuse or neglect as determined by Navistar, which includes, but is not limited to: operation without adequate coolants or lubricants; over speeding; lack of maintenance of lubricating, cooling or intake systems; improper storage, starting, warm-up, run-in or shutdown practices

Other:

- Vehicles sold and/or operated outside the United States or Canada
- Vehicles/components which have had unauthorized alterations or modifications
- Vehicles on which the odometer reading has been altered
- Incidental, special, indirect or consequential costs or expenses which the owner may incur as a result of a malfunction or failure covered by this warranty, such as vehicle damage, communication expenses, meals, lodging, overtime, loss of use of engine or vehicle (“downtime”), loss of time, inconvenience, cargo loss or damage, and other similar costs and expenses
- Replacement of defective parts, which were, not authorized Navistar equipment when first installed
- Towing, unless additionally purchased

Components EXCLUDED but not limited to if unit has a NON-Navistar Brand Engine

Accessory Drive Systems:

- Fuel pump drive cam, accessory drive coupling, power steering pump driver gear, pulley/idler/bearing, belt tensioner

Air Cleaner:

- Air cleaner snow valve motor, air cleaner snow valve switch

NOTE TO SERVICING LOCATION:
Should there be questions regarding this coverage, call the Warranty Claim Center for clarification. For this purpose, the following phone numbers are provided to be used weekdays during normal working hours in the 48 contiguous states, Hawaii and Canada, call 800-336-4500.

DISCLAIMER:
NO WARRANTIES ARE GIVEN BEYOND THOSE DESCRIBED HEREIN. THIS WARRANTY IS IN LIEU OF ALL OTHER WARRANTIES, EXPRESSED OR IMPLIED AND IS THE SOLE AND EXCLUSIVE WARRANTY MADE BY THE COMPANY HEREUNDER. THE COMPANY SPECIFICALLY DISCLAIMS ALL IMPLIED AND EXPRESS WARRANTIES, INCLUDING WARRANTIES OF MERCHANTABILITY AND FITNESS FOR A PARTICULAR PURPOSE, ALL OTHER REPRESENTATIONS TO THE USER/PURCHASER, AND ALL OTHER OBLIGATIONS OR LIABILITIES. THE COMPANY FURTHER EXCLUDES LIABILITY FOR INCIDENTAL, SPECIAL, INDIRECT, PUNITIVE AND CONSEQUENTIAL DAMAGES, ON THE PART OF THE COMPANY OR SELLER. No person is authorized to give any other warranties or to assume any liabilities on the company's behalf unless made or assumed in writing by the Company; and no other person is authorized to give any warranties or to assume any liabilities on the seller's behalf unless made or assumed in writing by the seller.
Remedies Under State or Provincial Law: Some States and Provinces do not allow the exclusion or limitation of incidental or consequential damages, so the above limitation or exclusion may not apply to the owner. This warranty gives the owner specific legal rights, and he may also have other legal rights which may vary by state or province.
Navistar, Inc., except in Canada where it is Navistar Canada, Inc.

OBTAINING SERVICE

Return this vehicle to any IC Bus Dealer authorized to service this model vehicle and engine.

DISCLAIMER

NO WARRANTIES ARE GIVEN BEYOND THOSE DESCRIBED HEREIN. THIS WARRANTY IS IN LIEU OF ALL OTHER WARRANTIES, EXPRESSED OR IMPLIED. THE COMPANY SPECIFICALLY DISCLAIMS WARRANTIES OF MERCHANTABILITY AND FITNESS FOR A PARTICULAR PURPOSE, ALL OTHER REPRESENTATIONS TO THE USER/PURCHASER, AND ALL OTHER OBLIGATIONS OR LIABILITIES. THE COMPANY FURTHER EXCLUDES LIABILITY FOR INCIDENTAL AND CONSEQUENTIAL DAMAGES, ON THE PART OF THE COMPANY OR SELLER. No person is authorized to give any other warranties or to assume any liabilities on the Company's behalf unless made or assumed in writing by the Company; and no other person is authorized to give any warranties or to assume any liabilities on the seller's behalf unless made or assumed In writing by the seller.

Remedies Under State or Provincial Law: Any suit for breach of this Limited Warranty must be initiated within one year after breach. Some States and Provinces do not allow the exclusion or limitation of incidental or consequential damages, so the above limitation or exclusion may not apply to the owner. This warranty gives the owner specific legal rights, and he may also have other legal rights which may vary by state or province.

RECORD OF OWNERSHIP

Upon receipt of new vehicle by original owner, complete the following:
I have read this Warranty Brochure and fully understand the warranty coverage, and the limitations and exclusions. I acknowledge that I have received a copy of the Owner's Limited Warranty and I accept the terms described herein.

Customer Signature	Date
Owner's Address	City State/Prov Postal Code
Bus Model	Vehicle Identification Number
Engine Number	Engine Serial Number
Date Delivered to User (DTU)	Odometer Reading at Delivery

IMPORTANT: The information contained in this Warranty Policy explains the coverage provided on your new IC Bus™ brand vehicle. This policy should be kept in the vehicle for presentation to the Dealer when you request warranty services.
Any provisions of this Limited Warranty that are prohibited or not enforceable in any jurisdiction shall be, as to such jurisdiction, ineffective to the extent of such prohibition or non-enforceability without invalidating the remaining provisions hereof, and any such prohibition or non-enforceability in any jurisdiction shall not invalidate or render non-enforceable any such provisions in any other jurisdiction.
All claims under this Limited Warranty must be submitted in writing to an authorized IC Bus dealer within the warranty period as stated herein. If you have questions regarding this Limited Warranty, contact IC Bus, LLC dealer. To locate nearest dealer, visit the IC Bus website **www.ICBus.com**.

EFFECTIVE WITH VEHICLES BUILT JANUARY 02, 2015 OR LATER

LIMITED WARRANTY FOR SCHOOL BUS MODELS

CE Series (PB105), RE Series (PB305), BE Series (PB405)

IC Bus, LLC warrants to the original purchaser (the "Purchaser") that IC Bus, LLC brand buses and component parts thereof are, at the time of purchase, free from defects in material and workmanship and will remain free from such defects under normal use after delivery to the Purchaser as provided herein. Warranty shall begin at the time of delivery unless otherwise approved by IC Bus, LLC. The delivery limitations as set forth herein shall run from the date of delivery to the Purchaser in the United States of America and Canada. The remedy available under this Limited Warranty is non-cumulative in nature and is limited to repair or replacement at IC Bus, LLC option of the bus or component parts thereof that are returned to locations approved by IC Bus, LLC transportation charges prepaid, and which IC Bus, LLC examination disclosed to its satisfaction to be defective. IC Bus, LLC, at its option, will repair or replace any part of this vehicle which proves defective in material and/or workmanship in normal use and service, with new or ReNEWed parts. Exceptions are listed below under *What Is Not Covered*.

This warranty is automatically transferred to subsequent owners at no charge. Visit your local IC Bus Dealer for name and address change information.

COMPONENT COVERAGE

The components described below are given additional warranty coverage of variable time periods and distance traveled limitations, as shown in the *Warranty Coverage Schedule.*

1. Frame Rails and Crossmembers
2. Body/Cowl Structure
   - Body Structure defined as the steel body frame (which includes the roof, metal floor, sides and front and rear sections only).
   - As to items not considered Body Structure include but are not limited to the following: doors, corner moldings, inner ABS panels, interior wall, plywood, floor covering, windows, and trim moldings.
3. The Body/Cowl is warranted against perforation due to corrosion, except for perforation caused by industrial chemicals and/or corrosion caused by use in a corrosive industrial environment.
4. Navistar Diesel Engine Coverage Includes: Navistar Diesel Engine block, cylinder heads, internally lubricated components fuel pump, high pressure pump, turbocharger, water pump, air compressor, injectors/nozzles; electronic engine modules, engine relays, engine sensors and regulators required for electronic engine operation, and certain aftertreatment components. Excluding: attaching accessories (e.g., fan clutch, alternator, starter, etc.), and externally mounted electrical and filtration systems.
5. Spicer front & rear axles and propeller shaft, when used with Allison transmission; excluding brakes, wheel ends axle shafts, controls & attachments.

THE PROVISIONS HEREOF CONSTITUTE THE EXCLUSIVE AND COMPLETE WARRANTY BY IC BUS, LLC ON IC BUS™ BRAND BUSES AND COMPONENT PARTS THEREOF MANUFACTURED BY IT, OR APPROVED BUS BODY CONTRACT MANUFACTURERS AND IS IN LIEU OF ALL OTHER OBLIGATIONS OR LIABILITIES OF IC BUS, LLC WHETHER EXPRESS OR IMPLIED.

Note: The customer has 365 days and up to a maximum of 100,000 miles (160,000 km) from DTU (delivery to end user) to purchase an extended warranty on the unit. For extended warranty purchases between 181 and 365 days from DTU and <100,000 miles (160,000 km) an additional fee will be assessed. See your local IC Bus dealer for details.

Items Covered	Months	Miles/Km (000)
BASIC VEHICLE COVERAGE		
Basic Vehicle Warranty	12	Unlimited
Towing (Vehicles with engine failures only)	24	Unlimited
COMPONENTS		
Frame Rails and Crossmembers	60	Unlimited
Body/Cowl Structure (Roof, Metal Floor, Sides and Front and Rear Sections)	60	Unlimited
Body/Cowl Perforation Corrosion	60	Unlimited
Bumper Corrosion and Paint Delamination	36	Unlimited
Body/Cowl/Hood Paint Delamination	60	Unlimited
Brightwork, Chassis Paint and Corrosion	6	Unlimited
IC Bus, LLC Factory Installed Air-Conditioning (IC Air)	30	Unlimited
SEATS*IC Bus manufactured Seats Only**		
Foam	48	50/80
Upholstery	24	24/40
Frame and Barriers	60	Unlimited
ENGINE*		
MaxxForce® 7 Engine	60	100/160
MaxxForce® DT Engine Standard Torque	60	100/160
MaxxForce® DT Engine High Torque	60	100/160
DRIVETRAIN**		
Spicer - 3 Part Dana Drivetrain (Front & Rear Axles, Propeller Shaft, When Used With Allison Transmission Only)	48	50/80
Meritor Axles	48	75/120

***Emission Coverage: R**efer to engine operator's manual for emission coverage.
****Drivetrain:**

- Allison Transmissions products or Transynd lubricants and fluids are not covered under this warranty. For warranty information see: www.allisontransmission.com/publications/
- For specific Eaton/Fuller Warranty coverage, see supplier information: www.roadrangerwarranty.com
- For extended component warranty: www.roadranger.com/Roadranger/warranty/Extended Warranty/index.htm

*****For non IC Bus Manufactured seats**, contact the seat supplier for their warranty coverage.
For **Enova** charge sustaining and charge depleting standard warranty to:
http:enovasystems.com/customer-support.html

WHAT IS NOT COVERED

AFTER THE FIRST 90 DAYS FROM DELIVERY TO USER (DTU):

- Correction of loose fasteners, squeaks, rattles and unusual noises.
- Towing (vehicles with non-engine failures only)
- Adjustments (e.g., headlights, brake/clutch adjustments, steering system adjustments, coolant levels, doors).

COMPONENTS / ITEMS:

- Warranted by their respective manufacturers (e.g., non Navistar brand engines, tires & tubes, Allison Transmissions, Hybrid electric, lubricants, etc.)
- Bodies, equipment and accessories installed by other than authorized IC Bus employees at IC Bus manufacturing plants.
- Front and rear axle alignment.
- Front & Rear axle coverage excludes brakes, wheel ends, axle shafts, controls & attachments.

REPAIRS:

- Maintenance-related items/repairs or those as a result of normal wear and tear, including tune-ups, brake/clutch lining, windshield wiper blades, tire balancing, lubrication and other similar procedures/parts required to keep vehicle in good working condition.
- To any part of the vehicle subjected to misuse, negligence, improper maintenance, improper operation, or which is the result of an accident.
- Fade, runs, mismatch or damage to paint, trim items, upholstery, chrome, polished surfaces, etc., resulting from environmental causes, improper polishes, cleaners or washing solutions, or chemical and industrial fallout.
- In which power train, propeller shaft and suspension sales guidelines (specifications) are not strictly adhered to by all owners and operators of this vehicle.

OTHER:

- Vehicles sold and/or operated outside the United States and Canada.
- Vehicles/components that have had unauthorized alterations or modifications.
- Vehicles on which the odometer reading has been altered.
- Loss of time or use of the vehicle, loss of profits, inconvenience, or other consequential or incidental damages or expenses.
- Replacement of defective parts with parts other than those provided by IC Bus, LLC.

This warranty does not apply, or include coverage for defects attributable to the following:

(a) Damage resulting from: (i) misuse, abuse, accident, neglect, negligence, vandalism, fire, riot, war, or Acts of God;
(b) (ii) Structural or other modifications or alteration without prior express written authorization by IC Bus, LLC; (iii) Repair or attempted repair by unauthorized persons; (iv) Replacement of original components with substitutes without prior express written authorization by IC Bus, LLC; (v) Failure to perform routine preventative maintenance as customarily accepted within the industry or failure to provide proof of such preventative maintenance having been performed; (vi) Exposure to corrosives, contaminants, chemicals, salt, irradiation or atmospheric or environmental conditions; (vii) Usage or loading in excess of recommended capacities or in non-standard applications, including off-road.
(c) Fading or discoloration of paint, lettering or decals.
(d) Effects of aftermarket installation and aftermarket parts installed by the dealer or customer.

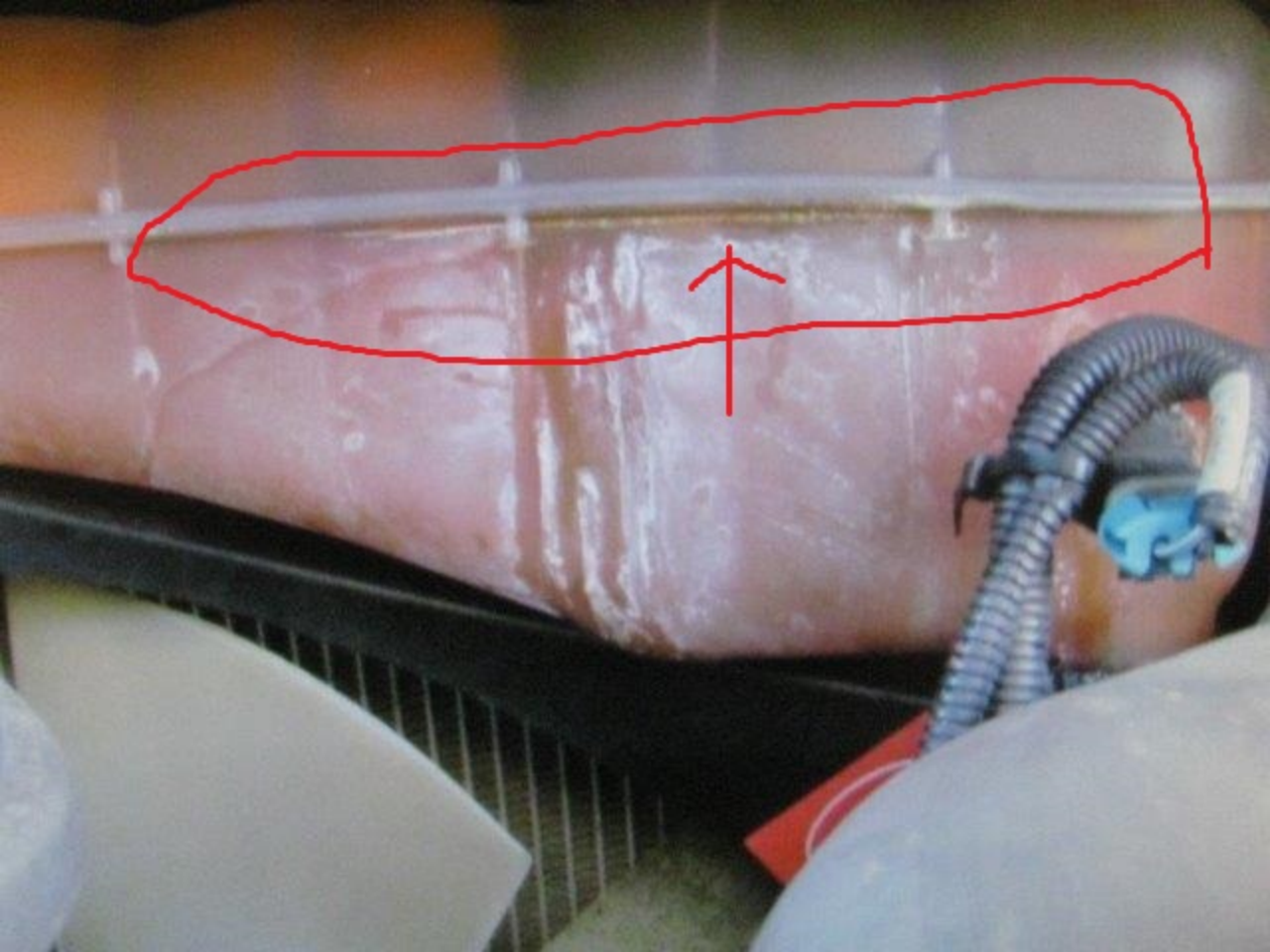

AGENDA

Inspector Instructor Update 2015

Slack Adjuster Basics

Purpose & Scope

- The purpose of this seminar is to provide the inspector and technician with guidelines for maintenance and operation of manual and automatic slack adjusters on Kentucky school buses. Many of the procedures are an extension of the definition of the manufacture's service manuals. There is no intent to deviate from the recommend manufacture's practices and procedures, but rather to highlight and expand those procedures.
- Always utilize the maintenance and safety procedures described in the manufacture's manuals. Any time there is conflict with this seminar and the manufacture's manuals, the manufacture's manual shall prevail.

AGENDA

OUR GOAL

- To provide Kentucky school districts with the safest and most efficient transportation available.

AGENDA

Today's Topics

- Manual Slack Adjusters
- Automatic Slack Adjusters
  - Bendix ASA-5
  - Haldex AA-1
  - Haldex S-ABA
- Haldex S-ABA Issues
- Question & Answer

What Are Slack Adjusters?

- The slack adjuster is the link between a brake chamber or actuator and the S-Cam brake camshaft. Its arm is fastened to the push rod with a yoke and its spline installed on the foundation brake cam shaft. It transforms and multiplies the force developed by the chamber into torque which applies the brakes via the camshaft.

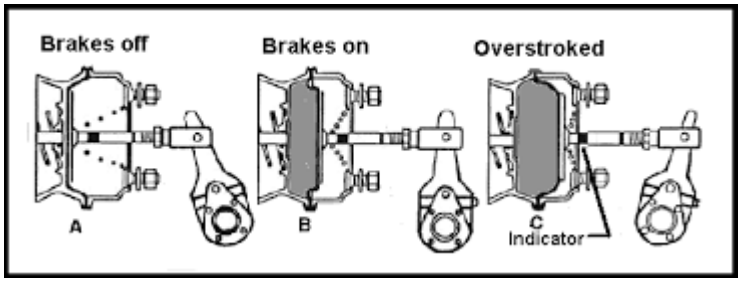

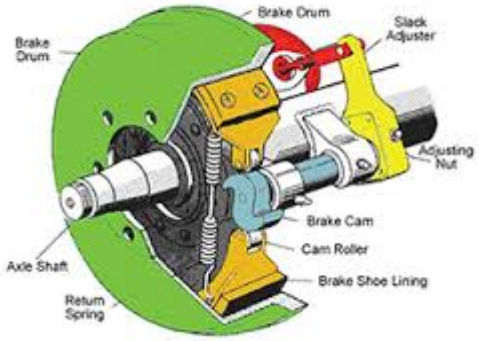

Slack Adjuster Terms

- At Rest: When service brakes or park brake are not applied & system pressure is at 90-100 psi.
- Free Stroke: The amount of movement of the adjuster arm required to move the brake shoes against the drum. If free stoke is good, but applied stroke is too long there is probably a problem with the foundation brakes.
- Applied Stroke: Measurement made from the face of the brake chamber to the center of the slack clevis pin, at 90-100 psi. with park brake released.
- Maximum Stroke: Farthest distance at which brake chamber rod can travel before brakes need adjusted.
- AL Factor: A measurement of leverage which is obtained by multiplying the area of the brake chamber by the effective length of the slack adjuster.

Types Of Slack Adjusters

MANUAL

- To maintain proper lining to drum clearance this adjuster must be physically adjusted. Adjust at each inspection Or 1,000 Miles.

AUTOMATIC

- Automatically adjusts for brake lining wear. No periodic physical adjustment required. Check brake stroke at PM's.

AGENDA

Brake Performance Check
(On lot Or Road Test)

1) Low Pedal
2) Vibrating Pedal
3) Spongy Or Springy Pedal
4) Hard Pedal
5) Drag
6) Fade
7) Pull
8) Grab
9) Squeal or Abnormal noise
10) Lock
11) Sluggish Response

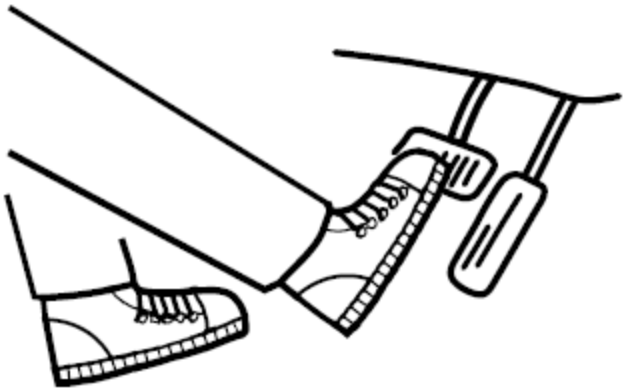

Brake Performance Check

- ✓ Ensure slack clevis pins move freely & lube if needed.
- ✓ Correct slack clevis pin(s) (size & length). Bushing in slack not worn or missing.
- ✓ Correct slack length (5 ½‘’) (Multi-hole slack application.)
- ✓ Ensure brake chamber rod is not to far through clevis.
- ✓ Check all slack adjuster hardware for looseness, missing parts, incorrect parts or damage. (Snap rings, s-cam washers, cotter pins, clevis, clevis pins, mounting hardware)
- ✓ Roll wheel forward & backward it must roll freely. (There may be a broken return spring or fallen out brake roller.)
- ✓ Check free stroke.
- ✓ Adjust front & rear brakes. (Manual slacks only)
- ✓ Check front & rear brake adjustment. (Auto slacks only)

Manual Slack Adjusters

- To compensate for the gradual wear on the brake lining, manual slack adjusters are equipped with an adjusting mechanism, which provides a means of adjusting for brake lining wear.
- The most efficient braking action is obtained when the slack adjuster arm travel is approximately 90 degrees and in the recommended range of the chamber.
- The last half of an air chamber stroke is less efficient than the first half. It is important that brake adjustments are made as often as necessary.

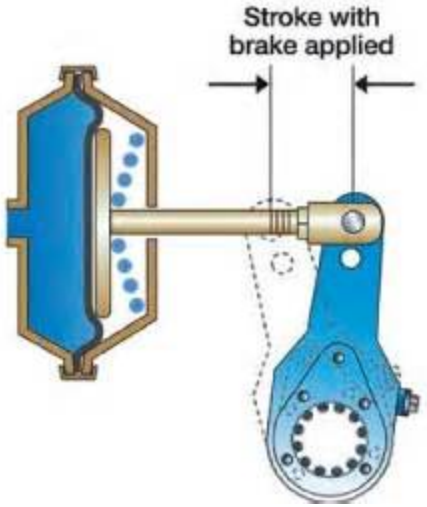

AGENDA

Manual Slack Adjuster Testing

- Check free stroke with brakes released and brake pressure at 90 psi. Free stoke should be approximately 1/2”to 5/8” in. If free stroke greater than desired length adjust brakes or a foundation brake problem may exist.
- Slack adjuster should move freely without binding or dragging.
- Inspect slack adjuster hardware for being missing, damaged, worn or incorrect.
  - Clevis pins move freely, slack clevis, clevis pin bushings, cotter pins.
  - S-cam snap rings, s-cam washers, Broken grease zerk.
  - Adjusting hex lock

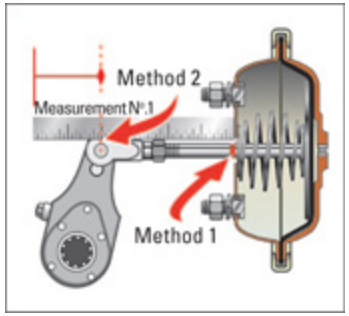

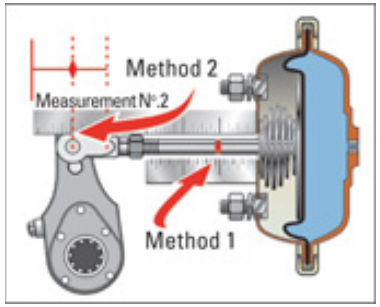

Manual Slack Adjuster Adjustment Procedure

1) Raise and support vehicle. Release park brake.
2) Insure air pressure is a minimum 90-100 psi.
3) Push in adjusting hex lock, rotate adjusting hex until brake linings contact drum.
4) Reverse adjusting hex approximately ¼ turn. Rotate wheel to insure little or no drag is present. Be sure adjusting hex lock return to lock position.
5) Brake stroke should be as short as possible without brakes dragging.
6) Test drive & check brake performance. (Outlined earlier)

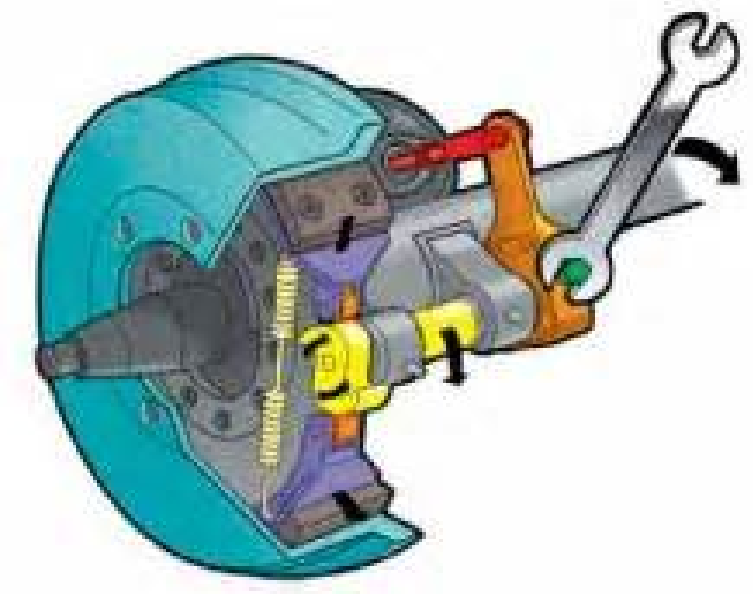

AGENDA

Manual Slack Adjusters Notes

- Have been installed on Kentucky school buses for several years. Manual slack adjusters ended in 1990.
- Adjust manual slack adjusters each inspection or 1,000 miles.
- Can upgrade to an automatic slack adjuster if desired. Upgrade both axles. Verify correct application.

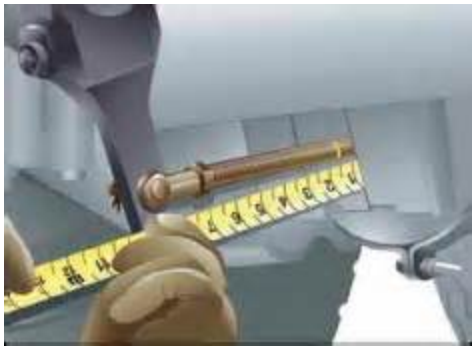

Automatic Slack Adjusters

Overview

- Automatic slack adjusters perform the same function as the standard unit, except that it automatically adjusts for lining wear.
- The automatic slack adjuster **DOES NOT** require periodic manual adjustment, but does provide for manual adjustment.

3 Automatic Slack Models

- Bendix ASA-5
- Haldex AA-1
- Haldex S-ABA

AGENDA

Bendix ASA-5 Overview

- Bendix ASA-5 Installed on school Kentucky school buses from 1991-99.
- If small clevis pin is missing in link rod or link rod is broken or damaged adjustment will not hold.
- A brake chamber rod to long could hit slack.
- When replacing slack adjuster replace clevis.
- Brake stoke is rated by chamber size, not slack type or length.
- Test slack adjusters on all brake jobs.
- Never use air tools on adjusting hex.
- DO NOT periodically adjust Automatic Slacks if past recommended stroke, test slack, or you have a foundation brake issue.
- Can upgrade to Haldex AA-1 Or S-ABA slack adjuster if desired. Upgrade both axles. Verify correct application.

Bendix ASA-5
Torque Testing

1) Raise and support vehicle. Release park brake.
2) Insure air pressure is a minimum 90-100 psi.
3) Set a torque wrench to 15 ft. lbs.
4) Attach torque wrench to the hex extension. Rotate clockwise. If the hex did not rotate OR there is less than 15 ft. lbs. the adjuster must be replaced.
5) If the hex rotates clockwise and has a counterclockwise torque greater than 15 ft. lbs. the adjuster is operating normally.

Bendix ASA-5 Ratchet Testing

1) Back off hex extension ½-1 turn counterclockwise.
2) Have assistant apply brakes several times and watch the hex to rotate clockwise. Or mark hex & adjuster housing, apply brakes several times, be sure marks do not line up.
3) Replace slack if torque test fails.
4) Re-adjust brakes when testing complete.

Haldex AA-1
Overview

- Installed on Kentucky schools buses from 2000-11.
- Require anchor brackets & hardware for installation.
- Correct hardware installation & slack set-up critical for proper slack adjuster operation.
- Different front & rear hardware configurations.
- Offset, angled, & straight-armed configurations.
- **DOES NOT** require periodic manual adjustment. **CHECK** brake adjustment at inspections.
- Never use air tools on adjustment hex.
- Can upgrade to Haldex S-ABA slack adjuster if desired. Upgrade both axles. Verify correct application.
- Test slack adjusters on all brake jobs.
- Refer to Haldex AA-1 service manual for installation & set up.

AGENDA

Haldex AA-1
Visual & Operational Checks

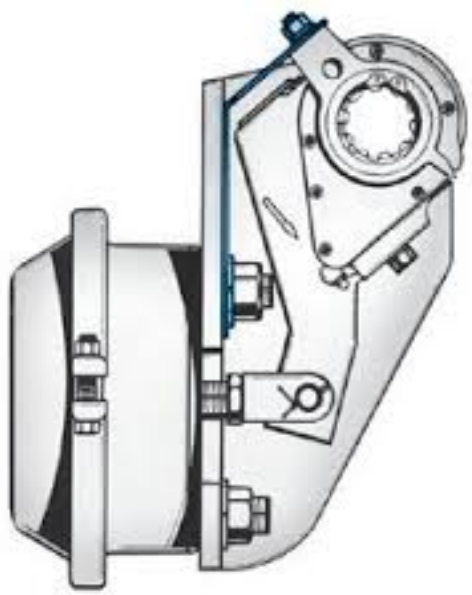

- Inspect brackets & control arms for looseness, damage or missing parts.
- Verify control arm does not move freely. (Off Vehicle Inspection)
- Verify Installation Indicator pointer is in Indicator notch.
  - With brakes released & air at 90-100 psi.
- Clevis pin should move freely & cotter pin installed.
- Chamber rod length through clevis (could hit slack).
- Slack adjuster should move freely without binding or dragging.
- Measure free stroke between 3/8”-3/4”. At 90-100 psi. with park brake released.

AGENDA

Haldex AA-1
Testing

1. Ensure brake psi. is at 90-100psi.
2. Check that push rod is fully retracted.
3. Manually de-adjust brakes one full turn, a ratcheting sound should occur & torque should be no less than 13 ft. lbs. Replace adjuster if one or both of these tests fail.
4. Make one full service brake application.
5. During brake release observe rotation of adjustment hex.
6. If rotation is not observed troubleshoot slack set-up, hardware & foundation brakes.
7. Verify control arm does not move freely. (Off Vehicle Inspection)
8. Manually re-adjust brakes after testing. Tighten hex until shoes contact drum, back off 1/2 turn.

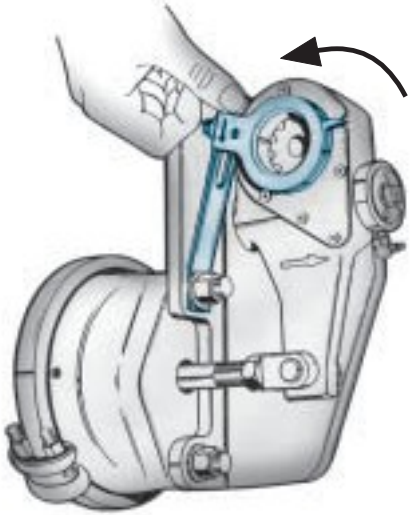

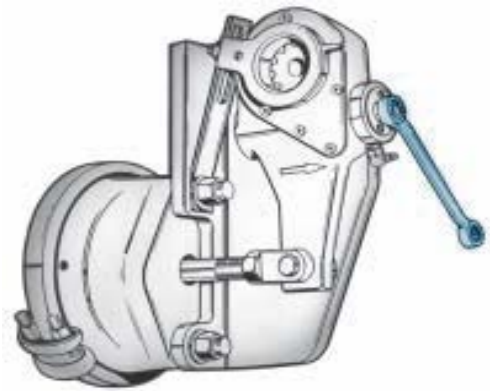

Pointer in window
(Brakes released)

Pointer not in window
(Brakes applied)

AGENDA

Haldex S-ABA (Self- Setting Automatic Brake Adjuster)

- Installed on Kentucky schools buses from 2011-current.
- Require anchor brackets & hardware for installation.
- Establishes its own reference point by setting control arm in any position.
- **DOES NOT** require periodic manual adjustment. Check brake adjustment at inspections.
- A replacement slack may appear physically different, but will fit your application.
- Refer to Haldex service manual for installation & set up

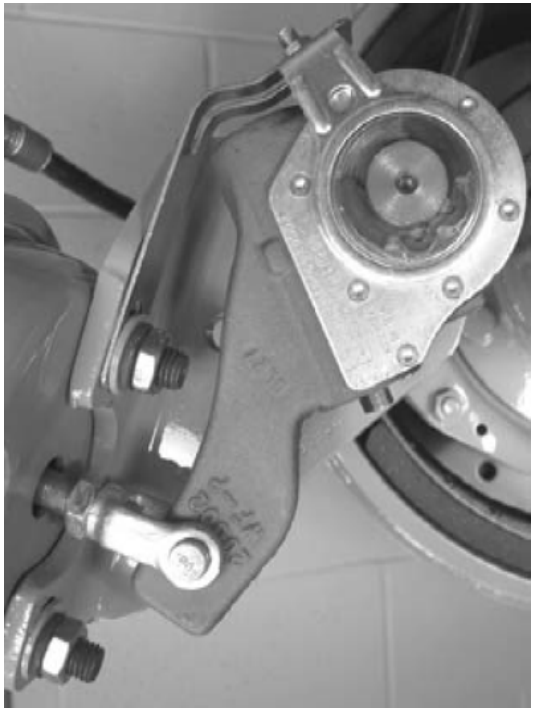

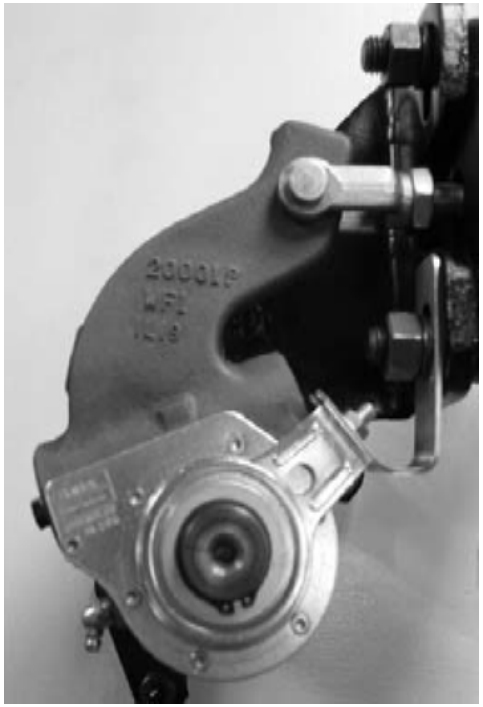

Haldex S-ABA
Testing

1. Ensure brake psi. is at 90-100psi.
2. Check that push rod is fully retracted.
3. Manually de-adjust brakes one full turn, a ratcheting sound should occur & torque should be no less than 13 ft. lbs. Replace adjuster if one or both of these tests fail.
4. Make one full service brake application.
5. During brake release observe rotation of adjustment hex.
6. If rotation is not observed troubleshoot slack set-up, hardware & foundation brakes.
7. Manually re-adjust brakes after testing. Tighten hex until shoes contact drum, back off 1/2 turn.
8. Test slack adjusters on all brake jobs.

AGENDA

Haldex S-ABA Issues

- The retainer around the adjustment hex is unscrewing itself causing the brake adjustment not to hold.
- The brake chamber will eventually continue to maximum stroke and bottom out. Therefore resulting in no brakes on that wheel or wheels effected.
- A majority of the failed slack adjusters are on the rear, but a small percentage are on the front.

AGENDA

Haldex S-ABA Issues

- Models effected 2011-13 Thomas/ Freightliner C2 52-66 Passenger buses.
- No reports have been made that IC or Bluebird buses have this issue.
- No formal recalls or bulletins have been put out by Haldex.
- No mileage range on when this slack adjuster may fail.
- A possible toque & securing process of the hex retainer has changed from being pinned to a thread locking compound.

AGENDA

Haldex S-ABA Video

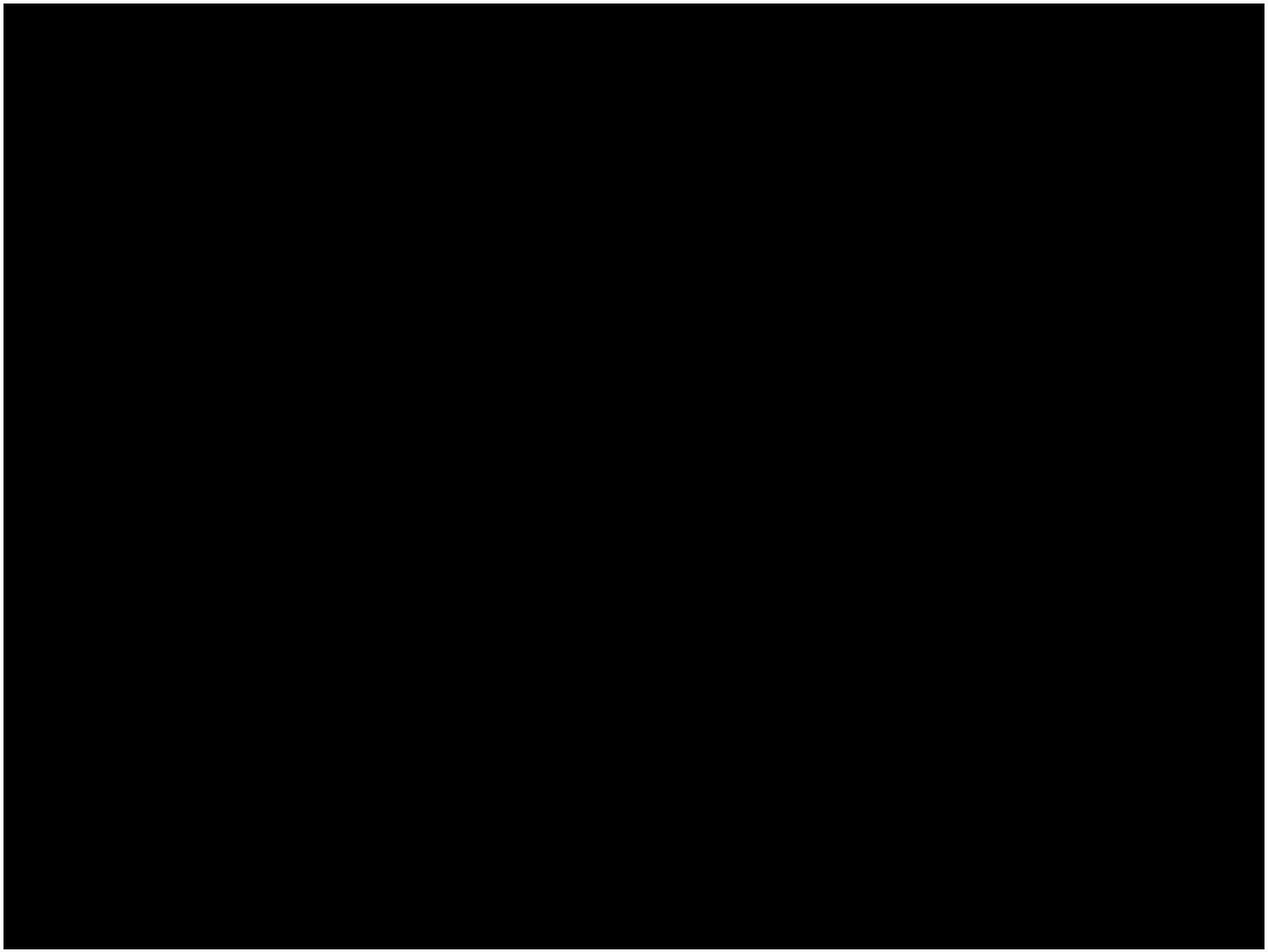

AGENDA

What do I do if I have a failed Haldex S-ABA?

1) Take a picture of the bus # and effected slack or slack adjusters.
2) Record the mileage & VIN number of the bus.
3) Note weather the slack is the front or rear and left or right.
4) Contact your Thomas/ Freightliner dealer make them aware of the situation. Also contact Dave Mangum & pass along your info.

NOTE:

- Jefferson County has sent out 80 slack adjusters to Haldex for testing. Results still pending.
- A Meritor ASA will be a option for Thomas/ Freightliner for the 2016 build.

References

www.Bendix.com

www.Haldex.com

www.thomasbus.com

www.ICbus.com

www.blue-bird.com

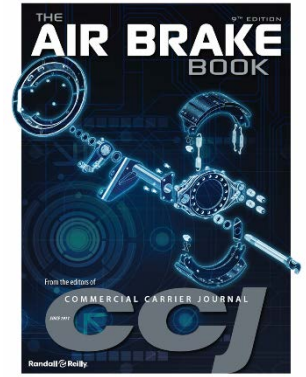

www.ccjdigital.com

Question & Answer

Bendix

Service Data

Bendix Manual Slack Adjusters

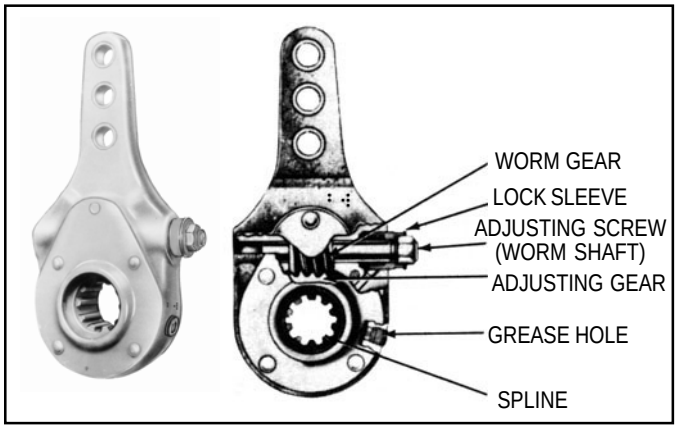

FIGURE 1 - POSITIVE LOCK TYPE SLACK ADJUSTER

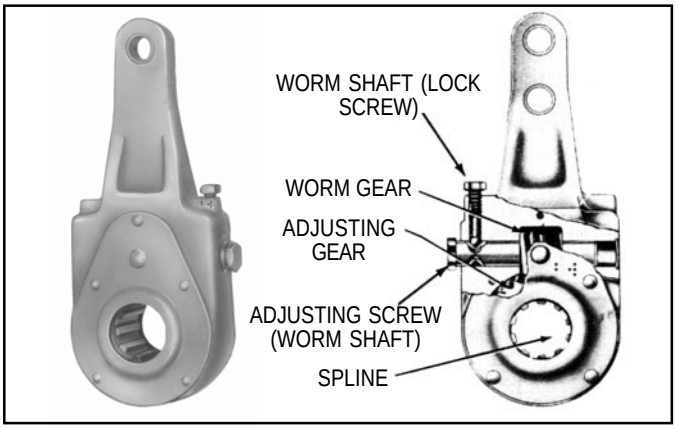

FIGURE 2 - BALL INDENT TYPE SLACK ADJUSTER

DESCRIPTION

In an s-cam type foundation brake, the final link between the pneumatic system and the foundation brake is the slack adjuster. The arm of the slack adjuster is fastened to the push rod of the chamber with a yoke, and the slack adjuster spline is installed on the brake cam shaft.

Primarily, the slack adjuster is a lever, converting the linear force of the air chamber push rod into a torque which turns the brake cam shaft and applies the brakes.

Standard slack adjusters contain four basic components; the body, worm, gear and adjusting screw. The adjusting screw is provided to adjust the slack caused by the wear of the brake lining.

All slack adjusters utilize the worm and gear principle and, fundamentally, differ only in torque limit specifications; A type 20 slack adjuster has a limit of 20,000 inch pounds torque, a type 30 slack adjuster has a limit of 30,000 inch pounds torque, etc.

Slack adjusters are manufactured with various arm lengths and various configurations; straight, offset, etc. to satisfy various installation requirements. Splines are available in several different types and sizes.

OPERATION

When the brakes are applied, air pressure forces the air chamber diaphragm and push rod to move; this rotates the slack adjuster, which in turn rotates the cam shaft. This causes the “S” cam to spread the brake shoes which contact the brake drum.

When the brakes are released, air pressure is exhausted from the air chamber. The chamber return spring and the brake shoe return springs return the brake cam, cam shaft, slack adjuster and chamber push rod to the released position.

ADJUSTING MECHANISM

The adjusting mechanism of a slack adjuster consists of an adjusting screw (worm shaft), worm and slack adjuster worm gear. Turning the adjusting screw nut on the end of the worm shaft rotates the worm shaft and worm. The worm meshes with and rotates the slack adjuster worm gear which is connected to the brake cam by a splined cam shaft. The turning of the slack adjuster worm gear rotates the cam shaft and brake cam, spreading the brake shoes, compensating for brake lining wear.

There are two types of adjusting mechanisms used on Bendix slack adjusters currently manufactured. The light to medium torque rated slack adjusters (Fig. 1) use a positive lock mechanism consisting of a spring loaded lock sleeve, which when positioned properly, engages the adjusting screw nut, preventing the adjusting screw (worm shaft) from rotating.

The heavier torque rated slack adjusters (Fig. 2) utilize the lock ball or plunger and worm shaft indent principle adjustment lock. The lock ball or plunger must engage the indent on the worm shaft after the adjustment is completed. An audible metallic click can be heard when engagement is made.

Using the Positive Lock Slack Adjuster Mechanism: (Fig. 1)

Wipe the adjusting screw nut and locking sleeve area clean. Position wrench or socket over the adjusting screw and disengage the locking sleeve by depressing the lock sleeve. Make the necessary adjustment by turning the adjusting screw with the locking sleeve depressed.

When adjustment is completed, the adjusting screw nut should be positioned so the locking sleeve engages the adjusting screw nut, thus locking the adjusting screw in place. DO NOT ATTEMPT TO TURN THE ADJUSTING SCREW WITHOUT FULLY DEPRESSING THE LOCK SLEEVE.

Using the Ball Indent Slack Adjuster Mechanism: (Fig. 2)

Before proceeding with adjustment, measure distance from top of lock screw head to slack adjuster body.

To adjust, back off lock screw (counter clockwise) and make necessary adjustment by turning the adjusting screw. After adjustment is complete, retighten lock screw, making certain that lock ball is engaged on the plunger shaft. (Proper engagement can be confirmed by checking the measurement from the top of the lock screw head to the slack adjuster body. It should be the same before and after the adjustment.)

PROCEDURE

Vehicle brakes should normally be adjusted using the vehicle or brake manufacturer's recommendations. If they are not available, the following can be used:

1. Bring the vehicle to rest on a level surface and chock the wheels.
2. Mechanically release ("cage") the spring brakes.

BRAKE ADJUSTMENT CHECK

A. PREFERRED METHOD

Determine the brake chamber size. Make a 100 psi application to the service brakes and measure the push rod stroke. Using the chart (Fig. 3) compare the actual chamber stroke to the recommended maximum stroke to determine if brake adjustment is required.

CLAMP RING TYPE CHAMBER DATA
(Dimensions in inches)

Type	Effective Area (Sq. In.)	* Outside Diameter	Max. Stroke	Max. Stroke With Brakes Adjusted	Max. Stroke at Which Brakes Should Be Readjusted
6	6	4-1/2	1-5/8	Should	1-1/4
9	9	5-1/4	1-3/4	be as	1-3/8
12	12	5-11/16	1-3/4	short as	1-3/8
16	16	6-3/8	2-1/4	possible	1-3/4
20	20	6-25/32	2-1/4	without	1-3/4
24	24	7-7/32	2-1/4	brakes	1-3/4
30	30	8-3/32	2-1/2	dragging	2
36	36	9	3		2-1/4

*Dimensions listed do not include capscrew head projections for rotochambers and bolt clamp projections for clamp type brake chambers.

FIGURE 3

Slack Adj. Arm Length "A" Dim. (in.)	Push Rod Movement (stroke) "B" Dim. (in.)
5	1-1/2
5-1/2	1-1/4
6	1
6-1/2	3/4

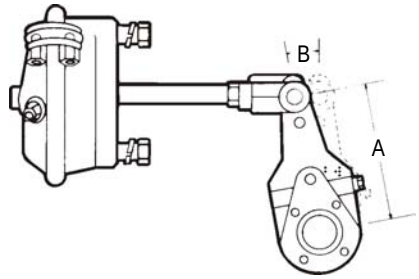

FIGURE 4

B. ALTERNATE METHOD

Determine the slack adjuster arm length (Dim. A). Measure push rod movement (stroke) by manually extending push rod until brake shoes contact drum. Refer to chart (Fig. 4). If Dim. "B" is greater than allowable stroke indicated brakes need to be adjusted.

BRAKE ADJUSTMENT

A. PREFERRED METHOD

Raise the vehicle wheel that is to be adjusted off the ground so that it turns freely. Turn the slack adjuster adjusting mechanism until the brakes begin to drag. Adjustment is then backed off until the wheel turns freely. This adjustment method will result in the shortest possible actuator stroke without the brakes dragging.

B. ALTERNATE METHOD

Regardless of the brake chamber size or the slack arm length adjust the slack adjuster so that there is 3/8" travel of the push rod when manually extended to contact the brake shoes to the brake drum. After adjustment, check for brake drag by gently striking the brake drum with a hammer. When the brake shoes are away from the drum, a ringing sound will be heard. A dull sound indicates brake drag and requires readjustment until the drag is eliminated.

NOTE: If the brakes cannot be adjusted per the above instructions inspect the foundation brake and drum for worn or damaged components.

PREVENTIVE MAINTENANCE

Every month, 8000 miles or 300 operating hours; check push rod travel. Stroke should be short as possible without brakes dragging or chamber rod binding. Adjust if necessary.

Every six months, 500,000 miles or 1800 operating hours; lubricate slack adjuster with chassis lube N.L.G.I. grade 1 or 2. Apply a sufficient amount of grease to completely fill body cavity.

SLACK ADJUSTERS MOUNTED IN TENSION OR COMPRESSION

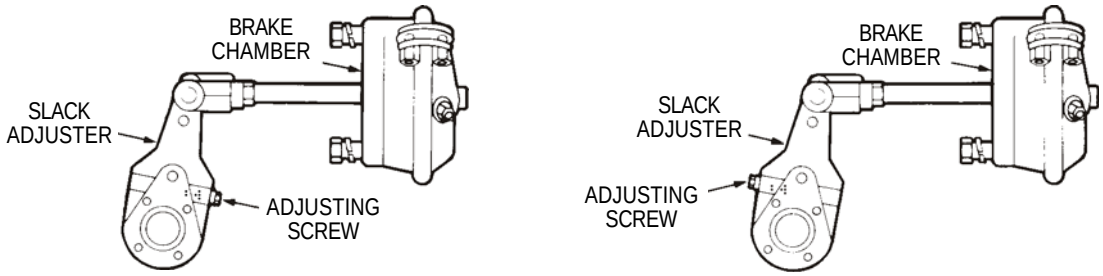

TENSION COMPRESSION

PROVIDED THE MAXIMUM TORQUE RATING IS NOT EXCEEDED, BENDIX SLACKS CAN BE MOUNTED IN EITHER DIRECTION AND STILL MEET THE ENGINEERING TEST SPECIFICATION (50K CYCLES AT MAXIMUM RATED LOAD). COMPRESSION MOUNTING IS RECOMMENDED AND WILL YIELD A LONGER SERVICE LIFE.

NOTE: Some Bendix slack adjusters were manufactured without a lubrication provision in the body; however, the slack adjuster may be lubricated through the cover as follows:

1. Remove rubber plugs from both covers and discard.
2. Determine which side of slack adjuster is accessible for lubrication and install washer (Pc. No. 230156) and grease fitting (BW Pc. No. 244017) Alemite #1625 using Alemite tool #5254 to press grease fitting firmly in place in cover.
3. Install steel plug (Pc. No. 244400) in other cover, making certain it is firmly in place.
4. Lubricate slack adjuster. Apply a sufficient amount of grease to completely fill body cavity.

SERVICE TESTS

1. Apply brakes and check that slack adjusters rotate freely and without binding.
2. Release brakes and check that slack adjusters return to the released position without binding.
3. With brakes released, check that the angle formed by the slack adjuster arm and actuator push rod is greater than 90 degrees. All slack adjusters should be set at this same angle.
4. With brakes applied, check that the angle formed by the slack adjuster arm and actuator push rod is still slightly greater than 90 degrees. All slack adjusters should be set at this same angle.

REMOVAL AND INSTALLATION

CAUTION: Before attempting to remove slack adjusters, proper precautions should be taken so that an automatic application of the actuators does not occur while removing or installing slack adjusters, thus causing possible injury. Decreasing air pressure can cause a sudden full brake application without warning. Depending on type of system on vehicle, it maybe necessary to drain all air reservoirs or mechanically back off spring brake chambers.

A. REMOVAL

1. Remove the chamber push rod yoke pin.
2. Remove the retaining mechanism from end of brake cam shaft.
3. Rotate the slack adjuster by turning the adjusting nut.
4. Slide the slack adjuster off of the spline end of the brake cam shaft.

B. INSTALLATION

1. Install slack adjuster on brake cam shaft so the adjustment screw and grease fitting (if so equipped) are accessible for servicing.
2. Install retaining mechanism on end of brake cam shaft to hold slack adjuster in place.
3. Turn adjusting nut to line up yoke pin hole with arm hole. Install yoke pin and cotter pin.
4. Refer to steps 3 and 4 under “Service Tests” and make sure the proper adjustments are made after installing a slack adjuster.

SLACK ADJUSTER REPLACEMENT

When replacing one type of slack adjuster with another type, it is necessary to match or exceed the torque rating and match the arm length, yoke pin diameter, offset spline diameter and width. It is also necessary to make certain that there is adequate clearance at release and full stroke.

DISASSEMBLY AND ASSEMBLY

NOTE: Disassembly and assembly instructions apply only to assemblies with riveted covers. Assemblies with welded covers are considered non-serviceable and are replaced as an assembly.

TYPE 20 TO 30 WITH POSITIVE LOCK MECHANISM AND RIVETED COVER DISASSEMBLY

1. Remove rivets holding covers.
2. Remove welch plug.

3. Before removing worm shaft, measure height from top of adjusting screw to the slack adjuster body. This measurement is important, as it serves as a reference when the worm shaft is reassembled.
4. Press out worm shaft from worm by pressing in on the end of the worm shaft opposite the adjusting screw nut.
5. Remove worm shaft, worm shaft lock and worm lock spring.
6. Remove worm and slack adjuster worm gear from slack adjuster body.

TYPE 35 WITH POSITIVE LOCK MECHANISM

DISASSEMBLY

1. Remove retaining ring holding the cover, cover nut and gear in place.
2. Remove set screw in worm nut.
3. Depress worm lock and remove lock nut pin.
4. Remove worm lock and worm lock spring.
5. Unscrew worm nut.
6. Remove worm shaft, worm and gear from slack adjuster body.
7. Before removing worm shaft, measure height from top of adjusting screw to the slack adjusted body. This measurement is important, as it serves as a reference when the worm shaft is reassembled.
8. Press out the worm shaft from worm by pressing on the end of the worm shaft opposite the adjusting screw nut.

TYPE 35 AND TYPE 55 (WITHOUT RIVETED COVER) AND BALL INDENT LOCK MECHANISM DISASSEMBLY

1. Remove cam lock pin, cam lock, thrust washer, plunger spring and plunger.
2. Bend up tab of lock washer and remove worm nut.
3. Remove retaining ring and cover.
4. Before removing worm shaft, measure height from the top of adjusting screw to the slack adjuster body. This measurement is important, as it serves as a reference when the worm shaft is reassembled.
5. Remove worm and shaft and slack adjuster gear.
6. Remove plunger and plunger spring from body.
7. If worm gear is to be pressed from shaft, note dimension from end of shaft to gear before proceeding.

TYPE 35, 40, 55 (WITH RIVETED COVER AND BALL INDENT LOCK MECHANISM) DISASSEMBLY

1. Remove rivets holding the covers.
2. Remove welch plug.
3. Before removing ball indent lock mechanism, measure and note distance from top of lock screw head to slack adjuster body.
4. Remove ball indent lock mechanism screw.
5. Remove spring and ball.
6. Before removing worm shaft, measure height from top of adjusting screw to the slack adjuster body. This measurement is important, as it serves as a reference when the worm shaft is reassembled.
7. Press out worm shaft from worm by pressing on end of worm shaft opposite the adjusting nut.
8. Remove worm and slack adjuster worm gear.

CLEANING AND INSPECTION

Wash all parts in mineral spirits and dry. Inspect parts and replace any part showing signs of wear or deterioration.

TYPE 20 TO 30 WITH POSITIVE LOCK MECHANISM AND RIVETED COVER ASSEMBLY

1. Place worm and worm gear in slack adjuster body.
2. Position and press the worm shaft, worm shaft lock and spring into the worm and slack adjuster body. The recess in the worm shaft lock must be lined up with the pin in the slack adjuster body before pressing into position. Make certain that when pressing the worm shaft into the body that the height measurement between the top of the adjusting screw and slack adjuster body is the same before and after removal.
3. Install covers and rivet securely.
4. Install new welch plug in body.
5. Lubricate as outlined in “Preventive Maintenance” section.

TYPE 35 WITH POSITIVE LOCK MECHANISM ASSEMBLY

1. Press worm shaft into worm. Care should be exercised to be sure the worm shaft is pressed into the proper dimension.
2. Install the worm shaft, worm and gear in the slack adjuster body.
3. Make certain that when pressing the worm shaft into the body that the height measurement between the top of the adjusting screw and slack adjuster body is the same before and after removal.
4. Install worm lock guide pin in worm nut.
5. Screw the worm nut into slack adjuster body.
6. Install worm lock and worm lock spring over worm shaft and adjusting screw nut.
7. Depress worm lock and install lock nut pin in adjusting screw nut.
8. Install set screw in worm nut.
9. Assemble cover and cover nut to the body by installing the retaining ring.
10. Lubricate slack adjuster as outlined in “Preventive Maintenance” section.

TYPE 35 AND TYPE 55 (WITHOUT RIVETED COVER) AND BALL INDENT LOCK MECHANISM ASSEMBLY

1. Install plunger spring and plunger in body.
2. Install slack adjuster gear in body.
3. If worm was removed from shaft, new worm should be pressed on shaft noting dimension as instructed in No. 4 of disassembly procedure.
4. Install worm and shaft. Worm and shaft must be run in so that the worm fully engages slack adjuster worm gear. Make certain that when pressing the worm shaft into the body that the height measurement between the top of the adjusting screw and slack adjuster body is same before and after removal.
5. Install cover and retaining ring in groove of body.
6. Install new lockwasher on worm nut in body and tighten. Bend up at least 2 tabs of lockwasher, one of which should fit in groove of body.
7. Install plunger spring, thrust washer and plunger in lock hole.
8. Install cam lock in body. Install pin.
9. Lubricate slack adjuster, as outlined in “Preventive Maintenance” section.

TYPE 35, 40, 55 (WITH RIVETED COVER AND BALL INDENT LOCK MECHANISM) ASSEMBLY

1. Place worm and worm gear in slack adjuster body.
2. Press the worm shaft into the worm. The indents in the worm shaft must be lined up with the ball lock hole. Make certain that when pressing the worm shaft into the body that the height measurement between the top of the adjusting screw and slack adjuster body is the same before and after removal.
3. Install covers and rivet securely.
4. Install ball, spring and ball indent lock mechanism. Turn adjusting screw, allowing ball to fully engage indent in shaft. Check for full engagement by tightening lock mechanism screw to same dimension as noted in step #3 of “Disassembly” instructions.
5. Before installing welch plug, grease bottom of shaft. Install new welch plug.
6. Lubricate slack adjuster as outlined in “Preventive Maintenance” section.

TEST OF REBUILT SLACK ADJUSTERS

After lubricating rebuilt slack adjuster (see “Preventive Maintenance” section), all moving parts of the slack adjusters should rotate freely and not bind. With slack adjuster installed in vehicle, refer to “Service Test” section. Check that rebuilt slack adjuster functions properly.

GENERAL SAFETY GUIDELINES

WARNING! PLEASE READ AND FOLLOW THESE INSTRUCTIONS TO AVOID PERSONAL INJURY OR DEATH:

When working on or around a vehicle, the following general precautions should be observed at all times.

1. **Park the vehicle on a level surface, apply the parking brakes, and always block the wheels. Always wear safety glasses.**
2. **Stop the engine and remove ignition key when working under or around the vehicle. When working in the engine compartment, the engine should be shut off and the ignition key should be removed. Where circumstances require that the engine be in operation, EXTREME CAUTION should be used to prevent personal injury resulting from contact with moving, rotating, leaking, heated or electrically charged components.**
3. **Do not attempt to install, remove, disassemble or assemble a component until you have read and thoroughly understand the recommended procedures. Use only the proper tools and observe all precautions pertaining to use of those tools.**
4. **If the work is being performed on the vehicle’s air brake system, or any auxiliary pressurized air systems, make certain to drain the air pressure from all reservoirs before beginning ANY work on the vehicle. If the vehicle is equipped with an AD-IS® air dryer system or a dryer reservoir module, be sure to drain the purge reservoir.**
5. **Following the vehicle manufacturer’s recommended procedures, deactivate the electrical system in a manner that safely removes all electrical power from the vehicle.**
6. **Never exceed manufacturer’s recommended pressures.**
7. **Never connect or disconnect a hose or line containing pressure; it may whip. Never remove a component or plug unless you are certain all system pressure has been depleted.**
8. **Use only genuine Bendix® replacement parts, components and kits. Replacement hardware, tubing, hose, fittings, etc. must be of equivalent size, type and strength as original equipment and be designed specifically for such applications and systems.**

9. **Components with stripped threads or damaged parts should be replaced rather than repaired. Do not attempt repairs requiring machining or welding unless specifically stated and approved by the vehicle and component manufacturer.**

10. **Prior to returning the vehicle to service, make certain all components and systems are restored to their proper operating condition.**

11. **For vehicles with Antilock Traction Control (ATC), the ATC function must be disabled (ATC indicator lamp should be ON) prior to performing any vehicle maintenance where one or more wheels on a drive axle are lifted off the ground and moving.**

BW1453 © 2007 Bendix Commercial Vehicle Systems LLC All rights reserved. 3/2007 Printed in U.S.A.

AGENDA

Haldex

L30033
11/01

SERVICE MANUAL

Truck and Trailer Applications

AUTOMATIC BRAKE ADJUSTERS

Innovative Vehicle Technology

Table of Contents

Operation 1

Brake Adjuster Part Number
and Build Date 1

Steer Axle Applications..... 2

Drive Axle Applications..... 2

Trailer Axle Applications 3

Installation Procedures 4

Routine Visual/Operational Checks . . .6

Service and Lubrication Intervals 6

Foundation Brake Operational
Check and Troubleshooting 7

Brake Adjuster Checking Procedures . .9

Brake Adjuster Operational Check 9

Typical Parts Identification
and Location 10

Torque Specifications.....11

Frequently Asked Questions 12

Additional Parts and
Service Information.....13

Important Notice
This symbol is used throughout this manual to call attention to procedures where carelessness or failure to follow specific instructions may result in personal injury and/or component damage.

The description and specifications contained in this service publication are current at the time of printing. Haldex Brake Products Corp. reserves the right to discontinue or modify its models and/or procedures and to change specifications at any time without notice.

Operation

The Haldex automatic brake adjuster is a clearance sensing brake adjuster that maintains a nominal distance or clearance between lining and drum.

When the Brake Applies:

Upon brake application, the brake adjuster rotates and moves the shoes into contact with the drum. The clearance notch corresponds to the normal lining-to-drum clearance. As the brake application continues, the rack moves upward and rotates the one-way clutch which slips in this direction. As the brake torque increases, the coil spring load is overcome and the wormshaft is displaced axially, releasing the cone clutch.

When the Brake Releases:

When the brake begins its return stroke, the coil spring load returns to normal and the cone clutch is again engaged. The rack is pulled back to its original position in the notch, and any additional travel brought about by lining wear causes the rack to turn the locked one-way clutch and rotates the wormshaft through the locked cone clutch. The wormshaft then rotates the worm wheel and camshaft, adjusting the brakes.

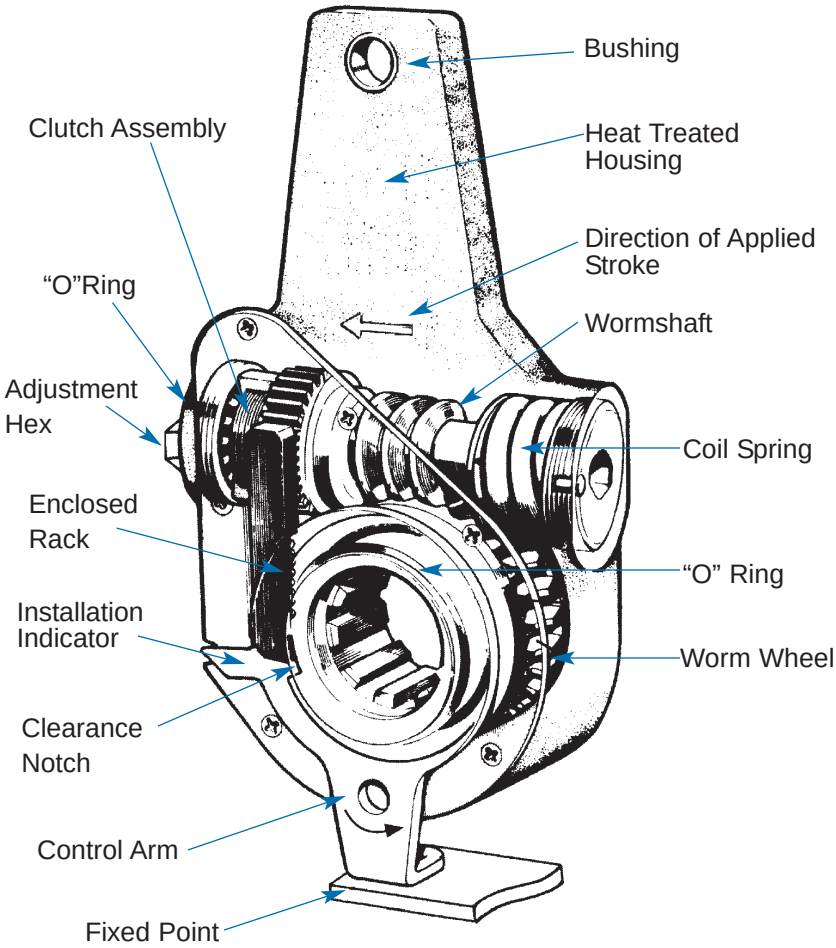

Brake Adjuster Identification

Part Number:
409 prefix = Reduced maintenance adjuster
429 prefix = No-Lube™ adjuster

Serial Number:
First 3 digits = Day of year built
Last 2 digits = Year of build

After Sept. 1989
The Part No. P/N40910224 would be our adjuster part number 409-10224.

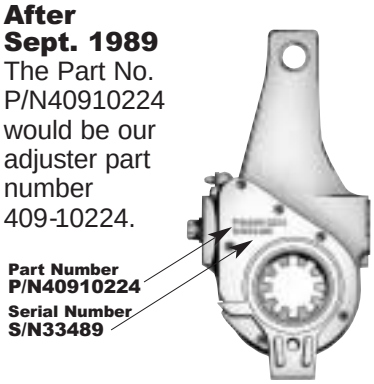

Prior to Sept. 1989
The first three numbers stamped on the cover plate is the brake adjuster part number. For example: 224 would be our adjuster part number 409-10224.

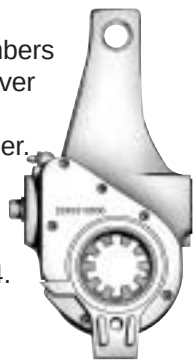

Typical Applications

Steer Axle
Figures 1–4 show typical brackets for automatic brake adjuster applications on steer axle brake assemblies. Refer to pages 4 and 5 for detailed installation procedures.

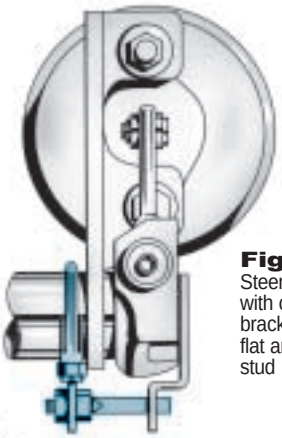

Figure 1
Steer axle with clamp bracket and flat anchor stud

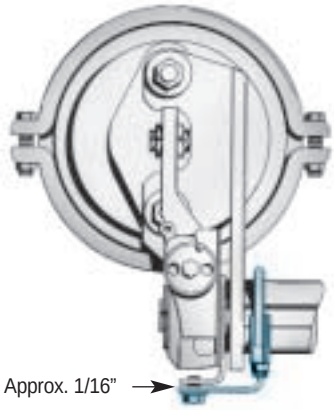

Figure 2
Steer axle with clamp bracket and round anchor stud

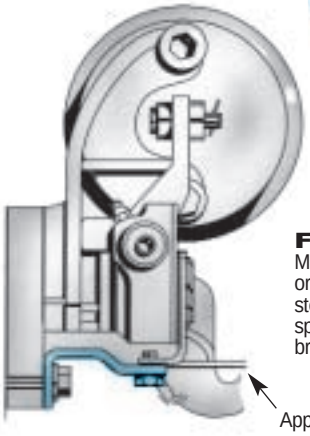

Figure 3
Mack 16,000# or higher rated steer axles with spider mounted bracket

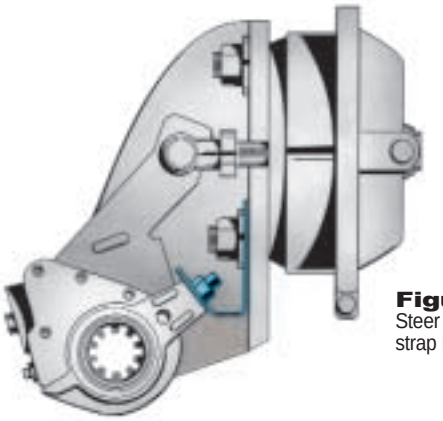

Figure 4
Steer axle with strap bracket

Drive Axle
Figures 5–8 show typical brackets for automatic brake adjuster applications on drive axle brake assemblies. Refer to pages 4 and 5 for detailed installation procedures.

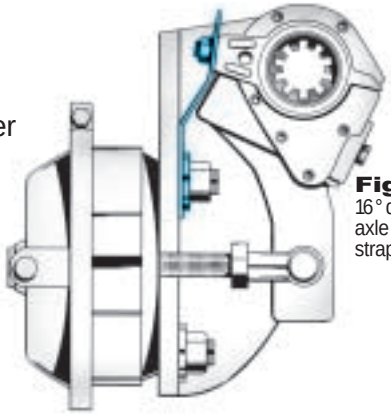

Figure 5
16° drive axle with strap bracket

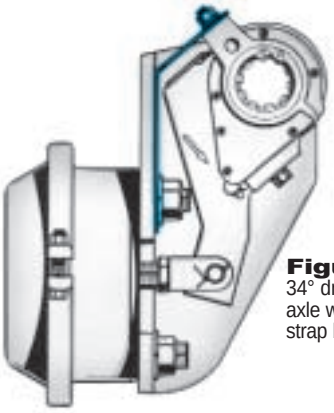

Figure 6
34° drive axle with strap bracket

Figure 7
Mack drive axle with clamp bracket and flat anchor stud

Figure 8
0° Kenworth drive axle with strap bracket, for 8 bag air ride

Note: Refer to fundamental parts identification and location on page 10.

Typical Applications

Trailer Axle

Figures 9–12 show typical brackets for automatic brake adjuster applications on trailer axle brake assemblies. Refer to pages 4 and 5 for detailed installation procedures.

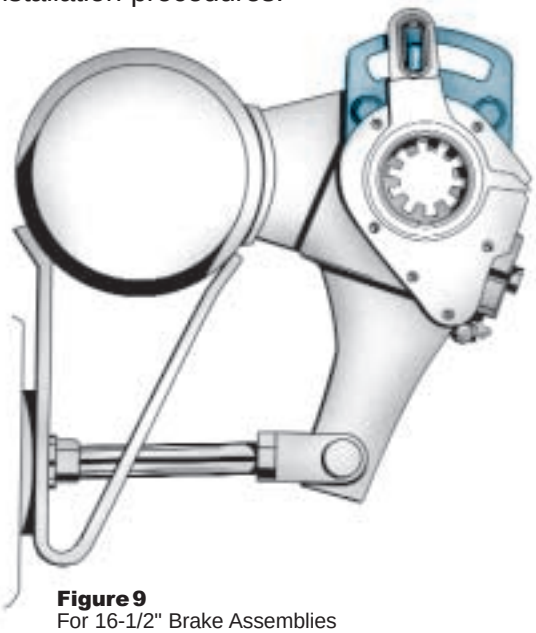

Figure 9
For 16-1/2" Brake Assemblies

Figure 10
For 12-1/4" Brake Assemblies

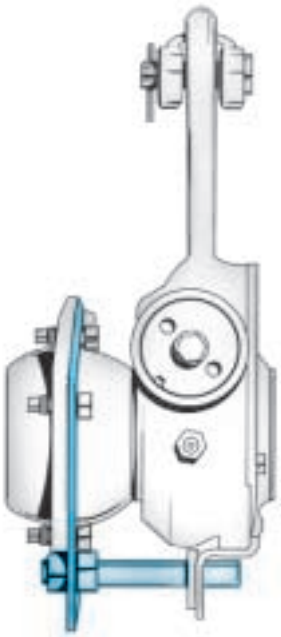

Figure 11
Integral cam support anchor bracket for 12-1/4" and 16-1/2" brakes

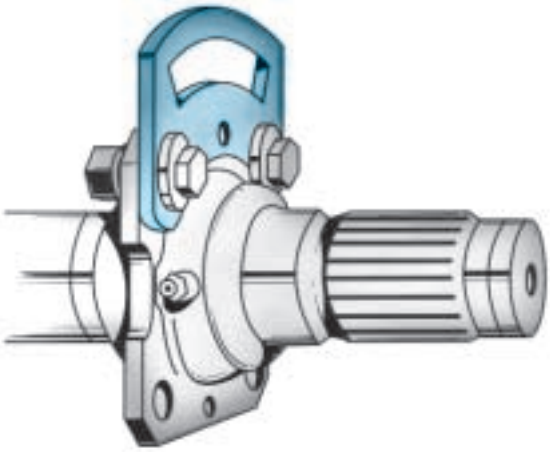

Figure 12
Bolt-on cam support anchor bracket for 12-1/4" and 16-1/2" brakes

Note: Refer to fundamental parts identification and location on page 10.

Installation Procedures

Note: Configuration of anchor bracket and brake adjuster housing may vary, depending upon axle. Refer to typical applications on Page 2 and 3.

Step 1

Note: Block wheels to prevent vehicle from rolling. Ensure system tank pressure is above 100 PSI.

- Check that the push rod is fully retracted; apply air to release spring brake. If air is not available, spring brake must be manually caged back.
- Install anchor bracket loosely as illustrated (fig. 13).
- Some strap brackets have two mounting holes. Proper mounting location is determined by the length of adjuster arm. 5" and 5-1/2" adjuster arm lengths utilize the shorter hole location while 6" and 6-1/2" length adjusters utilize the longer hole locations.
- Do not tighten anchor bracket fasteners at this time.
- Apply “Anti-Seize” type lubricant to camshaft splines.

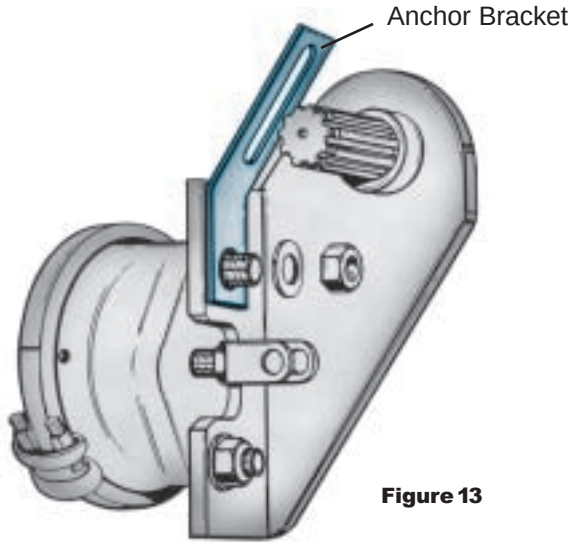

Figure 13

Step 2

- Install the brake adjuster onto the camshaft <u>with the adjusting hex pointing away from the brake chamber</u> (fig. 14).
- Secure the brake adjuster on the camshaft. Use at least one inner washer and enough outer washers to allow no more than .060 movement of adjuster on camshaft. (Per TMC recommended practice RP609-A.)

Note: Do NOT pull push rod out to meet the brake adjuster.

- Rotate the 7/16" adjusting hex nut CLOCKWISE until the clevis hole lines up with the brake adjuster arm hole.
- Apply anti-seize to clevis pin, install and secure with cotter pin.

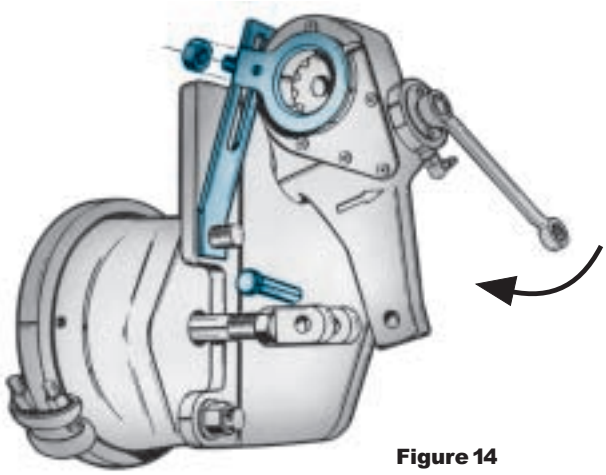

Figure 14

Installation Procedures

Step 3

- Rotate the control arm away from the adjusting hex toward the air chamber, until it comes to a definite internal stop (fig. 15).
- Most adjusters will be equipped with an "Installation Indicator." Indicator must fall within the slot for proper installation with brakes fully released (fig. 16).
- **If the control arm position is wrong, tight brakes will occur (fig. 17).**
- Tighten all anchor bracket fasteners (make sure the control arm does not move from its position while tightening fasteners).

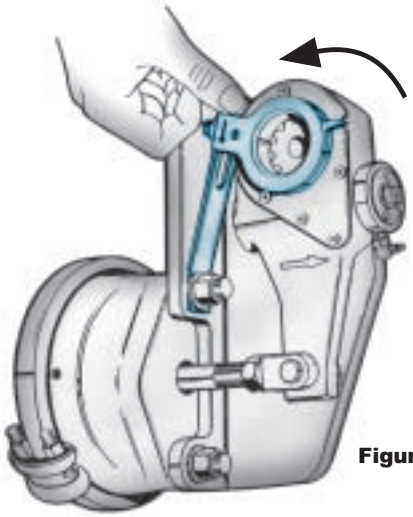

Figure 15

Step 4

- The adjuster must be manually adjusted at this time.
- Rotate the adjusting hex clockwise until the lining lightly contacts the drum.
- Then back-off the adjuster by turning the adjusting hex counter-clockwise 1/2 of a turn (fig. 18).
- A minimum of 13 ft. lbs. is necessary to overcome the internal clutch. A ratcheting sound will be present.
- **Do NOT use an impact wrench or internal damage will occur!**
- **FINAL INSPECTION.** With full service brake application, assure that spring brakes are released, and check that the "Installation Indicator" is within the slotted area. **IF NOT, REPEAT Step 3.**

Correct
(Brakes released)
Figure 16

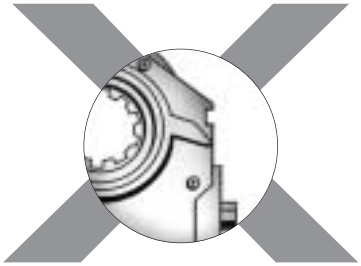

INCORRECT
(Brakes released)
Figure 17

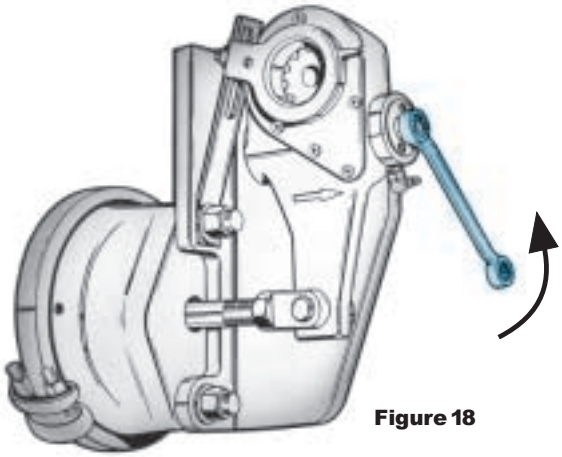

Figure 18

Note: To ensure proper fit and function, always replace both adjuster and mounting bracket.

Routine Visual/Operational Checks

- **Haldex strongly recommends that routine visual/operational checks, including brackets and control arms, be performed at each Preventative Maintenance Service Interval.**

- **Adjusters or anchor brackets that have visual damage, or which fail the operational checks, MUST be replaced immediately.**

- **Automatic adjusters should not be operated as manual adjusters except as may be necessary to get the vehicle off the road for service.**

Service and Lubrication Intervals

Adjuster Type	Manufacture Date	Lubrication Interval	Type of Lubricant	Visual Check Interval
Standard Adjuster 409-10...	Prior to 6/1/96	50,000 miles or every 3 months	Standard Chassis Grease	Each Preventative Maintenance Service Interval
Reduced Maintenance Adjuster 409-10...	After 6/1/96	Once a year	Standard Chassis Grease	Each Preventative Maintenance Service Interval
No-Lube™ Adjuster 429-10...	After 6/1/96	None	Sealed Unit	Each Preventative Maintenance Service Interval

Notes:

No-Lube™ automatic brake adjusters are manufactured without a grease fitting and are identified by a 429 prefix.

Moly-disulfide grease should not be used because it may affect the function of the internal friction clutches and reduce the reliability of the automatic adjustment.

In no case should the lubrication interval exceed the published intervals shown above.

Foundation Brake Operational Check and Troubleshooting

Note:
- Block wheels to prevent vehicle from rolling.
- Ensure system tank pressure is at 90-100 psi.
- Check that push rod is fully retracted; apply air to release spring brake.

North American Commercial Vehicle Safety Alliance (CVSA)
Uniform Vehicle Inspection Criteria

The applied stroke of the brake should be checked per CVSA guidelines at 90-100 PSI reservoir pressure. **Applied stroke** should be at or less than the specified adjustment limits as follows:

Standard Clamp Type Brake Chamber			
Type	Adjustment Limit	Type	Adjustment Limit
9	1-3/8"	24	1-3/4"
12	1-3/8"	30	2"
16	1-3/4"	36	2-1/4"
20	1-3/4"		

Long Stroke Type Brake Chamber			
Type	Adjustment Limit	Type	Adjustment Limit
16L	2"	24LS	2-1/2"
20L	2"	30LS	2-1/2"
24L	2"		

NOTE: Long stroke chambers are identified with square air ports or port bosses and special trapezoid ID tags.

Free Stroke

Measuring the Free Stroke

Free stroke is the amount of movement of the adjuster arm required to move the brake shoes against the drum. With brakes released, measure from the face of the chamber to the center of the clevis pin “A” (fig. 19). Use a lever to move the brake adjuster until the brake shoes contact the drum “B” (fig. 19). The difference between the fully retracted and drum contact measurement “B”–“A” (fig. 19), is the free stroke. The free stroke range should fall between 3/8"–3/4".

Free Stroke Within Range

If the free stroke is good, but the applied stroke is too long, there is probably a problem with the foundation brake. Check the following and reference CVSA out-of-service criteria:

Component	Cause	Action
Brake drums	Cracked or out of round	Replace or check drum run out
Brake shoes	Shoe span out of spec	Refer to OEM specs and replace if necessary
Brake shoes	Uneven lining wear	Check spider concentricity
Brake shoes	Shoe pad missing	Remove & replace shoes
Brake shoes	Cracked shoes	Remove & replace shoes
Cam bushings	Excessive movement	Remove & replace cam bushings per OEM specs
Camshaft	Flat spots on cam head	Replace camshaft
Camshaft	Cracked/broken splines	Replace camshaft
Camshaft	Worn bearing journals	Replace camshaft
Chamber bracket	Broken/bent	Replace bracket
Clevis yoke and pin	Worn	Remove & replace
Return springs	Broken/stretched or missing	Remove & replace springs
Rollers	Flat spots, grooved pin/worn	Remove & replace roller and pin
Rollers	Wrong size	Remove & replace with correct parts
Spider anchor pins	Grooved or scored/worn	Replace spider or pins, as appropriate for OEM

Free Stroke Above the Range

If the free stroke is above the range and the applied stroke is too long, there is a problem with the foundation brake or the adjuster. Check the following:

Component	Cause	Action
Camshaft	Binding	Remove, replace, lubricate camshaft
Camshaft bushings	Excessive movement	Remove and replace cam bushings per OEM specs
Camshaft bushings	Binding shaft	Lubricate camshaft bushings or replace
Air chamber return springs	Broken, weak, missing	Replace chamber
Air chamber push rod	Binding on chamber housing	Check adjuster for proper shimming and air chamber position for proper adjuster arm length
Air system	Not exhausting completely	Check for cause of air problem and repair
Shoe return springs	Broken, weak, missing	Replace springs
Automatic brake adjuster	Unknown	Check automatic brake adjuster for proper installation. Refer to Installation Instructions on pages 4 & 5.
Automatic brake adjuster	Unknown	Refer to Automatic Brake Adjuster Checking Procedures and Operational Check on pages 9 & 10.

Free Stroke Below the Range

If the free stroke is less than 3/8”, a dragging brake can occur. Check the following:

Component	Cause	Action
Wheel bearing	Out of adjustment	Readjust per OEM specs
Automatic brake adjuster	Unknown	Check automatic brake adjuster for proper control arm position. Refer to Installation Instructions on pages 4 & 5.
Automatic brake adjuster	Unknown	Refer to Automatic Brake Adjuster Checking Procedures and Operational Check on pages 9 & 10.

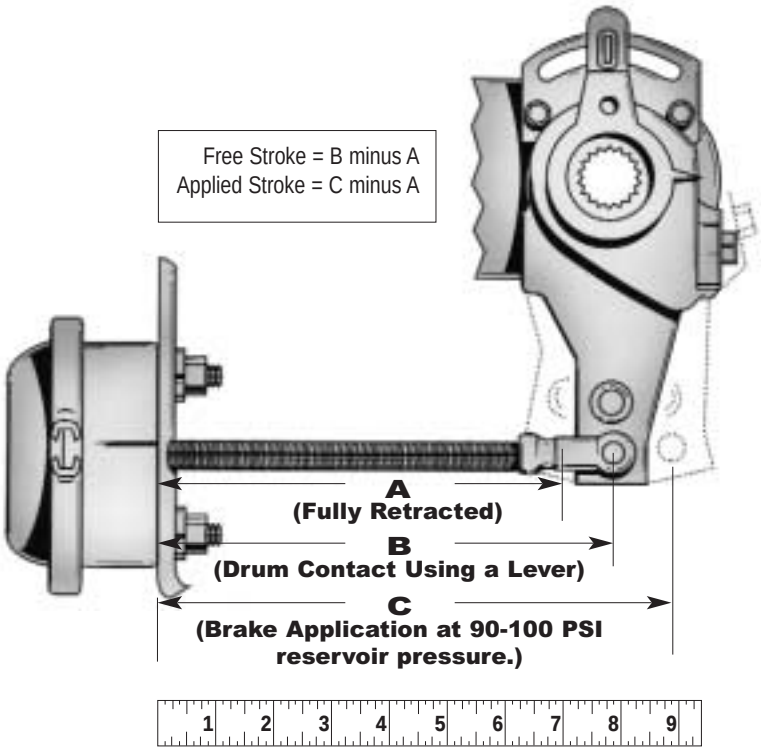

Figure 19
Stroke Measurements
(taken from face of air chamber to center of clevis pin)

Automatic Brake Adjuster Checking Procedures

If the brake adjuster is not maintaining the proper applied stroke, before removing the brake adjuster, check the condition of the foundation brake (see pages 7 & 8). **If after inspecting the foundation brake** no apparent problems are found, inspect the automatic brake adjuster to determine if it is operating properly. The inspection can be performed on or off the vehicle using the following procedures.

Note:
- Block wheels to prevent vehicle from rolling.
- Ensure system tank pressure is at 90-100 PSI.
- Check that push rod is fully retracted; apply air to release spring brake.
- If air is not available, spring brake must be manually caged back.
- Do not use air tools on brake adjuster!

On Vehicle Inspection

Component	Cause	Action
Tight or dragging brakes	Control arm mispositioned	Realign control arm and anchor bracket. Check installation procedures on pages 4 & 5.
Excessive chamber push rod travel	Improper anchor bracket connection to control arm	If anchor bracket to control arm connection is worn, loose, bent or broken, it must be re-secured or replaced.
	Low clutch torque	Rotate the 7/16" adjustment hex one full turn counterclockwise. Replace brake adjuster if the torque is less than 13 ft. lbs. or no racheting sound occurs.
	Unknown	Perform automatic brake adjuster operational check (see below).

Automatic Brake Adjuster Operational Check

Functional operation of the brake adjuster can be performed on the vehicle by using the following procedure:

- Block wheels to prevent vehicle from rolling.
- Ensure tank pressure is at 90-100 psi.
- Check that the push rod is fully retracted; apply air to release spring brake. If air is not available, spring brake must be manually caged back.

Manually de-adjust brakes (turn adjustment hex counterclockwise one full turn) to create an excessive drum to lining clearance condition. (A ratcheting sound should occur.)

Make a full service brake application. On release, allow sufficient time for brake to fully retract.

During the brake release, observe rotation of the adjustment hex (attaching a wrench on the hex or scribing the hex will make this rotation easier to see).

This rotation indicates that an excessive clearance condition has been determined by the brake adjuster, and it is making an adjustment to compensate. On each subsequent brake release, the amount of adjustment and push rod travel will be reduced until the desired clearance is achieved.

If rotation of the adjustment hex is not observed, refer to Foundation Brake Operational Check and Troubleshooting Procedures on pages 7 and 8. If foundation brake assembly checks out okay and hex still does not turn, check control arm and mounting bracket for possible worn, bent or broken components. If the control arm and mounting bracket check out okay, replace the adjuster and hardware per procedures on pages 4 & 5.

Off Vehicle Inspection

Component	Cause	Action
Adjuster not functioning properly	Low clutch torque	Place adjuster arm in vise. Rotate the 7/16" adjustment hex counterclockwise one full turn to check de-adjustment torque. After control arm stops rotating, a minimum of 13 ft. lbs. will be required and a ratcheting sound will occur. Replace brake adjuster if the torque is less than 13 ft. lbs. or no de-adjustment ratcheting sound is present.
	Control Arm slippage	Place adjuster arm in vise. Rotate the control arm counterclockwise until the control arm rotates to an INTERNAL STOP. If the installation indicator goes past the indicator notch or does not stop rotating (arm slips freely), replace the brake adjuster.
	Unknown	If torque is above 13 ft. lbs., scribe a line on the adjustment hex. Manually pull the brake adjuster control arm clockwise then push back counter-clockwise until the installation indicator stops in the indicator notch. The hex will move in a clockwise direction when the control arm of the brake adjuster is pushed back counterclockwise. Replace adjuster is hex does not move.
	Worn/missing control arm wear bushing, and anchor stud pin, if applicable.	Remove and replace pin and bushings. If adjuster has passed the above checks, re-install adjuster on vehicle, with new hardware.

Typical Parts Identification and Location

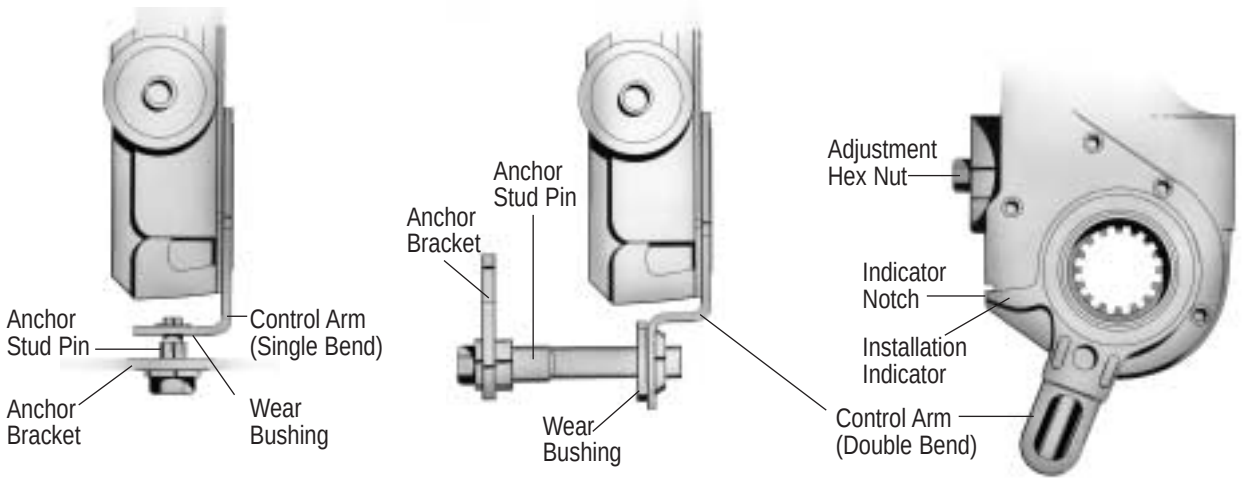

Torque Specifications

Note: Tighten all fasteners to manufacturer's recommendations unless otherwise specified below.

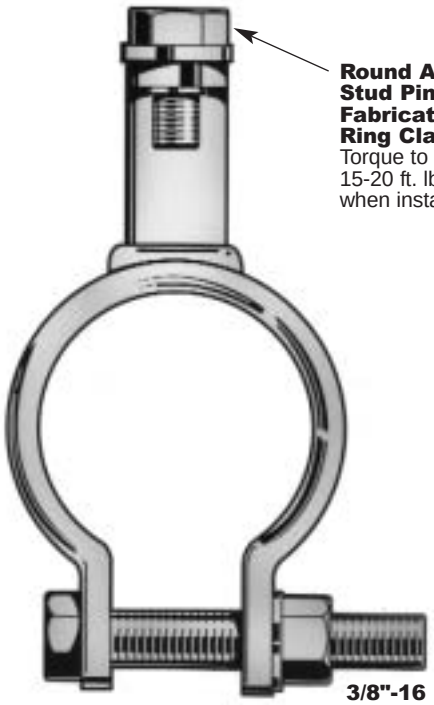

Round Anchor Stud Pin with Fabricated Ring Clamp
Torque to 15-20 ft. lbs. when installed

3/8"-16 Nut and Bolt
Torque to 15-20 ft. lbs. when installed

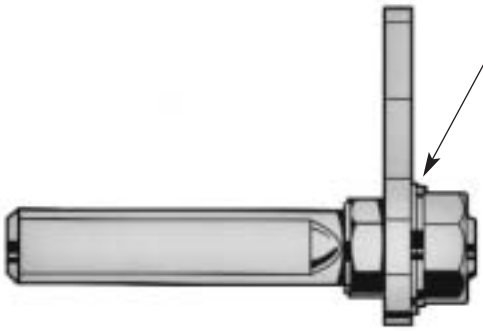

Flat Anchor Stud Pin
Torque to 40-50 ft. lbs. when installed

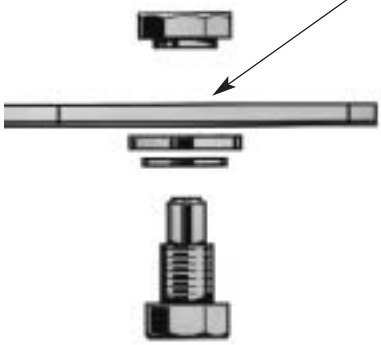

Round Anchor Stud Pin with Slide Nut
Torque to 15-20 ft. lbs. when installed

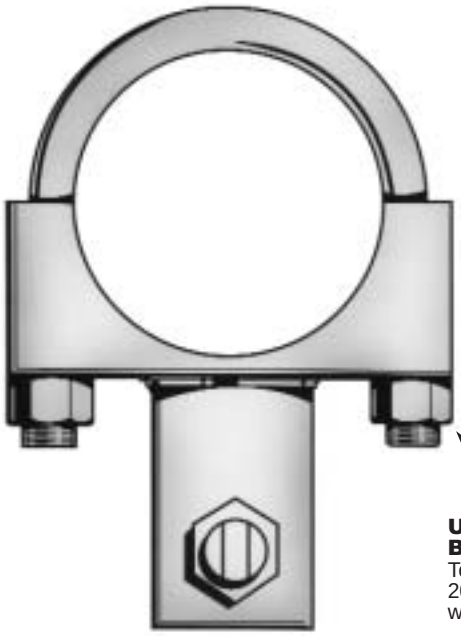

U-Bolt Style Bracket
Torque to 20-30 ft. lbs. when installed

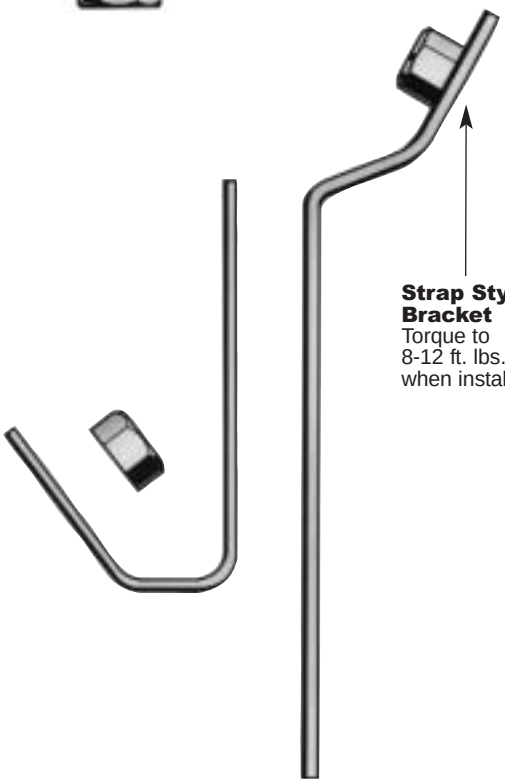

Strap Style Bracket
Torque to 8-12 ft. lbs. when installed

Frequently Asked Questions

1. Will the side of the brake adjuster with the installation indicator always face in?

No. Haldex adjusters are normally unhanded. Always install with the adjusting hex pointing away from the air chamber.

2. My adjuster doesn't have an installation indicator; should I be concerned?

No. A few applications aren't manufactured with installation indicators. However, the set-up and function are the same regardless. Refer to pages 4 & 5 for proper installation procedures.

3. Why is there resistance when backing off the adjuster?

It takes approximately 20-25 lb. ft. of torque to back off the adjustment hex. (A ratcheting sound should occur.)

4. How far do I back off the automatic brake adjuster at a brake reline?

1/2 turn. (NOTE: for the first 1/8 turn you may not hear the ratcheting; this is normal.)

5. How do I know if I need an offset, angled or straight-armed adjuster?

Haldex manufactures the right adjuster arm for your specific application. Haldex adjusters are unhanded (no lefts or rights) in the majority of applications. Please refer to the Haldex Parts and Cross Reference Guide for your specific application (ABA10001).

6. Why does my replacement ABA look different from the original I took off?

The Haldex ABA replacement adjuster has been designed to fit a number of applications. It is the same original equipment quality and design of the adjuster you removed; however, it may look different on the outside. If you use all the parts included in the kit, the results will be the same as the original equipment adjuster.

7. Why is the applied stroke pressure range 90-100 psi at the reservoir?

This is the pressure recommended by the CVSA (Commercial Vehicle Safety Alliance). Anything beyond 100 psi measures deflection within the foundation brake and not true push rod stroke.

8. Some brake chambers have round port openings and some square; what is the difference?

Standard brake chambers are identified by round ports. Long stroke chambers are identified by square ports and trapezoid ID tags.

9. Can I vary the amount of lining-to-drum clearance by moving the control arm?

No, that clearance is set at the factory. If long or short stroke continues, please refer to the foundation brake checking procedures on pages 7 & 8 of this manual.

10. Can I use an air ratchet on the adjuster?

No. It will damage the internal mechanism of the adjuster and render it inoperative.

11. Can I access the adjuster through the rear cover?

No, do not tamper with the rear cover—it will release the factory set pressure on the spring and destroy the adjuster and its ability to properly function.

12. How much control arm bushing and anchor stud pin wear is acceptable before replacement is required?

No more than 1/16."

13. What is the acceptable amount of camshaft bushing wear?

Automatic adjusters cannot compensate for worn foundation brake parts. Please refer to the foundation brake manufacturer's recommendations for maximum bushing and camshaft wear limits.

14. Can wheel bearing adjustment affect the brake adjuster?

Yes. Improper wheel bearing adjustment could result in improper brake adjustment. It is necessary to refer to the axle manufacturer's wheel bearing adjustment recommendations. A loose bearing preload could cause a tight brake.

(continued on page 13)

Frequently Asked Questions (continued)

15. Are all Haldex automatic brake adjusters pre-lubed?

Yes. All Haldex brake adjusters are lubricated at the factory. Please consult the Service and Lubrication Section on Page 6 for proper lubrication guidelines.

16. Can I use moly lube with the Haldex automatic brake adjuster?

No. A high concentration of moly-disulfide can lower the friction capabilities in the adjusting clutch parts and decrease automatic adjustment reliability.

17. Can I purchase anchor bracket wear items separately (i.e., anchor stud pins, wear bushings)?

Yes. Normal wear items like anchor stud pins and wear bushings are available. Refer to the Haldex Parts and Cross Reference Guide, ABA10001. Otherwise, contact Haldex Technical Assistance for the appropriate bracket kit at 1-800-643-2374.

18. Does the control arm need to be properly set and secured?

Yes. Without proper placement and attachment, the adjuster will not function properly. Make sure the control arm, anchor bracket and wear items are in good working order to assure the adjuster will operate as designed.

19. If automatic adjustment stops, can I operate as a manual brake adjuster?

No. Completely check out foundation brake and adjuster to determine cause of problem. Repair or replace as needed to restore automatic adjustment.

Additional Information Available

Additional parts and service information on Haldex Automatic Brake Adjusters may be found in the following materials:

Service Information

Installation and Maintenance Wall Chart	L60047HBS
Installation Video	ABA10017
Service Manual (Truck/Trailer)	L30033HBS

Parts Information

Parts and Cross Reference Guide (Truck/Trailer) . . .	ABA10001
Supplemental Automatic Brake Adjuster Kits	ABA10007

These materials may be ordered by contacting your Customer Service Representative at 1-800-643-2374. Or, you may log in to our website www.hbsna.com with your customer password to place your order.

Notes

Notes

AGENDA

Haldex

Commercial Vehicle Systems

North American Sales Division
Haldex Brake Products Corporation
10707 N.W. Airworld Drive
Kansas City, MO 64153-1215
Phone: (816) 891-2470
Fax: (816) 880-9766

North American Sales Division
Haldex Limited
525 Southgate Drive, Unit 1
Guelph, Ontario CANADA N1G 3W6
Phone: (519) 826-7723
Fax: (519) 826-9497

www.hbsna.com

9/03 25M ART L30033

Bendix®

Service Data

SD-05-1269

Bendix® ASA-5™ Automatic Slack Adjuster

DESCRIPTION

The Bendix® ASA-5™ sure stroke automatic slack adjuster is designed for use on cam actuated drum brakes of the type in use on most highway vehicles. Like a manual slack adjuster, the ASA-5™ slack adjuster multiplies and transforms the linear force of the air actuator into a rotational force or torque which is used to apply the foundation brake. Additionally, the ASA-5™ slack adjuster automatically adjusts the clearance between the brake lining and drum to compensate for wear.

A variety of ASA-5™ slack adjuster configurations are offered including both straight arm and 5/8" yoke offset models. The ASA-5™ slack adjuster is offered in arm lengths of 5, 5-1/2 and 6 inches and worm gear splines to accommodate the standard 1-1/4" and 1-1/2", SAE 10C as well as the Rockwell 24 and 28 tooth and Propar 37 tooth splines.

Either of two yoke designs (easy-on and quick connect) in combination with an external manual adjuster hex provides convenient installation and maintenance of the ASA-5™ slack adjuster.

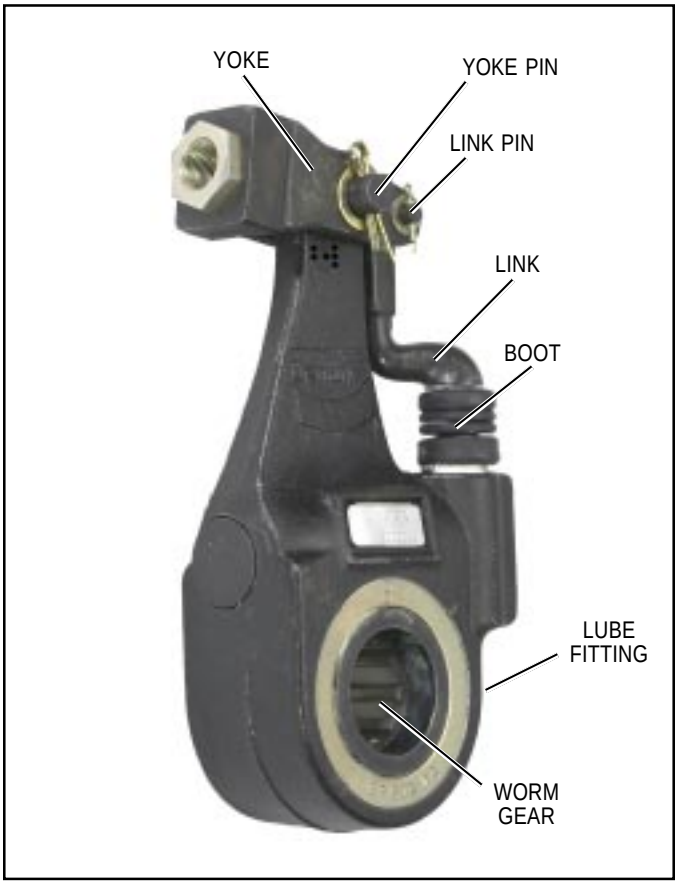

*FIGURE 1 - **ASA-5™ AUTOMATIC SLACK ADJUSTER***

OPERATION

GENERAL

The automatic adjustment provided by the Bendix® ASA-5™ slack adjuster results in consistent brake lining to drum clearance and brake actuator stroke. The key to its operation is the ability to complete the brake adjustment during the early part of each brake application and to cease adjusting as resistance to brake cam rotation begins to build. This aspect of the adjuster mechanism's operation prevents over-adjustment due to: lining compression, actuator bracket deflection, drum and foundation brake component distortion, or brake component wear.

The ASA-5™ slack adjuster incorporates a clutch-type adjuster mechanism that continuously adjusts in very small increments as lining and drum wear occurs. The adjustments made by the ASA-5™ slack adjuster are, therefore, not in specific increments relative to actuator stroke.

APPLICATION

When the brakes are applied, the linear travel of the brake actuator's push rod causes the ASA-5™ slack adjuster to rotate the foundation brake camshaft which in turn begins to force the brake shoes into contact with the drum. When the ASA-5™ slack adjuster rotates, the yoke assembly pivots on the yoke pin causing the link to be pulled upward.

The "teeth" on the link mesh with the adjuster mechanism pinion and as the link is pulled it travels first through its free play and then the pinion is rotated. Rotation of the pinion is transmitted through the clutch spring to the worm and shaft. Worm and shaft rotation results in worm gear rotation which in turn adjusts (or repositions) the brake camshaft.

When the foundation brake shoes contact the drum, the camshaft begins to resist rotation and friction between the worm gear and worm builds, preventing further rotation of the worm. Brake adjustment ceases at this point and further rotation of the ASA-5™ slack adjuster will cause the pinion and clutch spring to slip. The "free play" between the link teeth and pinion results in a predetermined lining to drum clearance.

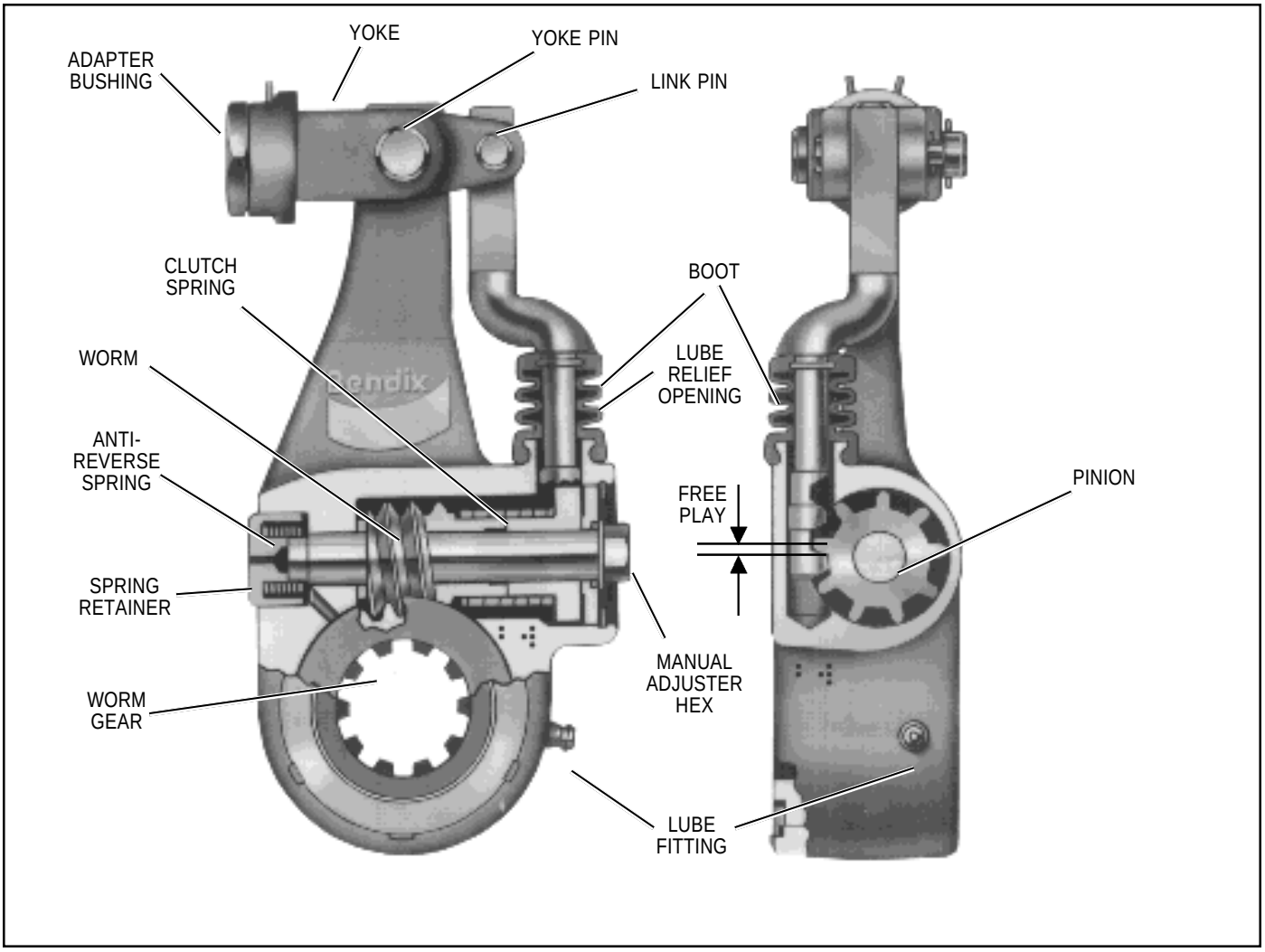

FIGURE 2 - ***SECTIONAL VIEW OF PROFILE AND END***

RELEASE

When the brake application is released, the brake actuator push rod returns the ASA-5™ slack adjuster to the released position. During release, the ASA-5™ slack adjuster rotates back toward the actuator causing the brake camshaft to again rotate, but in the opposite direction, and the brake shoes begin to move away from the drum. As the ASA-5™ slack adjuster rotates back to the release position the yoke again pivots causing the link to be pushed downward into the slack adjuster body. The “free play” between the link teeth and pinion is taken up during the initial part of the release. Continued movement of the ASA-5™ slack adjuster toward the released position causes the link to rotate the pinion. The anti-reverse spring prevents counterclockwise rotation of the shaft and worm causing the pinion and clutch spring to slip. The gripping action of the anti-reverse spring and slippage of the clutch spring during release is due to the direction of the coil windings of each.

YOKE DESIGNS

ASA-5™ slack adjusters may be equipped with either of two yoke designs. Both are designed to permit installation or removal of the slack adjuster along with its yoke body and its attached adjusting linkage.

The brake actuator push rod must thread into the adapter a minimum of 1/2 inch and must not extend more than 7/64 inch beyond the other end of the adapter. The yoke adapters (quick connect & easy-on) have either a 1 or 1-1/4 inch hex to allow tightening of the brake actuator push rod jam nut.

EASY-ON YOKE (REFER TO FIGURE 3)

The easy-on yoke assembly consists of an adapter which is threaded internally to match the push rod threads and externally to match female threads in the yoke. A special extended yoke adapter is also available as a separate service item. The extended adapter is 1/2 inch longer than the standard and is primarily intended for use when the existing brake actuator push rod is too short.

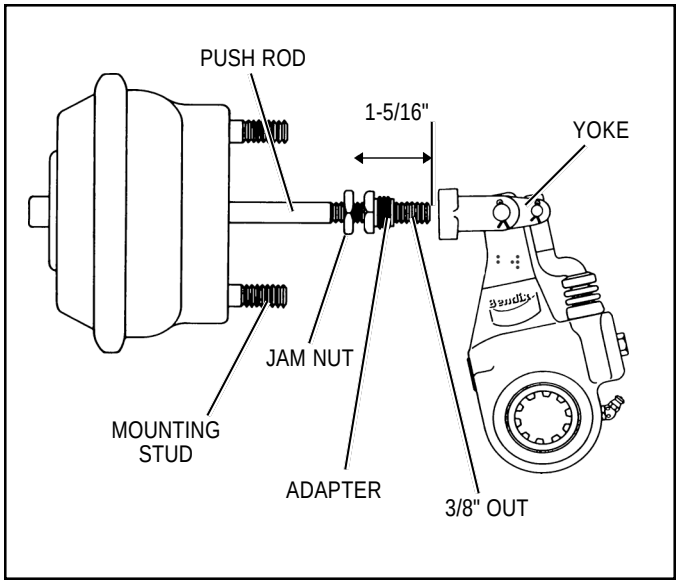

*FIGURE 3 - **EASY-ON YOKE ASSEMBLY***

QUICK-CONNECT YOKE

The adapter bushing in this case is threaded internally to match the push rod, but is designed to slide into the yoke. A retainer ring is used to secure the adapter bushing in the yoke. (Refer to Figure 4)

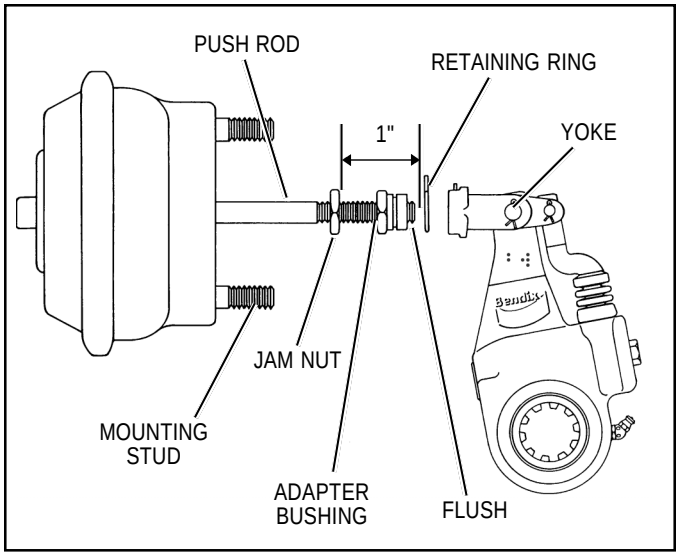

*FIGURE 4 - **QUICK-CONNECT YOKE ASSEMBLY***

WARNING! PLEASE READ AND FOLLOW THESE INSTRUCTIONS TO AVOID PERSONAL INJURY OR DEATH:

When working on or around a vehicle, the following general precautions should be observed at all times.

1. **Park the vehicle on a level surface, apply the parking brakes, and always block the wheels. Always wear safety glasses.**
2. **Stop the engine and remove ignition key when working under or around the vehicle. When working in the engine compartment, the engine should be shut off and the ignition key should be removed. Where circumstances require that the engine be in operation, EXTREME CAUTION should be used to prevent personal injury resulting from contact with moving, rotating, leaking, heated or electrically charged components.**
3. **Do not attempt to install, remove, disassemble or assemble a component until you have read and thoroughly understand the recommended procedures. Use only the proper tools and observe all precautions pertaining to use of those tools.**
4. **If the work is being performed on the vehicle's air brake system, or any auxiliary pressurized air systems, make certain to drain the air pressure from all reservoirs before beginning ANY work on the vehicle. If the vehicle is equipped with an AD-IS™ air dryer system or a dryer reservoir module, be sure to drain the purge reservoir.**
5. **Following the vehicle manufacturer's recommended procedures, deactivate the electrical system in a manner that safely removes all electrical power from the vehicle.**
6. **Never exceed manufacturer's recommended pressures.**
7. **Never connect or disconnect a hose or line containing pressure; it may whip. Never remove a component or plug unless you are certain all system pressure has been depleted.**
8. **Use only genuine Bendix® replacement parts, components and kits. Replacement hardware, tubing, hose, fittings, etc. must be of equivalent size, type and strength as original equipment and be designed specifically for such applications and systems.**
9. **Components with stripped threads or damaged parts should be replaced rather than repaired. Do not attempt repairs requiring machining or welding unless specifically stated and approved by the vehicle and component manufacturer.**
10. **Prior to returning the vehicle to service, make certain all components and systems are restored to their proper operating condition.**

INITIAL INSTALLATION PREPARATION

1. If necessary, remove the manual or automatic slack adjuster currently installed, including the brake chamber yoke assembly.
2. Before mounting the ASA-5™ slack adjuster on the camshaft, check the brake chamber push rod length to determine whether shortening or replacement is required. To accomplish this:
   A. With the brake chamber in the released position, place a square (or equivalent object) so that one edge is parallel to the actuator push rod while the other edge bisects the brake camshaft. Measure the distance from the push rod end to the vertical edge of the square and compare it to the values in Figure 5.

B. If the measurement is less than the minimum shown in Figure 5, the brake actuator push rod must be shortened. If the measurement is greater than the maximum values, the brake actuator push rod may require replacement. The extended adapter, available as a separate service part (5/18-18 pc. no. 297700 and 1/2-20 pc. no. 297701) may avoid the need to replace the brake actuator push rod. The extended adapter is available for the easy-on yoke assembly only.

3. Inspect the foundation brake, brake chamber and related components. Make certain the camshaft bushings and seals are not excessively worn. Lubricate the camshaft bushings. Check the brake chamber bracket for cracks and excessive corrosion. The brake actuator push rod should not be loose or bent and the return spring should be firm. Replace parts that are suspect.
4. Wire brush the foundation brake camshaft to loosen contamination and wipe clean. Depending on environmental conditions, an application of anti-seize compound to both the camshaft and worm gear spline may facilitate later slack removal.

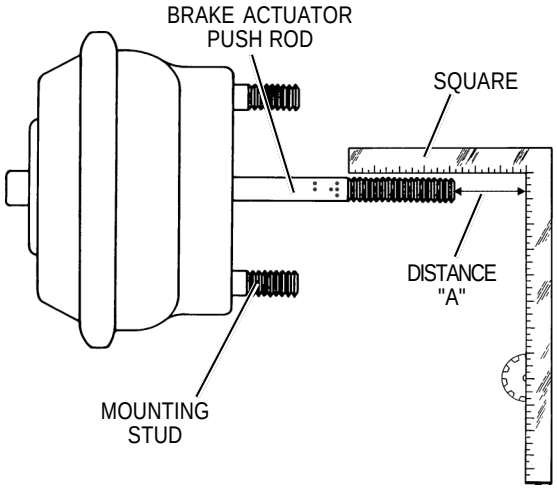

SLACK ADJUSTER ARM LENGTH	"A" STD. QUICK CONNECT OR EASY-ON ADAPTER	"A" EXTENDED EASY-ON ADAPTER
5"	1-15/16" - 3-1/32"	2-7/16" - 3-17/32"
5-1/2"	1-15/16" - 3-3/16"	2-7/16" - 3 11/16"
6"	1-3/16" - 3-3/16"	1-11/16" - 3-11/16"

*FIGURE 5 - **MEASURING THE BRAKE ACTUATOR PUSH ROD***

INSTALLATION

1. Select the proper ASA-5™ slack adjuster.
2. Install the ASA-5™ slack adjuster on the brake camshaft.
3. If the ASA-5™ slack adjuster has the easy-on yoke (see Figure 3), position the brake actuator push rod jam nut approximately 1-5/16 inches from the end of the brake actuator push rod. Thread the easy-on yoke adapter on the brake actuator push rod until it is approximately 3/8 inch from the end of the brake actuator push rod end. Turn the ASA-5™ slack adjuster manual adjustment hex clockwise until the adapter extends into the threaded bore of the yoke approximately 1/8 inch. Thread the adapter into the yoke and tighten to 10 foot pounds.

   The installation angle of a properly installed ASA-5™ slack adjuster:

Slack Adjuster Arm Length	Angle
5"	99°-113°
5.5"	98°-111°
6"	90°-109°

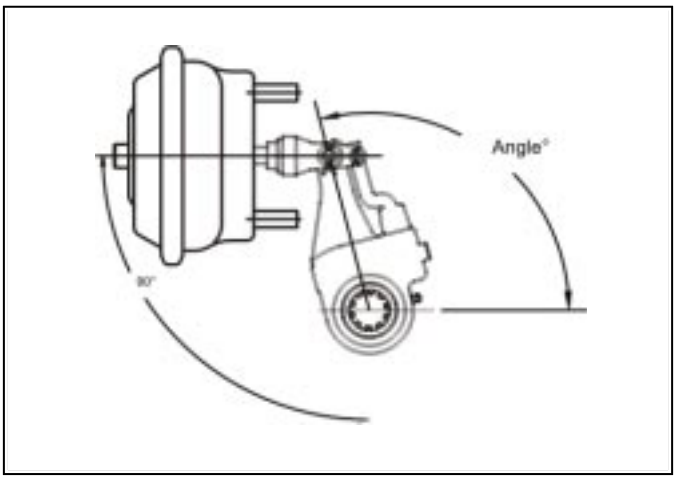

INSTALLATION ANGLE

4. If the ASA-5™ slack adjuster has the quick connect yoke (see Figure 4), position the brake actuator push rod jam nut approximately 1 inch from the end of the brake actuator push rod. Thread the quick connect adapter bushing on the brake actuator push rod until it is flush with the end of the brake actuator push rod. Install the retaining ring on the adapter bushing, making certain it is in the adapter bushing groove. Turn the ASA-5™ slack adjuster manual adjustment hex clockwise until the adapter bushing begins to enter the yoke. Fully compress the retaining ring “legs” and continue turning the ASA-5™ slack adjuster manual adjustment hex until the adapter bushing is completely in the yoke.

   Allow the retaining ring to expand into the corresponding groove in the yoke. Make certain the retaining ring is seated in both the yoke and the adapter bushing groove by manually pulling the ASA-5™ slack adjuster arm, attempting to separate the adapter bushing and yoke.

5. Run the brake actuator push rod jam nut down against the adapter or adapter bushing. Hold the adapter or adapter bushing hex with a wrench and tighten the jam nut to 300-400 inch pounds for the 1/2"-20 thread and 400-600 inch pounds for the 5/8"-18 thread.
6. Manually adjust the brakes.

Note: The vehicle brakes should be adjusted using the vehicle or brake manufacturer's recommendation. If they are not available, the following procedure can be used:

BRAKE ADJUSTMENT

Rotate the manual adjustment hex clockwise until the linings are snug against the drum. Turn the adjustment hex counterclockwise 1/4 turn. Pull the actuator push rod to confirm that approximately 1/2 inch of push rod free stroke exists. Apply 85 psi and check that the push rod stroke is below the readjustment Limit. If the stroke exceeds the readjustment limit, check the condition of the foundation brake. Refer to *Brake Maintenance Inspection*.

7. Manually uncage the spring brakes before returning the vehicle to service.
8. With the ASA-5™ slack adjuster installed, check to ensure clearance requirements with the brake fully released and at the actuator's maximum stroke. Also consider clearances with the vehicle suspension springs depressed to the jounce bumpers, as well as in rebound.

PREVENTIVE MAINTENANCE

Important: Review the Bendix Warranty Policy before performing any intrusive maintenance procedures. A warranty may be voided if intrusive maintenance is performed during the warranty period.

No two vehicles operate under identical conditions, as a result, maintenance intervals may vary. Experience is a valuable guide in determining the best maintenance interval for air brake system components. At a minimum, the ASA-5™ slack adjuster should be inspected every 6 months or 1500 operating hours, whichever comes first, for proper operation. Should the ASA-5™ slack adjuster not meet the elements of the operational tests noted in this document, further investigation and service of the adjuster may be required.

Visually check for physical damage such as broken air lines and broken or missing parts.

Every 25,000 miles, or 3 months, or 500 operating hours or at the time of routine vehicle chassis lubrication, whichever occurs first, the following steps should be followed (Also observe any shorter brake adjustment inspections or maintenance intervals specified by the vehicle manufacturer):

1. Lubricate the automatic slack adjuster through the lube fitting with a quality multipurpose chassis lubricant (N.L.G.I. Grade 1 or 2).

   Lubricate the slack adjuster until clean lubricant flows from the grease relief opening in the boot.
2. Perform the *In Service Inspection* described in this manual.

IN SERVICE INSPECTION

1. Apply and release the vehicle brakes several times while observing the ASA-5™ slack adjuster. The ASA-5™ slack adjuster and brake actuator should move freely without binding or interference and should return to the full released position. Observe the looseness that exists between the yoke and adapter bushing and the yoke and link pins and their mating parts (yoke, body, link). Replace these parts if looseness appears excessive. Make certain the brake actuator push rod jam nut is tight against the yoke adapter.
2. Inspect the ASA-5™ slack adjuster for physical damage paying particular attention to the link, boot and yoke. Inspect for bent, broken, loose or misaligned brake actuator push rods and cracked or damaged brake actuator brackets. Repair or replace any components found to be damaged.
3. Measure the brake actuator push rod stroke while making an 80-90 psi service brake application. Actuator push rod strokes should not exceed the values shown in the following actuator stroke tables. The correct pressure for this test can be achieved as follows. Build the system pressure up to 100 psi reading on the vehicle gage. Shut the engine off. Fan the brakes to attain a 90-95 psi reading. Make and hold a full brake application while the strokes are checked.

STANDARD STROKE ACTUATOR STROKE TABLE

Brake Actuator Size	Recommended Maximum Operating Stroke
30	2"
24	1-3/4"
20	1-3/4"
16	1-3/4"
12	1-3/8"

LONG STROKE ACTUATOR STROKE TABLE

Brake Actuator Size	Recommended Maximum Operating Stroke
30LS	2-1/2"
24L	2"
24LS	2-1/2"
20L	2"
16L	2"

4. The Bendix® *SureStroke*™ indicator is also available as a visual stroke indicator. The *SureStroke*™ indicator is a metal bracketing system that bolts onto the brake chamber and allows drivers to check the indicator for operating stroke.

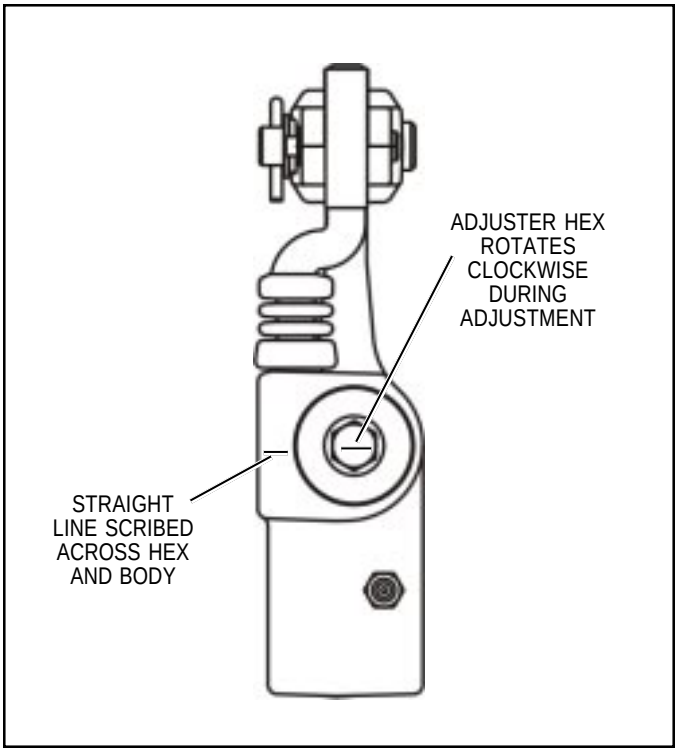

FIGURE 6 - ***TESTING ADJUSTER MECHANISM***

If the actuator stroke exceeds those shown, inspection of the foundation brake and/or the automatic slack should be completed. Maintenance of the foundation brake may be a factor in the long stroke conditions. Inspecting the foundation brake per the *Brake Maintenance Inspection* presented in this manual should determine how much of the long stroke condition is caused by the condition of the foundation brake. The ASA-5™ slack adjuster can be tested using the instructions presented in this manual under *Testing the ASA-5™ Adjuster Mechanism*.

TESTING THE ASA-5™ ADJUSTER MECHANISM

The following test can be made to determine if the ASA-5™ adjuster mechanism is functioning properly.

1. With the brakes released and the vehicle wheels blocked, de-adjust the brakes by rotating the manual adjustment hex counterclockwise approximately 1/2 to 1 revolution.

   Note: Considerable torque is required to rotate the manual adjustment hex counterclockwise and should be considered normal. The required torque may be as high as 70 foot pounds.
2. Using a straight edge, scribe a line across the manual adjustment hex head and slack adjuster body. (Refer to Figure 6).
3. Apply and COMPLETELY RELEASE the service brakes several times while observing the manual adjustment hex and the scribed line. The ASA-5™ slack adjuster manual adjustment hex should rotate clockwise during the application and remain stationary during release. No counterclockwise rotation of the hex should be observed. The amount of clockwise rotation (adjustment) will decrease progressively as the brake nears proper adjustment. If the ASA-5™ slack adjuster fails to perform as described, it will be necessary to repair or replace it.
4. Manually readjust the ASA-5™ slack adjuster being tested before returning the vehicle to service. (See section *Installation*, Step 6)

Note: While it is possible to use the automatic adjustment feature of the ASA-5™ slack adjuster to bring the brake back into adjustment, it will require numerous applications and COMPLETE RELEASES (the number of applications depends on how much the slack was de-adjusted).

BRAKE MAINTENANCE INSPECTION

The following test can be used to inspect the maintenance condition of the foundation brake and to determine how much of the chamber stroke is caused by the condition of the foundation brake.

1. Chock wheels to keep vehicle from moving.
2. Raise axle so wheel can be rotated.
3. Adjust slack adjuster to produce light brake drag with wheel rotation.
4. Apply brake to 80-90 psi and measure stroke (See Item 3 of *In Service Inspection* for pressure tips).
5. If stroke significantly exceeds the values shown in the chart, the brake may be out of the norm and brake maintenance may be required.

AL Factor	15"x4" Front Brake	16.5"x7" Tractor, Truck or Bus Brake	16.5"x7" Trailer Brake
12 X 5.0"	1/2"	N/A	N/A
12 X 5.5"	1/2"	N/A	N/A
16 X 5.0"	5/8"	1/2"	N/A
16 X 5.5"	3/4"	1/2"	N/A
16 X 6.0"	7/8"	5/8"	N/A
20 X 5.0"	5/8"	1/2"	3/8"
20 X 5.5"	3/4"	5/8"	1/2"
20 X 6.0"	7/8"	3/4"	5/8"
24 X 5.0"	N/A	5/8"	1/2"
24 X 5.5"	N/A	5/8"	5/8"
24 X 6.0"	N/A	3/4"	5/8"
30 X 5.0"	N/A	3/4"	5/8"
30 X 5.5"	N/A	7/8"	3/4"
30 X 6.0"	N/A	1"	7/8"

ASA-5™ SLACK ADJUSTER REMOVAL

Note: Make certain the vehicle has been prepared according to the instructions under the heading *WARNING! PLEASE READ*.

1. If the ASA-5™ slack adjuster is equipped with the easy-on yoke assembly illustrated in Figure 3:
   A. Loosen the brake actuator push rod jam nut and run it back on the brake actuator push rod approximately 5/8 inch.
   B. Loosen the easy-on yoke adapter and run it back on the brake actuator push rod until it is free of the yoke.
   C. Rotate the manual adjustment hex counterclockwise until the ASA-5™ slack adjuster is clear of the brake actuator push rod.

Note: Considerably more torque is required to rotate the manual adjustment hex counterclockwise than is necessary to rotate it clockwise. The torque may be as high as 70 foot pounds.

2. If the ASA-5™ slack adjuster is equipped with the quick-connect yoke assembly illustrated in Figure 4:
   A. Rotate the ASA-5™ slack adjuster's manual adjustment hex counter-clockwise until the brake actuator push rod just begins to move out of the actuator.
   B. Pinch the legs of the retaining ring together and pull the ASA-5™ slack adjuster away from the brake actuator push rod until the adapter bushing is free of the yoke. Remove the retaining ring from the adapter bushing.
   C. Rotate the manual adjustment hex counter clockwise until the ASA-5™ slack adjuster is clear of the brake actuator push rod.
3. Remove the ASA-5™ slack adjuster from the camshaft of the foundation brake by removing the retaining clip and any spacers or washers that may be present.

DISASSEMBLY

GENERAL

A reasonable level of cleanliness should be observed when working on the ASA-5™ slack adjuster. Clean the exterior before disassembly.

The following disassembly and assembly procedure is presented for reference purposes and presupposes that a rebuild or repair of the ASA-5™ slack adjuster is being undertaken. Several replacement parts and maintenance kits are available which do not require full disassembly. The instructions provided with these parts and kits should be followed in lieu of the instructions presented here.

1. Clamp the ASA-5™ slack adjuster ARM in a bench vise. Do not clamp across the portion of the body that contains the adjuster assembly or worm gear. Using a wire brush, thoroughly clean the exterior of the slack adjuster paying particular attention to the area around the manual adjustment hex and its retaining ring. Wipe all loose contaminants away before proceeding.
2. Remove the cotter pins and washers from the yoke pin and link pin.
3. Remove the yoke pin and link pin and separate the yoke from the ASA-5™ slack adjuster.
4. If the ASA-5™ slack adjuster has a yoke pin bushing, press it out of the slack adjuster arm.
5. No further disassembly of the ASA-5™ slack adjuster is permitted.

CLEANING AND INSPECTION

1. Inspect the worm gear camshaft splines for damage. If damaged, replace the ASA-5™ slack adjuster.
2. Clean and inspect the yoke pin and link pin holes in the yoke, adjuster link and slack adjuster body. The holes should be visually round with no perceptible “egg shaping.” A new yoke pin and link pin can be used to make this inspection. If this condition is noted, the affected part must be replaced.
3. Clean out the retaining ring grooves in the yoke.

REASSEMBLY

1. If the ASA-5™ slack adjuster uses a yoke pin bushing, press it into the slack adjuster arm.
2. Depending on environmental conditions an application of anti-seize compound to both the yoke and link pins may facilitate later removal. Install the yoke and secure it to the ASA-5™ slack adjuster body and link using the yoke pin and link pin. **Note:** Install the yoke and link pins from the direction as shown in Figure 7. Install washers and cotter pins in the yoke pin and link pin, and secure each. Bend each leg of the cotter pins to a minimum of 25 degrees, creating an included angle of at least 50 degrees between the legs.

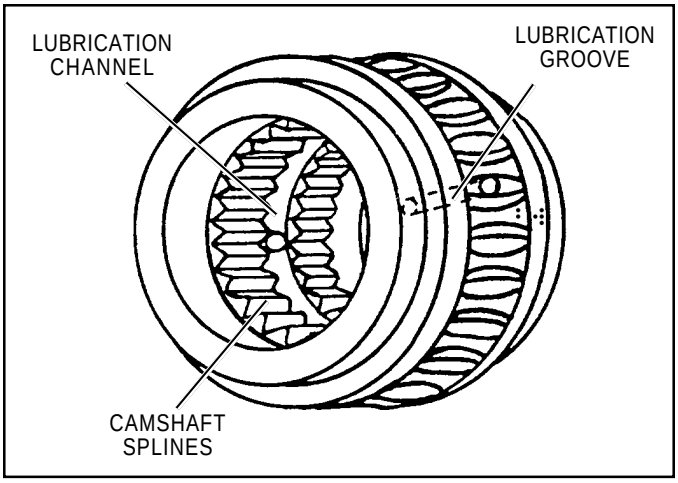

FIGURE 8 - ***WORM GEAR LUBRICATION***

3. Lubricate the automatic slack adjuster through the lube fitting with a quality multipurpose chassis lubricant (N.L.G.I. Grade 1 or 2). Lubricate the slack adjuster until clean lubricant flows from the grease relief opening in the boot.

   Note: This pre-installation lubrication on those ASA-5™ slack adjuster's equipped with a lubrication groove cut in the splines of the worm gear requires the temporary insertion of a "dummy camshaft spline" in the worm gear, or the lubrication of these units must be performed with the slack adjuster installed on the brake camshaft. (Refer to Figure 8.)

RETROFITTING THE ASA-5™ SLACK ADJUSTER

PREPARATION

The Bendix® ASA-5™ automatic slack adjuster can replace a manual slack or competitive automatic slack adjuster provided some considerations are kept in mind:

1. Excessive duty cycles, high application pressures and brake force compounding can result in reduced slack adjuster durability.
2. Determine that the AL factor of the vehicle to be retrofitted is 195 or less. To determine the AL factor multiply the slack adjuster arm length (from the center of the cam spline to the center of the yoke pin hole in use) times the brake chamber size. Example: a type 30 brake chamber connected to a 6 inch arm slack adjuster, A = 30 square inches, L = 6 inches; therefore, 30 x 6 = 180, AL factor.
3. Make sure the foundation brake components are in good condition. Excessive drum out-of roundness will result in excessive lining wear. See the *In Service Inspection* section contained in this manual.
4. In order to select the proper slack adjuster, choose an ASA-5™ slack adjuster with the same arm length, spline size, push rod thread size and offset as the slack adjuster it is replacing.
5. When retrofitting the Bendix® ASA-5™ slack adjuster, make certain to read the instructions packaged with all service replacement ASA-5™ slack adjusters.

ASA-5™ SLACK ADJUSTER TROUBLESHOOTING CHART

SYMPTOMS	CAUSE	REMEDY
1. Brake Actuator stroke is too long.	A. Loose actuator push rod jam nut.	A. Reposition components and torque to specification.
	B. Excessive clearance between adapter/adapter bushing and yoke due to wear.	B. Replace damaged or worn parts.
	C. Excessive clearance between components: yoke pin—yoke link pin—link yoke pin—body.	C. Replace worn parts.
	D. Damaged (worn) splines on slack or camshaft.	D. Replace damaged parts.
	E. Weak or broken brake actuator return springs. Weak or broken brake shoe return spring.	E. Replace weak or broken springs.
	F. Worn or broken foundation brake components, including camshaft bushings, brake chamber bracket, etc.	F. Repair or replace as required per *In Service Inspection.*
	G. ASA-5™ adjuster mechanism not functioning.	G. Lubricate, test adjuster mechanism, conduct in service inspection, repair components as necessary, replace.
	H. Brake drum—worn, excessively machined, bell-mouthed, excessive thermal expansion.	H. Replace or repair as required.
	I. Damaged ASA-5™ slack adjuster.	I. Replace component(s) or slack adjuster.
	J. ASA-5™ slack adjuster improperly installed.	J. Correct installation position.

ASA-5™ SLACK ADJUSTER TROUBLESHOOTING CHART (Continued)

SYMPTOMS	CAUSE	REMEDY
2. Brakes dragging—apparent overadjustment of brakes.	A. ASA-5™ slack adjuster improperly installed. Too close to actuator: brakes can't fully release.	A. Correct the ASA-5™ slack adjuster installation.
	B. Loose actuator push rod jam nut.	B. Reposition components and torque to specification.
	C. Spring brakes not fully retracting.	C. Check spring brake release air pressure and repair or replace air valving as necessary. Repair or replace spring brake.
	D. Broken foundation brake components, including camshaft bushings.	D. Repair or replace as required per *In Service Inspection*.
	E. Vehicle brake torque imbalance. (More work done by some brakes than others, thermal expansion of drums).	E. Check other brakes to insure they are working. Check air pressure balance and threshold pressure (refer to Bendix publication BW-1555). Check driver braking habits, e.g. use of trailer control valve. Use same friction material on all axles.
	F. Brake drum out-of-round, excessive thermal expansion.	F. Replace or repair as required.
	G. Air system malfunction, not exhausting completely.	G. Inspect and correct.
	H. New lining swells during break-in.	H. Back-off adjustment until brakes are free.

Bendix®

BW1602 © 2004 Bendix Commercial Vehicle Systems LLC. All rights reserved. 3/2004 Printed in U.S.A.

AGENDA

Air Brake Handbook

| Compressors | Valves | Wheel End Solutions | Air Treatment | Integrated Modules | Electronics |

Bendix

Bendix Spicer Foundation Brake LLC

A Bendix CVS and Dana Joint Venture

Typical Tractor System Schematic

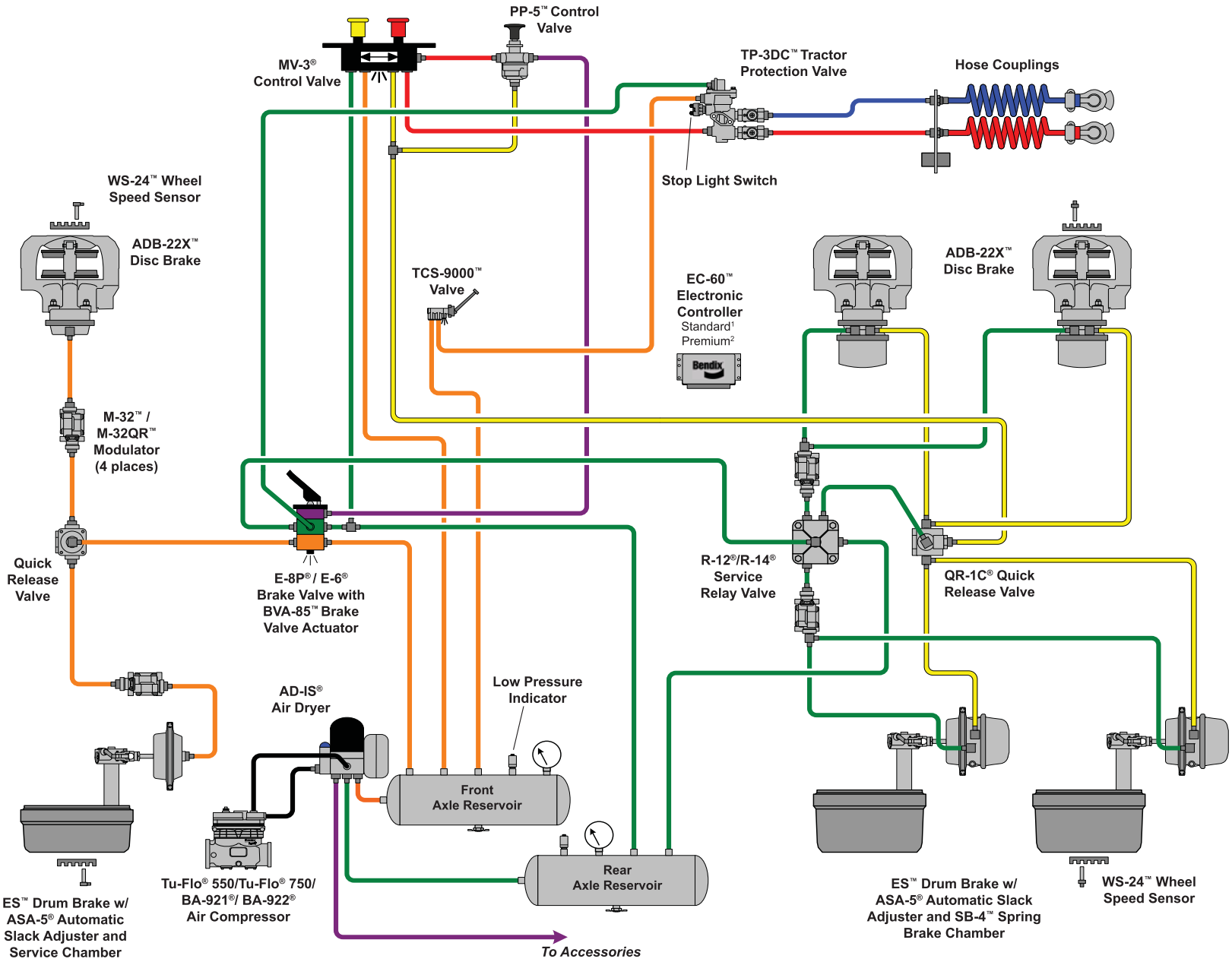

©2009 Bendix Commercial Vehicle Systems LLC • All Rights Reserved

AGENDA

The Air Brake Handbook

©2009 Bendix Commercial Vehicle Systems LLC • All Rights Reserved

More info: visit www.bendix.com 1-800-AIR-BRAKE (1-800-247-2725)

Alphabetic Device Index

A-18™ Controller Assy. 42
Actuators 17
AD-2® Air Dryer. 12
AD-4® Air Dryer. 12
AD-9® Air Dryer. 12
AD-IP® Air Dryer 12
AD-IS® Air Dryer Module 12
AD-SP® Air Dryer. 13
AF-3™ In-line Air Filter 13
Air Disc Brakes. 20
ASA-5® Automatic Slack Adjuster 18
BA-921® Air Compressor 8, 9
BA-922® Air Compressor 8-9
BASIC Test Kit 9
Bendix Modules 45
BP-R1® Bobtail Proportioning
Relay Valve 22
BVA-85™ Brake Valve Actuator. . 46
BX-2150™ Air Compressor 8
Converter Dolly Brakes. 33
Cyclone DuraDrain™ Trailer
Water Separator 13
D-2® Governor 10
DC-4® Double Check Valve . . . 14
DD3™ Safety Actuator 17
Dryer Reservoir Module 12
DS-2™ Double Check and Stop
Light Switch. 14
DuraFlo 596™ Air Compressor . 8, 9
E-10™ Brake Valve 15
E-10P™ Brake Valve 15
E-10PR™ Retarder Control
Brake Valve 15, 16
E-12™, E-15™ Brake Valves . . . 15
E-14™ Brake Valve 15
E-6® Brake Valve 15
E-7™ Brake Valve. 15
E-8P® Brake Valve 15
EC-30™ ABS/ATC Controller . . . 36
EC-60™ ABS/ATC Controller . . . 36
ESP® Functionality 39
EverFlow® Module 13
FD-3™ Fan Clutch 46
FD-I™ Fan Clutch 46
Inlet Check Valve. 10
Inlet Regulating Valve 10
LP-2™ and LP-3™ Low Pressure
Indicators 11
LQ-5™ Bobtail Ratio Valve 22
M-32™ and M-32QR™ Modulators 35
MC-30™ Controller Assy. 42
MV-3® Dash Control Module . . . 29
PE-4™ Control Valve 32
PP-1® and PP-2™ Valves 24
PP-1® Control Valve 34
PP-3™ Control Valve 24
PP-5™ Push-Pull Control Valve. . 27
PP-7™ Control Valve 24
PP-8™ Control Valve 24
PP-DC® Park Control Valve . . . 28
PR-3™ Reservoir Control Valve. . 34
PR-4™ Pressure Protection Valve 14
PuraGuard® QC Oil
Coalescing Filter 13
QR-1® Quick Release Valve . . . 21
QR-1C® Quick Release Valve . . 26
QR-L™ Quick Release Valve . . . 21
QRN-2™ Quick Release Valve . . 21
QRV™ Quick Release Valve . . . 21
R-12DC® Relay Valve 23
R-12P™ Relay Valve 23, 34
R-12® Relay Valve 23
R-14® Relay Valve 23
R-6™ Relay Valve. 23
R-7™ Modulating Valve 23
R-8P™ Relay Valve 23
R-8™ Relay Valve. 23
RD-3™ Control Valve 27
RDU™ (Remote Diagnostic Unit) . 44
RE-6NC™ Relay Emergency Valve 34
Reservoirs 11
RV-1™ Pressure Reducing Valve . 14
S-Cam Brakes 19
SB-1™ Spring Brake Actuator . . 17
SC-3™Single Check Valve 11
SC-PR™ Valve 13
SD3™ Roto Safety Actuator . . . 17
SDS-9600™ Trailer Suspension
Dump Valve 27
SL-4™ and SL-5™ Stop Lamp
Switches 26
Spring Brake Actuators. 17
SR-2™ Spring Brake Valve 31
SR-4™ Spring Brake Valve 31
SR-5™ Spring Brake Valve 31
SRC-7000™ Trailer
Spring Brake Valve. 31
ST-1™, ST- 3™ and ST-4™
Safety Valves. 10
SureStroke™ Indicator 18
SV-1™ Synchro Valve. 27, 34
SV-4™ Trailer Release Valve . . . 34
System-Guard® Trailer Air Dryer . 13
TABS-6 Trailer ABS 41
TABS-6 Advanced Trailer ABS . . 41
TABS-6 Advanced MC Trailer ABS 41
TC-2™ Trailer Control Valve . . . 29
TC-6™ Trailer Control Valve . . . 29
TE-1™ Trailer Emergency
Stop Light 32
TP-3® Tractor Protection Valve. . 30
TP-3DC™ Tractor Protection Valve 30
TP-4™ Tractor Protection Valve . 30
TP-5™ Tractor Protection Valve . 30
TR-3™ Valve 27
Trailer Control (TC) Valves. . . . 29
Tu-Flo® 550 Air Compressor . . . 8, 9
Tu-Flo® 750 Air Compressor . . . 8, 9
TW-1™, TW-3™ and TW-6™
Control Valves 26
TW-11™ Valve 26
WS-24™ Wheel Speed Sensors . 35
Yaw Stability 39

How to use the Air Brake Handbook

This nine-section handbook provides an introduction to the use and operation of Bendix air brake systems and devices.

Components are introduced and shown with typical system diagrams to show where they are used. As new components are introduced and their function explained, they gradually build up to a complete functioning air brake system.

Partial system-drawings, throughout the manual, assist in explaining of the use of the components. See the front inside cover and the fold-out back cover for examples of vehicle system schematics.

Contents

Device Index 2
General Precautions 4
Section 1: An Overview 5
Overview 5
Section 2: The Charging System 6-14
Compressors 7-9
Compressor Maintenance Guidelines 9
Governors and Components 10
Reservoirs and Components 11
Air Dryers 12-13
Additional Charging System Related Components 14
Section 3: The Control System 15-27
Dual Circuit Brake Valves 15-16
Actuators 17
Slack Adjusters 18
Foundation Brakes: S-Cam and Air Disc 19-20
Quick Release, Ratio Valves 21
Ratio, Proportioning Valves 22
Relay Valves 23
Push-Pull Valves 24
Spring Brake Valves 25
Lever Operated Control Valves 26
Additional Control Valves 26-27
Section 4: Tractor Parking, Trailer Charging/Parking and Emergency Systems 28-32
Park Control Valves 28
Dash Control Modules 29
Trailer Control Valves 29
Tractor Protection Valves 30
Trailer Spring Brake Valves 31-32
Section 5: Converter Dolly Brakes 33-34
Trailer/Converter Dolly Brakes 33-34
Section 6: Antilock Braking Systems 35-
Introduction 35
ABS Components 35-36
Truck and Tractor ABS Operation 36-37
ATC Operation 37
Advanced ABS Operation, Features 38-40
Trailer ABS Components and Operation 41-43
Troubleshooting Truck, Tractor and Trailer ABS . . . 44-45
Section 7:
Additional Systems and Components 46-47
Adaptive Cruise Control 46
Tire Pressure Monitoring Systems 46
Modules 47
Section 8: The Fundamentals of Air Braking 48-58
Friction, Braking Force 48-49
Leverage 50-51
Deceleration 51-52
Compressed Air 53-55
Compressed Air Brakes 55-56
S-Cam and Air Disc Brakes 56
Air Brake System Balance: Pneumatic Systems 57
Air Brake System Balance: Mechanical Systems 58
Section 9:
Air Brake System Troubleshooting Tests 59-62

Bendix Literature 63
About Bendix 64

Front Inside . . . . . Typical Tractor System Schematic
Back Inside . . . . . Typical Truck System Schematic
Fold-in Back . . Typical Tractor System with ESP® Stability
Fold-out Back . . Typical Truck System with ESP® Stability

DIN symbols are used in this handbook.

IMPORTANT

The systems presented in this manual are intended for illustrative purposes only and are not intended to be used for actual vehicle piping.

Air Brake System General Precautions

WARNING! PLEASE READ AND FOLLOW THESE INSTRUCTIONS TO AVOID PERSONAL INJURY OR DEATH:

When working on or around a vehicle, the following general precautions should be observed at all times.

1. Park the vehicle on a level surface, apply the parking brakes, and always block the wheels. Always wear safety glasses.
2. Stop the engine and remove ignition key when working under or around the vehicle. When working in the engine compartment, the engine should be shut off and the ignition key should be removed. Where circumstances require that the engine be in operation, EXTREME CAUTION should be used to prevent personal injury resulting from contact with moving, rotating, leaking, heated or electrically charged components.
3. Do not attempt to install, remove, disassemble or assemble a component until you have read and thoroughly understand the recommended procedures. Use only the proper tools and observe all precautions pertaining to use of those tools.
4. If the work is being performed on the vehicle's air brake system, or any auxiliary pressurized air systems, make certain to drain the air pressure from all reservoirs before beginning ANY work on the vehicle. If the vehicle is equipped with an AD-IS® air dryer system or a dryer reservoir module, be sure to drain the purge reservoir.
5. Following the vehicle manufacturer's recommended procedures, deactivate the electrical system in a manner that safely removes all electrical power from the vehicle.
6. Never exceed manufacturer's recommended pressures.
7. Never connect or disconnect a hose or line containing pressure; it may whip. Never remove a component or plug unless you are certain all system pressure has been depleted.
8. Use only genuine Bendix® replacement parts, components and kits. Replacement hardware, tubing, hose, fittings, etc. must be of equivalent size, type and strength as original equipment and be designed specifically for such applications and systems.
9. Components with stripped threads or damaged parts should be replaced rather than repaired. Do not attempt repairs requiring machining or welding unless specifically stated and approved by the vehicle and component manufacturer.
10. Prior to returning the vehicle to service, make certain all components and systems are restored to their proper operating condition.
11. For vehicles with Antilock Traction Control (ATC), the ATC function must be disabled (ATC indicator lamp should be ON) prior to performing any vehicle maintenance where one or more wheels on a drive axle are lifted off the ground and moving.

Section 1: An Overview

Air Supply

The vehicle's compressor takes in filtered air, either at atmospheric pressure from the outside or already at an increased pressure (e.g. from the engine turbocharger), and compresses it. The compressed air is delivered to the air dryer where water and a small amount of oil is removed. The air then travels into the air reservoirs ("air tanks") - typically delivered to a rear brake system reservoir and a front brake system reservoir as well as any attached trailer reservoirs. For each system, the air pressurizes the reservoir and the air hoses all the way to the next control valve, where the air pressure remains, ready to be used.

A vehicle may use compressed air for many tasks. Some examples are: to provide force for braking, to deliver air to a particular component, to off-load bulk goods, etc.

Normal Braking

When the driver applies the foot brake, a plunger within the foot brake valve moves, opening channels within the valve that allow the air pressure waiting there to pass through and be delivered to the rear and front brake systems. The pressure quickly increases in the brake chambers and applies force to the push rod, transferring the force to the S-Cam or air disc brake. (See page 19 for more about foundation brakes.) Frictional forces slow the wheels and the vehicle comes to a stop. When the brakes are released, the air in the brake chambers is able to be quickly released and enable the vehicle to drive away.

Vehicle Parking

Vehicles are parked using powerful springs, which are part of the spring brake assembly, to engage the brakes and hold the vehicle in position. When the driver prepares to move away and releases the parking brake, the spring force is countered by the introduction of air pressure. An anti-compounding valve in the system design helps prevent the application of both the spring and service brakes together.

Antilock Braking Systems (ABS)

Most commercial vehicles use electronic Antilock Braking System (ABS) to help improve braking when excessive wheel slip, or wheel lock-up, is detected. Bendix® Electronic Control Units (ECUs) use patented technology to monitor wheel speeds (on all wheels equipped with speed sensors) and use ABS modulator valves to adjust or pulse the braking force being applied. These valves operate many times per second during an ABS event. ABS typically improves stability and steerability, and also reduces stopping distances on most surfaces.

In addition to the ABS features above, some advanced ECUs have a drag torque control feature which reduces driven-axle wheel slip (due to driveline inertia) by communicating with the engine's controller and increasing the engine torque.

Antilock Traction Control

In addition to the ABS function, some Bendix ECU models provide an Automatic Traction Control (ATC) feature which can help improve vehicle stability and traction during vehicle acceleration at low speeds.

Electronic Stability Program

The ESP®* functionality of the Bendix Advanced ABS system responds to a wide range of low- to high-friction surface scenarios including rollover, jackknife and loss of control. It is the recommended system for all power vehicles and especially critical for tractors pulling trailers.

In the case of vehicle slide (over-steer or under-steer situations), the system will remove the throttle and then brake one or more of the "four corners of vehicle" (in addition to potentially braking the trailer), thus applying a counter-force to better align the vehicle with an appropriate path of travel. For example, in an over-steer situation, the system applies the "outside" front brake; while in an under-steer situation, the "inside" rear brake is applied.

In the case of a potential roll event, the system will remove the throttle and quickly apply the brakes to slow the vehicle combination below the threshold.

Adaptive Cruise & Braking (ACB)

The Bendix® Wingman™ ACB system provides cruise control and a monitoring system to assist and/or alert the driver. In addition, ACB tracks the vehicles ahead and helps maintain a pre-set following interval. The technology builds on the Bendix® ESP® stability system.

Emergency Braking

In emergency situations where system air pressure is reduced or lost, government regulations require vehicles to meet specified stopping distances. As an example, some straight truck system designs use modulated parking-brake applications to bring the vehicle to a stop.

*ESP is a registered trademark of Daimler and is used by BCVS under license.

Section 2: The Charging System

The charging system consists of:

- An **air compressor,** to pressurize the system
- A **governor**, to control when the compressor needs to build, or stop building, air for the system and also to control the air dryer purge cycle
- An **air dryer,** to remove water and oil droplets from the air
- **Reservoirs** (or "air tanks") to store air to be used for vehicle braking, etc.
- Safety valves to protect against excessive pressure in the system in the event that a charging system component malfunction occurs, e.g. a line blockage
- **Single check valves** to maintain a one-way flow of air into the reservoirs. This arrangement protects the contents from being drained in the event of an upstream loss of pressure
- **Low pressure indicators** to alert the driver whenever a reservoir has less than a pre-set amount of air available

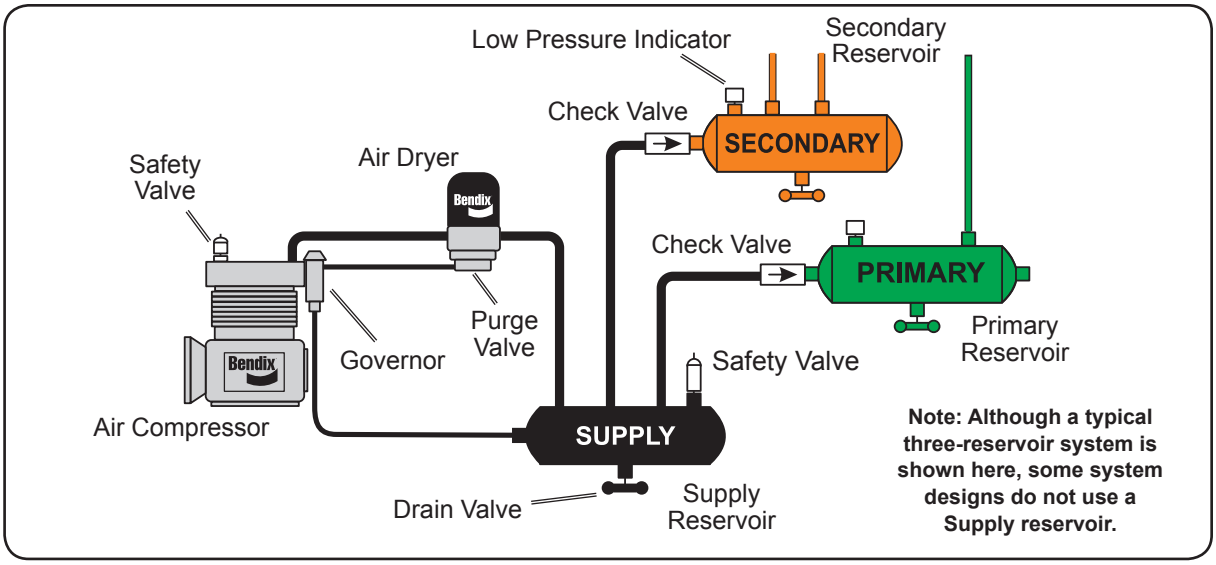

Bendix Air Compressors

The air compressor is the source of energy for the air brake system.

Usually driven by the vehicle engine, the air compressor builds the air pressure for the air brake system. The air compressor is typically cooled by the engine coolant system and lubricated by the engine oil supply. (Certain models have self-lubricated and/or air-cooled versions available.) Note: Air compressor shafts can rotate in either direction.

The vehicle's compressor draws in filtered air, either at atmospheric pressure from the outside (or already at an increased pressure from the engine turbocharger where permitted), and compresses it until system pressure is achieved.

The brake system needs a supply of compressed air between a preset maximum and minimum. The governor (along with a synchro valve for certain Bendix® air compressors) monitors the air pressure in the supply reservoir and controls when the compressor needs to pump air into the air system (also known as the "air build cycle" - the compressor is "running loaded") and when the compressor can simply turn over without building pressure ("running unloaded"). When the air pressure becomes greater than that of the preset "cut-out", the governor controls the unloader mechanism of the compressor, stops the compressor from building air, and causes the air dryer to purge. As the service reservoir air pressure drops to the "cut-in" setting of the governor, the governor returns the compressor back to building air and cycles the air dryer back to air drying mode.

As the atmospheric air is compressed, all the water vapor originally in the air is carried along into the air system (as well as a small amount of the compressor lubricating oil) as vapor.

The **Duty Cycle** is the ratio of time the compressor spends building air, relative to the total engine running time. Air compressors are designed to build air (run "loaded") up to 25% of the time. Higher duty cycles cause conditions (such as higher compressor head temperatures) that may adversely affect air brake charging system performance. These conditions may require additional maintenance due to a higher amount of oil vapor droplets being passed along into the air brake system. Factors that add to the duty cycle are: air suspension, additional air accessories, use of an undersized compressor, frequent stops, excessive leakage from fittings, connections, lines, chambers or valves, etc. See page 9 for compressor maintenance and usage guidelines. Use the Bendix® BASIC test (p/n 5013711) where the amount of oil present in the air brake system is suspected to be above normal.

The discharge line allows the air, water-vapor and oil-vapor mixture to cool between the compressor and air dryer. The typical size of a vehicle's discharge line, (see table on page 9) assumes a compressor with a normal (less than 25%) duty cycle, operating in a temperate climate. See Bendix and/or vehicle or air dryer manufacturer guidelines as needed.

Air dryer inlet temperatures play a key role in air system cleanliness and air dryer performance. When the temperature of the compressed air that enters the air dryer is within the normal range, the air dryer can remove most of the charging system oil. If the temperature of the compressed air is above the normal range, oil as oil-vapor is able to pass through the air dryer and into the air system. Larger diameter discharge lines and/or longer discharge line lengths can help reduce the temperature.

The discharge line must maintain a constant slope down from the compressor to the air dryer inlet fitting to avoid low points where ice may form and block the flow. If, instead, ice blockages occur at the air dryer inlet, insulation may be added here, or if the inlet fitting is a typical 90 degree fitting, it may be changed to a straight or 45 degree fitting to prevent moisture build-up and freezing. For more information on how to help prevent discharge line freeze-ups, see Bendix Bulletins TCH-08-21 and TCH-08-22. Conversely, shorter discharge line lengths or insulation may be required in extreme cold climates to maintain proper dryer operation.

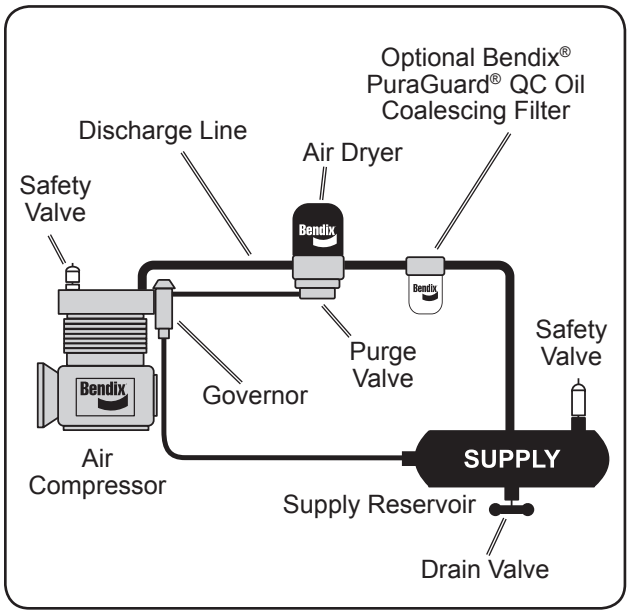

The air dryer contains a filter that collects oil droplets, and a desiccant bed that removes almost all of the remaining water vapor before the compressed air is passed to the air brake service (supply) reservoir. The oil droplets and the water collected are automatically purged at the dryer when the governor reaches its "cut-out" setting.

For vehicles with accessories that are sensitive to small amounts of oil, we recommend installation, downstream of the air dryer, of a Bendix® PuraGuard® QC oil coalescing filter to further minimize the amount of oil present.

See the Bendix Advanced Compressor Trouble-shooting Guide (BW1971) or the compressor's Service Data sheet, available online at www.bendix.com for more information.

Compressors

Bendix

Single-Cylinder Compressors

BX-2150™ air compressor

BA-921® air compressor

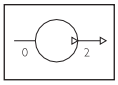

Two-Cylinder Compressors

Tu-Flo® 700 air compressor

Tu-Flo® 501 air compressor

Tu-Flo® 500 air compressor

Tu-Flo® 400 air compressor

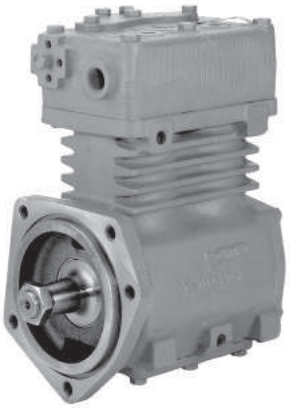

Tu-Flo® 550 air compressor or Tu-Flo® 750 air compressor (exterior view is the same)

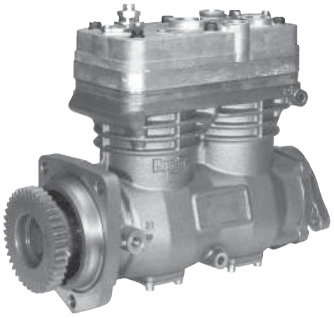

BA-922® air compressor (shown) or DuraFlo 596™ air compressor (exterior view is very similar)

Compressor Comparison by Displacement

	Displacement CFM at 12500 RPM	Cylinders	Engine / self-lubricated avail.?	Water / air-cooled available?	Turbo inlet option?
Tu-Flo® 400 Compressor	7.25	2	Both	Both	Y
BX-2150™ Compressor	9.5	1	Eng.	Water	Y**
Tu-Flo® 500 Compressor	12	2	Eng.	Water	Y
Tu-Flo® 501 Compressor	12	2	Both	Both	Y
Tu-Flo® 550 Compressor	13.2	2	Eng.	Water	Y
Tu-Flo® 700 Compressor	15.5	2	Eng.	Water	Y
BA-921® Compressor	15.8	1	Eng.	Water	Y**
Tu-Flo® 750 Compressor	16.5	2	Eng.	Water	Y
Tu-Flo® 1000 Compressor*	24	4	Both	Both	Y
DuraFlo 596™ Compressor	27	2	Eng.	Water	N
BA-922® Compressor	31.6	2	Eng.	Water	N
Tu-Flo® 1400 Compressor*	32	4	Eng.	Water	Y***

*Special use. e.g. Tank trailer pump-off

**Uses Inlet Check Valve

***Uses an Inlet Regulating Valve

Four-Cylinder Compressors

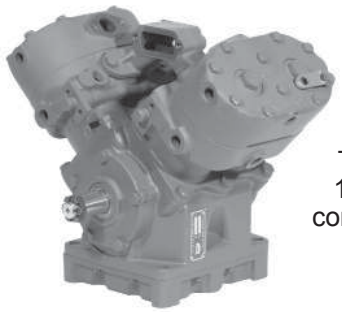

Tu-Flo® 1000 air compressor

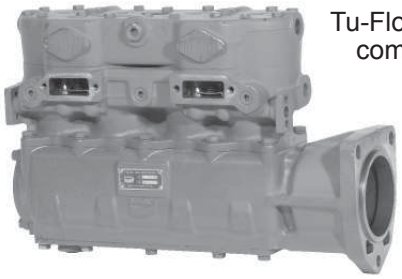

Tu-Flo® 1400 air compressor

For compressor Service Data Sheets, visit www.bendix.com

Maintenance Schedule and Usage Guidelines

Regularly scheduled maintenance is the single most important factor in maintaining the air brake charging system. The table below is an introduction to the maintenance intervals for air brake charging systems. See your compressor and/or air dryer Service Data sheet for more information.

If you are concerned that a compressor may be passing oil, use the Bendix® BASIC Test Kit: Order Bendix P/N 5013711.

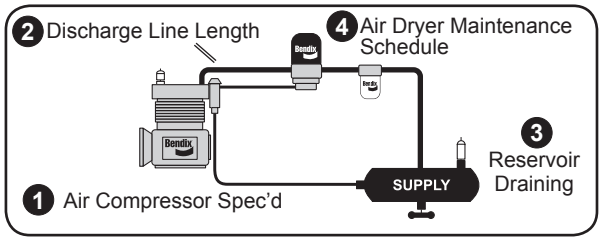

	Low Air Use	Medium Air Use	High Air Use	Very High Air Use
	e.g. Line haul single trailer without air suspension, air over hydraulic brakes.	e.g. Line haul single trailer with air suspension, RV, schoolbus.	e.g. Double/triple trailer, open highway coach, (most) pick-up & delivery, yard or terminal jockey, off-highway, construction, loggers, concrete mixer, dump truck, fire truck.	e.g. City transit bus, refuse, bulk unloaders, low boys, urban region coach, central tire inflation.
	Compressor with less than 15% duty cycle (builds air pressure 15% or less of the engine running time.)	Compressor with less than 25% duty cycle (builds air pressure 25% or less of the engine running time.)	Compressor with up to 25% duty cycle	Compressor with up to 25% duty cycle
	(5 or less axles)	(5 or less axles)	(8 or less axles)	(12 or less axles)
1 Examples of Typical Compressors Spec'd[a]	Bendix® BA-921® air compressor; Bendix® Tu-Flo® 550 air compressor	Bendix® BA-921® air compressor; Bendix® Tu-Flo® 550 air compressor	Bendix® Tu-Flo® 750 air compressor; Bendix® BA-922® air compressor	Bendix® Tu-Flo® 750 air compressor; Bendix® BA-922® air compressor; DuraFlo 596™ air compressor
2	**Discharge line:** 6 ft. @ ½ in. I.D. (oil carry-over control suggested upgrade[b]: 9ft. @ 5/8 in.)	**Discharge line:** 9 ft. @ ½ in. I.D. (oil carry-over control suggested upgrade[b]: 12ft. @ 5/8 in.)	**Discharge line:** 12 ft. @ ½ in. I.D. (oil carry-over control suggested upgrade[b]: 15 ft. @ 5/8 in.)	**Discharge line:** 15 ft. @ 5/8 in. I.D. (oil carry-over control suggested upgrade[b]: 15 ft. @ ¾ in.)
3	Drain Reservoirs Every Month - 90 Days	Drain Reservoirs Every Month - 90 Days	Drain Reservoirs Every Month	Drain Reservoirs Every Month
4	Replace Air Dryer Cartridge Every 3 Years[c]	Replace Air Dryer Cartridge Every 3 Years[c]	Replace Every 2 Years[c]	Replace Every Year[c]
Oil Passing Concerns?	Use the BASIC Test Kit: Bendix P/N 5013711 BASIC test acceptable range: ≤ 3 oil units per month.	Use the BASIC Test Kit: Bendix P/N 5013711 BASIC test acceptable range: ≤ 3 oil units per month.	Use the BASIC Test Kit: Order Bendix P/N 5013711 BASIC test acceptable range: ≤ 5 oil units per month.	Use the BASIC Test Kit: Order Bendix P/N 5013711 BASIC test acceptable range: ≤ 5 oil units per month.

a. Note: Compressor and/or air dryer upgrades are recommended in cases where duty cycle is greater than the normal range (for the examples above). For certain vehicles/applications, where turbo-charged inlet air is used, a smaller size compressor may be permissible.

b. To counter above normal temperatures at the air dryer inlet, (and resultant oil-vapor passing upstream in the air system) replace the discharge line with one of a larger diameter and/or longer length. This helps reduce the temperature of the discharged air. If sufficient cooling occurs, the oil-vapor condenses and can be removed by the air dryer. Discharge line upgrades are not covered under warranty. Note: To help prevent discharge line freeze-ups, shorter discharge line lengths or insulation may be required in cold climates. See Bendix Bulletins TCH-08-21 and TCH-08-22, for more information.

c. With increased air demand the air dryer cartridge needs to be replaced more often.

Governors and Components

The **Governor** monitors the air pressure in the supply reservoir and operates the compressor unloading mechanism to control whether the compressor builds air pressure or not.

The **Bendix® D-2® governor** is an adjustable piston-type valve available preset to a choice of pressure settings. Note: The pressure range between the cut-in and cut-out pressure is designed into the governor and is not adjustable. The D-2® governor may be direct-mounted to the compressor or remote-mounted as desired. Specialized governors are available for vehicles needing a governor adapted to abnormally high or low temperatures, as well as a "weatherproof" model.

The **D-2A™ governor** is a non-adjustable version of the D-2® governor.

The **D-2®/SV-1™ governor module** is a special combination device used with the Bendix® DuraFlo 596™ air compressor to provide the fast-rising unloader signal needed by this compressor.

Safety Valves are used in an air brake system to protect against excessive air pressure buildup and to sound an audible alert. Safety valves are available in both adjustable (e.g. the Bendix® ST-1™ valve) and non-adjustable (e.g. ST-3™, ST-4™ valve) styles, in various pressure settings, and for various port sizes. Maximum service system air pressure allowed by government regulation is typically 150 psi. Various safety valve settings are used at different points in the charging and treatment system.

Specifically designed for use in compressors, ST-4™ safety valves are installed in an extra compressor head discharge port, if available, or in the discharge line near the compressor, to prevent compressor damage in the event of discharge line blockage.

An **Inlet Regulating Valve** (or "IRV") is typically used on multi-cylinder compressors which receive their input air supply from the pressurized side of the engine turbocharger. The IRV, which is generally mounted to the compressor inlet, is designed to regulate compressor inlet pressure to 10 PSI or less. The outlet flange of the IRV can be mounted to all Bendix® Tu-Flo® compressors except the Bendix® Tu-Flo® 300 compressor. The IRV may not be used in conjunction with single cylinder compressors.

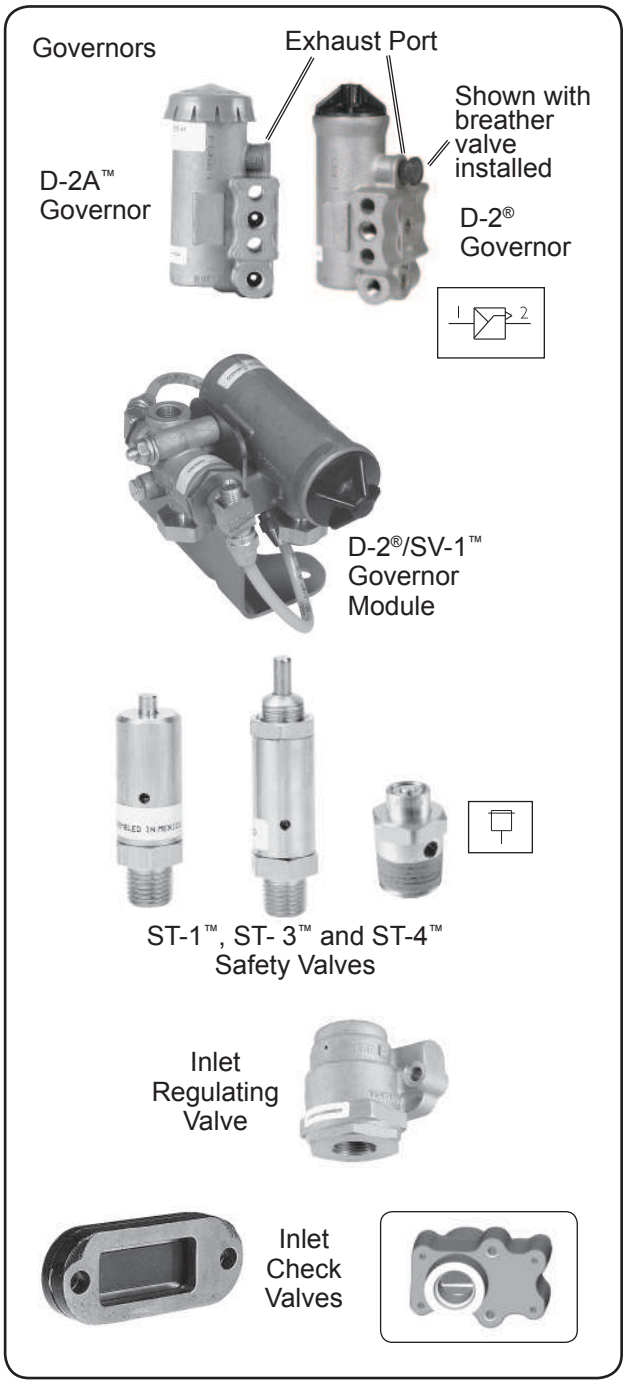

Inlet Check Valves (or "ICV") are used on naturally aspirated compressors to prevent oil mist from entering the inlet line during the unloaded cycle. The inlet check valve either mounts to the intake side of the compressor (and must be used in conjunction with an inlet valve stop or inlet adapter), or may be mounted remotely.

Reservoirs (or "air tanks") serve the air brake system as a storage tank for compressed air. The reservoir size is selected by the vehicle manufacturer to provide an adequate amount of air for use by the braking system and other control devices.

Bendix reservoirs are built in accordance with SAE specifications and are available in various sizes in both single and double compartment design configurations, and are certified to comply with government regulations (such as FMVSS 121).

Reservoir draining devices are installed in air brake reservoirs, and allow liquid contaminants collected to be drained off. Vehicles without air dryers are normally drained each day. Vehicles which have Bendix desiccant air dryers should be drained every 30-90 days. [Tip: The presence of water may indicate that the air dryer cartridge may need to be replaced. Other potential sources of water in the reservoirs are: when shop air has been used to fill the system, an excessive duty cycle, or excessive air leakage.]

Manual draining devices consist of drain cocks which require manual operation at the point at which they are installed. Drain cocks are available in various styles and pipe thread sizes. [Tip: Always drain contents slowly for best results.]

The Bendix® DV-2™ automatic reservoir drain valve is a completely automatic draining device. It is installed directly into the end or bottom drain port of the reservoir and does not require any additional control lines. It is available in either an end-port or bottom-port version, and with or without a (12v or 24v) heater. These are most suitable for systems without a desiccant air dryer.

Single Check Valves

The in-line single check valve allows air flow in one direction only. Several sizes and configurations are available to accommodate various piping arrangements. Single check valves are used in air brake systems to prevent loss of remaining system pressure if another reservoir, or hose etc. upstream in the system fails.

For double check valves and pressure protection valves, see page 14.

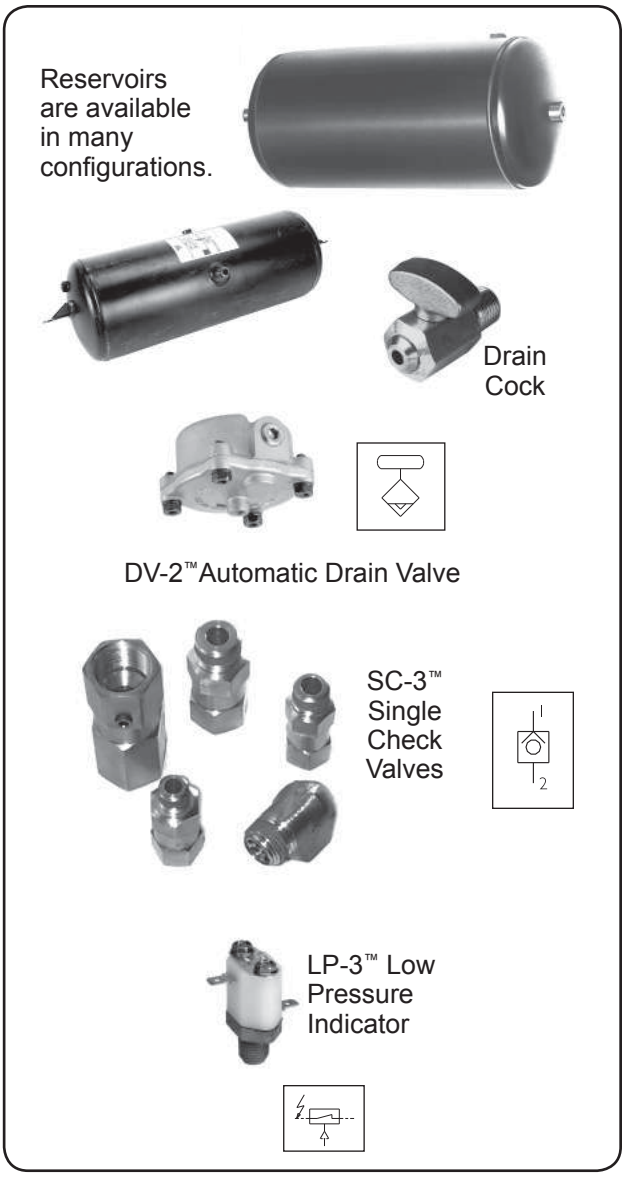

Low Pressure Indicators

Low pressure indicators are pressure-operated electro-pneumatic switches that are designed to complete an electrical circuit and actuate a warning light and buzzer for the driver in the event air pressure in the service brake system is below a minimum level for normal operation. The low pressure indicator is available in various pressure settings, is not adjustable, and is generally used in conjunction with a dash mounted warning lamp or warning buzzer or both.

Air Dryers

The air dryer is an in-line filtration system that removes both water vapor and oil droplets from the compressor discharge air after it leaves the compressor. This results in cleaner, drier air being supplied to the air brake system, and aids in the prevention of air line and component freeze-ups in winter weather.

Air dryers typically use a replaceable cartridge containing a desiccant material and an oil separator. Most of the oil droplets are removed by the oil separator as the air passes into the air dryer. The air then moves through the desiccant material which removes most of the water vapor.

When the air pressure in the supply air tank reaches the required level, the governor makes the compressor stop building air and allows the air dryer's "purge cycle" to begin. During the purge cycle the desiccant material is regenerated (its ability to remove water is renewed) by a reversal of the saturation process. A small amount of dry air passes back through the desiccant material and the water that has been collected, as well as any oil droplets collected by the oil separator, are purged out through the base of the dryer. It is normal to see a small amount of oil around the purge valve.

The air dryer end cover is typically equipped with an integral (12 or 24 volt) heating element.

The **AD-2®, AD-4®, AD-9® and AD-IP® air dryers** are designed with an internal storage ("purge volume") of dry air for the purge cycle.

The **AD-IS® air dryer** is an integral purge air dryer module, which includes a spin-on desiccant cartridge, governor, reservoir, and four pressure protection valves. These have been designed as an integrated air supply system. The **DRM™ module** includes an **AD-IS® integrated solution air dryer**, with all the features just mentioned, along with a reservoir (including a separate purge reservoir section).

"Extended Purge" air dryers are designed with an extra amount of air storage internally that is used to assist in the purge cycle. An example is the **AD-IP® EP air dryer**.

Several Bendix air dryers are available in specialized **"Drop-in"** versions designed especially for air systems that use either the Holset (Cummins) Type E or QE air compressor. These Holset compressors utilize an unusual unloading system that requires that air pressure remain in the discharge line during the entire unloaded cycle of the compressor. For example, the AD-IP® "Drop-in" version is shown here.

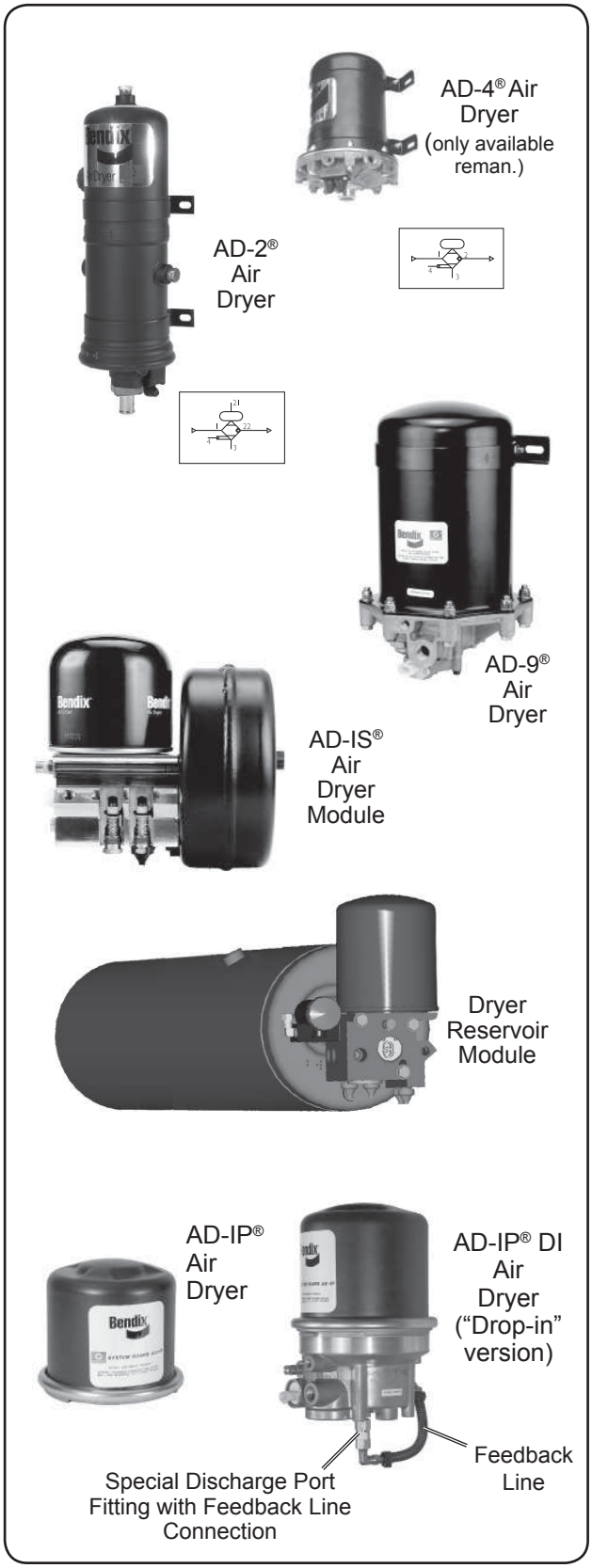

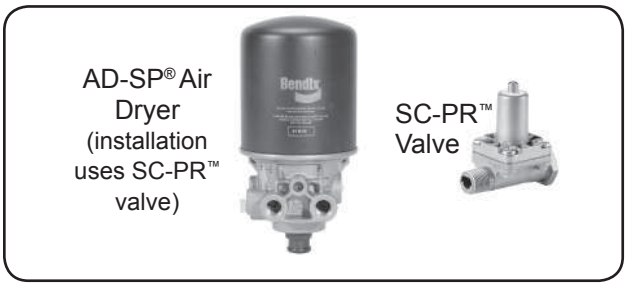

The **AD-SP® air dryer** uses a small amount of air from the supply and front axle (secondary) reservoirs to perform the purge function. Because of this difference, the AD-SP® air dryer is smaller and lighter than air dryers that have their purge volume within the dryer canister. An **SC-PR™ Single Check Protection Valve** is used in conjunction with the AD-SP™ air dryer. The SC-PR™ single check protection valve is a combination of two separate devices, a single check valve and a pressure protection valve that allows limited flow in the opposite direction. It serves as a means of protecting the air pressure in the front axle service reservoir, since it will only allow its air supply to be used to help purge the AD-SP® air dryer if the pressure is above a certain preset level.

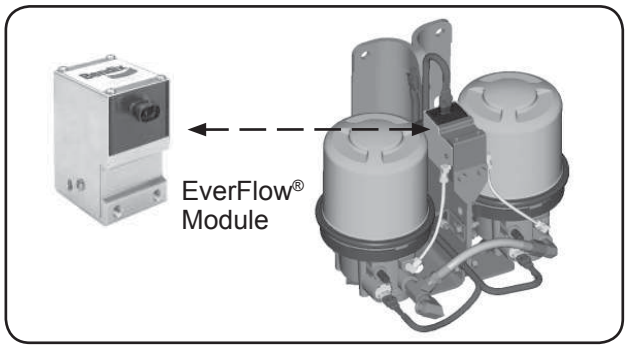

EverFlow® Module

The EverFlow® air dryer module is used for air dryer systems where a vehicle needs a continuous flow of air, such as for bulk unloaders and central tire inflation. As stated earlier, air dryers need to go through a purge cycle periodically to refresh the moisture-removing desiccant material. EverFlow® air dryer modules have two air dryers plumbed in parallel that take turns supplying air, resulting in a continuous, uninterrupted supply.

System-Guard® Trailer Air Dryer

The System-Guard® trailer air dryer removes moisture and contaminates from the trailer air system. It is designed to protect the trailer air brake system when, for short periods of time, the trailer is pulled by vehicles without an air dryer or during times when the trailer is disconnected from the tractor. It does not take the place of a dryer normally located on the power unit, but acts as a buffer to remove moisture during wet times and gives up moisture during dry times.

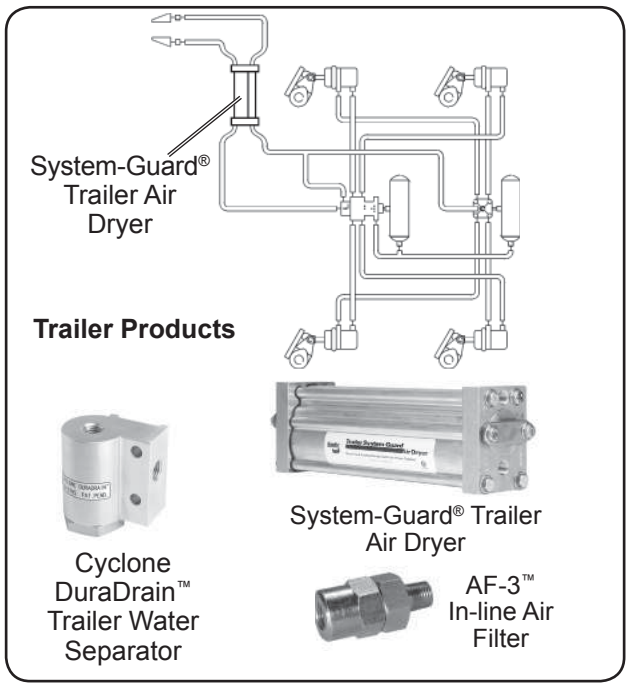

PuraGuard® Filters

The PuraGuard® QC oil coalescing filter (and its predecessor PuraGuard® system filter) are for high air use vehicles such as transit buses and refuse trucks. Installed downstream of the air dryer, these filters use a replaceable filter element mounted within a sump housing to remove oil aerosols before they can enter the air system. A drain valve allows periodic maintenance.

Cyclone DuraDrain™ Trailer Water Separator

The Cyclone DuraDrain™ trailer water separator is installed in the trailer control and/or supply lines near the gladhands. It self-purges liquid contaminates, contains solid contaminants and improves the life of the trailer system components.

AF-3™ In-line Air Filter

The AF-3™ in-line air filter screens out foreign material from trailer air lines.

Additional Charging System Related Components

A **double check valve** is used in the air system when a single function or component must receive air from, or be controlled by, the higher of two sources of pressure. An internal disc or shuttle moves in response to the higher air pressure and allows that air source to flow out of the delivery port. It is recommended that double check valves be mounted so that the shuttle (or disc) operates horizontally.

While not strictly part of the charging system, the **DS-2™ double check valve and stop light switch** (shown on this page) performs the function of both a stop lamp switch and a double check valve. In some vehicle brake systems, it is used to detect air pressure from either brake circuit source, and will operate the stop lamp switch, lighting the stop lamps.

Auxiliary Systems

Vehicle auxiliary components and systems (air actuated wipers, suspension, etc.) requiring compressed air must wait until the reservoirs in the charging system have reached a predefined minimum pressure, sufficient for braking purposes. Once the system has reached the preset minimum, pressure protection valves open to supply auxiliary systems.

Pressure Protection Valves

The **pressure protection valve** is a normally-closed pressure sensitive control valve. These valves can be used in many different applications but are typically used to protect or isolate one reservoir from another, by closing automatically at a preset pressure. The valve is also commonly used to delay the filling of auxiliary reservoirs until a preset pressure is achieved in the primary or braking reservoirs. Pressure protection valves allow air to be "shared" between two reservoirs above the closing setting of the valve. The sharing ceases when pressure drops below the closing pressure of the valve and the reservoirs are then isolated from each other.

The **PR-2™ pressure protection valve** is externally adjustable, while the **PR-4™ pressure protection valve** (shown) has a fixed setting. Both valves are available in various factory preset pressure settings. The **PR-3™ pressure protection valve** differs from the two previously mentioned since its design includes a check valve preventing air return.

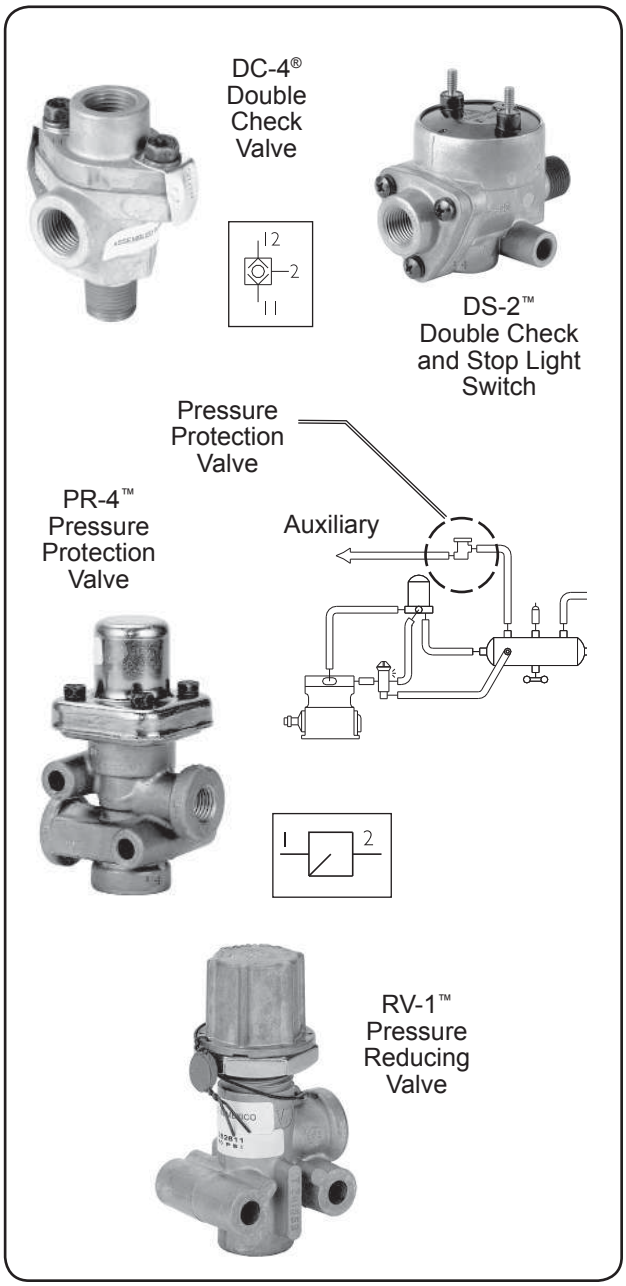

Pressure Reducing Valves

The **pressure reducing valve** is used in various applications where a constant set air pressure lower than supply pressure is required. A typical application is an air operated accessory that requires less than system pressure for operation. The **RV-1™ pressure reducing valve** (shown) is available in a wide range of pressure settings and can be manually adjusted. The **RV-3™ pressure reducing valve** is available with factory preset pressure settings only and cannot be manually adjusted.

Section 3: The Control System

The control system typically consists of:

- A **foot brake valve** and often an additional **hand-operated trailer brake control valve**
- **Brake actuators** or **rotochambers**, to change the applied air pressure into a push-rod force which operates the foundation brakes (air disc, S-Cam, etc.)
- **Quick release valves** to assist in releasing the brakes quickly
- Vehicle parking using **push-pull hand operated valves** and **spring brakes**,
- **Anti-compounding** system design to prevent both the service brakes and the parking brakes being applied at the same time, and
- **Proportioning valves** to adjust braking when a tractor is not pulling a trailer

See the inside front cover for a sample system schematic. The primary (rear) brake circuit is shown in green and the secondary (front) brake circuit is shown in orange.

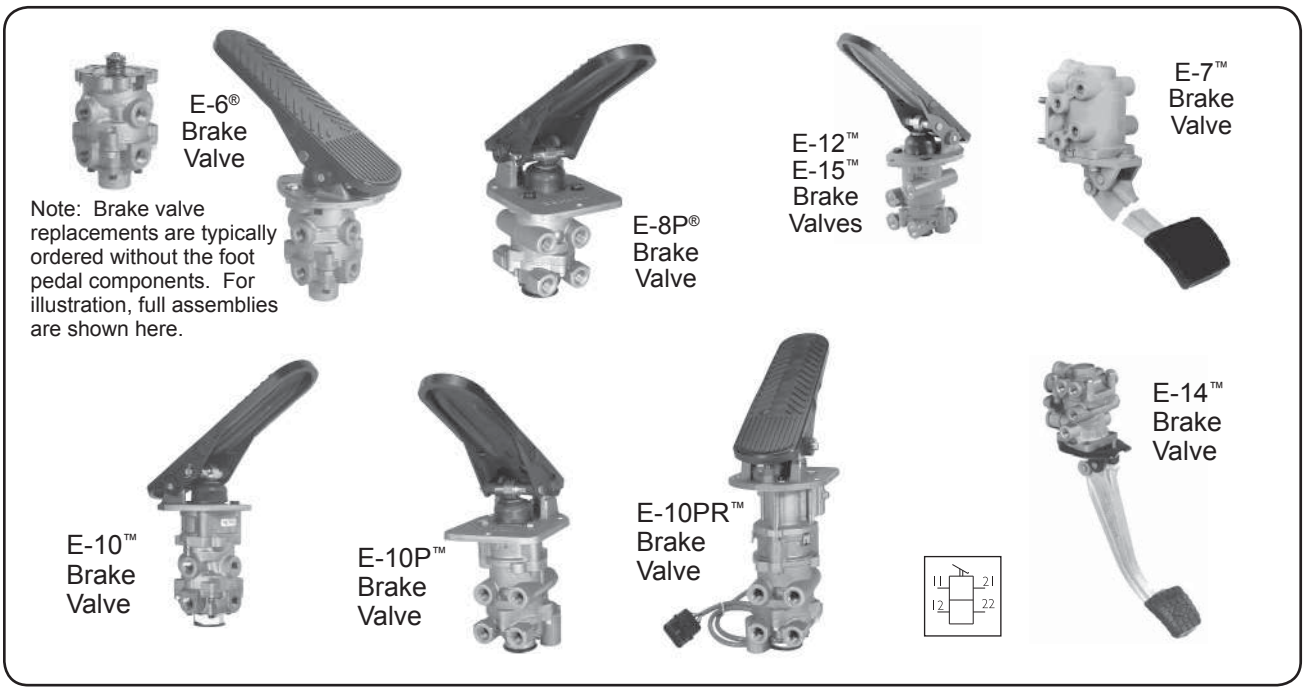

Dual Circuit Brake Valves

When the driver applies the service brakes using the brake pedal/treadle, a two-part plunger within the brake valve moves, closing the valve's exhaust and opening passages within the valve that allow the air pressure waiting there to pass through and be delivered to the rear and front brake systems. The pressure quickly increases in the brake chambers and applies force to the push rod, transferring the force to the S-cam or air disc brake. Frictional forces slow the wheels and the vehicle comes to a stop. When the driver removes all force from the brake valve the internal return springs move back to their original position and allow air in the valve and delivery lines to vent to atmosphere through the exhaust port.

The Bendix® E-6®, E-8P®, E-10™, E-10P™, E-12™ and E-15™ dual brake valves are typically **floor mounted** and treadle operated, while the Bendix® E-7™ and E-14™ dual brake valves are **bulkhead mounted**, suspended pedal valves.

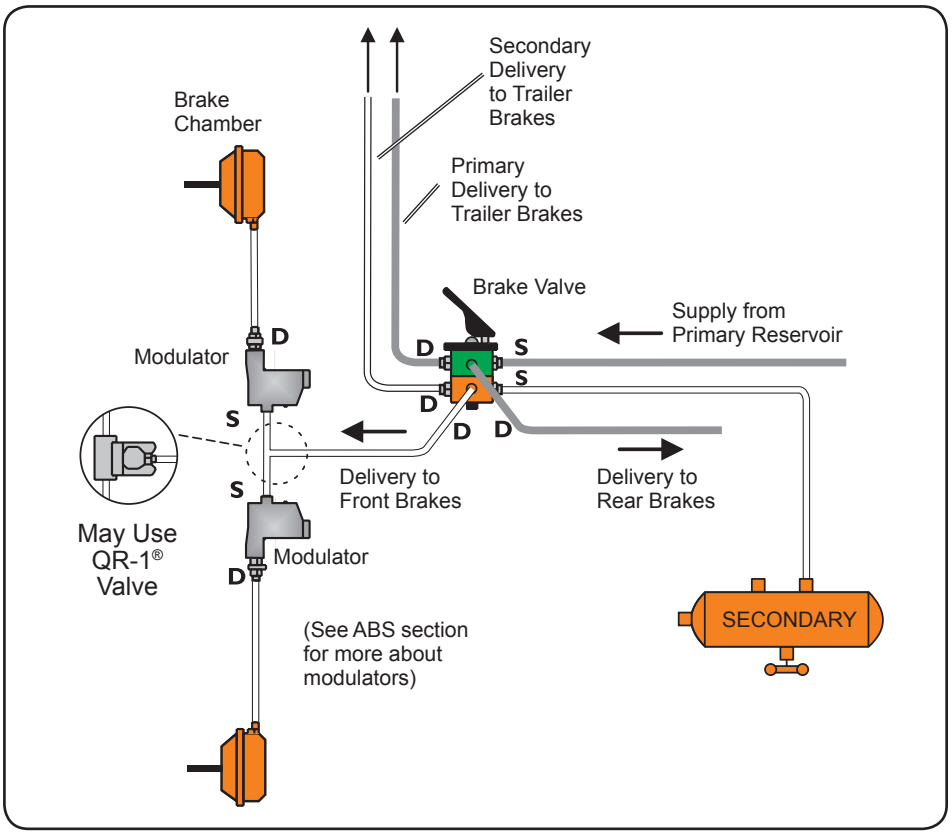

Mostly used in the transit (buses/coaches) industry, the **E-10PR**™ retarder control brake valve has circuitry that is used to communicate with retarder systems installed on automatic transmission vehicles - extending the life of brake system components.

Hand-operated Brake Valves

For information on trailer control hand-operated valves, see page 29.

Vehicle Parking

For vehicle parking, rear brake actuators are designed with large internal springs that, when engaged, hold a parked vehicle in position. When the driver prepares to move away and releases the parking brake, the spring force is countered by the introduction of air pressure into a chamber within the spring brake portion of the actuator. A feature called anti-compounding helps prevent the application of both the spring and service brakes together.

Take Air Brake Training with the Experts

Bendix is proud to offer its Air Brake Training School.

The three-day training is tailored to both new and experienced technicians and provides students with valuable technical knowledge. Beginning with the fundamentals of compressed air, classes cover the description, operation and service of major Bendix air brake components of dual air brake systems, as well as antilock braking.

To enroll, visit www.bendix.com and visit our training school pages to see the dates of classes offered in your area. Class size is limited and enrollment is on a first-come, first-serve basis. Registration may be completed online, or by phone (1-800-AIR-BRAKE).

Actuators

Actuators convert the air pressure being applied into a mechanical push-rod force acting on the foundation brakes. Air enters the actuator and pressurizes a chamber containing a rubber diaphragm. The air pushes against the diaphragm, pushing against the return spring and moving the push-plate (and push-rod) forward. Some different types of actuators used in air brake systems are: brake chambers, rotochambers (with longer push-rod stroke travel), spring brake actuators (for rear brake axles) and safety actuators (with internal locking mechanisms).

Brake chambers are available in many sizes, providing a wide range of output forces and strokes. Different size brake chambers are identified by numbers which specify the effective area of the diaphragm: a “type 30” brake chamber has 30 square inches of effective area. Some brake chambers with extended push-rod stroke travel are available.

Rotochambers are also available in several sizes, providing a wide range of output forces. The rolling type diaphragm used in rotochambers provides long life and gives a constant output force throughout the entire stroke. Rotochambers are frequently used in industrial applications.

Spring brake actuators are composed of separate air and mechanical actuators in a single housing. Mounted at the wheel of the axle it serves, it functions as a service, parking and emergency brake. Connected to the service brake valve, the air applied portion of the actuator functions as the service brake. The mechanical portion of the actuator contains a powerful spring which is compressed by adding air pressure or released by removing air pressure. The spring brake therefore contains two actuators which use air pressure in opposite ways. The service actuator requires air pressure to apply the brakes, while the park or emergency actuator uses air pressure to release the brakes.

See the section starting on page 53 for information about the physics behind how actuators work.

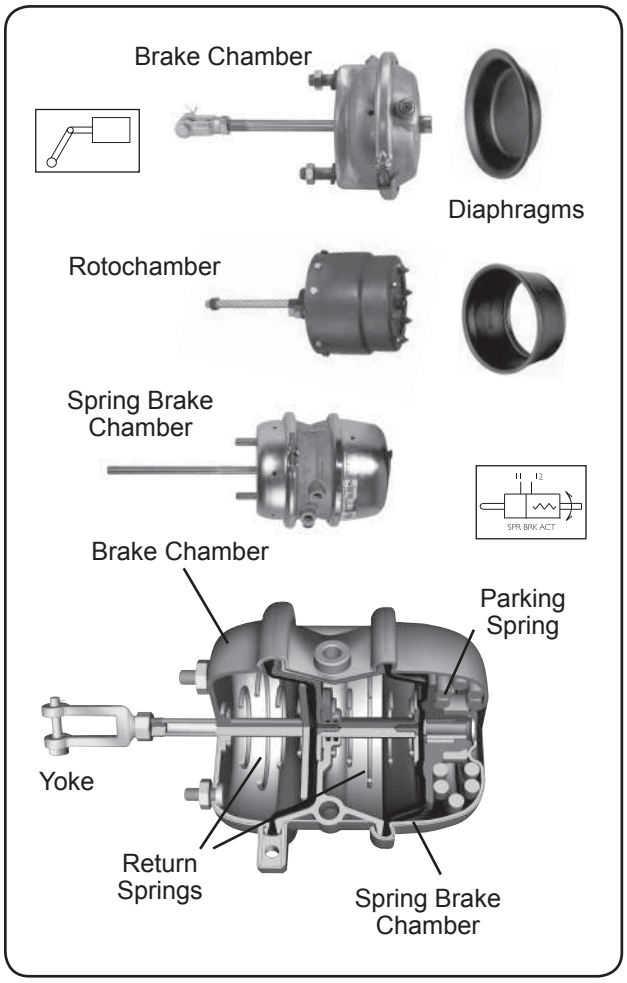

Slack Adjusters

The slack adjuster is the link between a brake chamber or actuator and the S-Cam brake camshaft. Its arm is fastened to the push rod with a yoke and its spline is installed on the foundation brake cam shaft. It transforms and multiplies the force developed by the chamber into a torque which applies the brakes via the brake camshaft.

Manual Slack Adjusters

To compensate for the gradual wear on the brake block lining, slack adjusters are equipped with an adjusting mechanism, which provides a means of adjusting for brake lining wear. Slack adjuster models are designated by a number which represents its maximum torque rating (e.g. a type 20 unit is rated for a maximum of 20,000 inch-pounds of torque). Slack adjusters are available in various arm configurations, lengths and spline types.

The entire slack adjuster operates as a unit, rotating as a lever with the brake cam shaft as the brakes are applied or released. The most efficient braking action is obtained when the slack adjuster arm travel is approximately 90 degrees and in the recommended range of the chamber. Therefore, it is important that brake adjustments are made as often as necessary.

Automatic Slack Adjusters

Automatic slack adjusters perform the same function as the standard unit, except that it automatically adjusts for lining wear. The Bendix design monitors brake lining to brake drum clearance, thus eliminating the possibility of over adjustment.

The automatic slack adjuster does **not** require periodic manual adjustment, however, the unit does provide for manual adjustment. All Bendix slack adjusters incorporate a grease fitting and/or a tapped hole for a lube fitting.

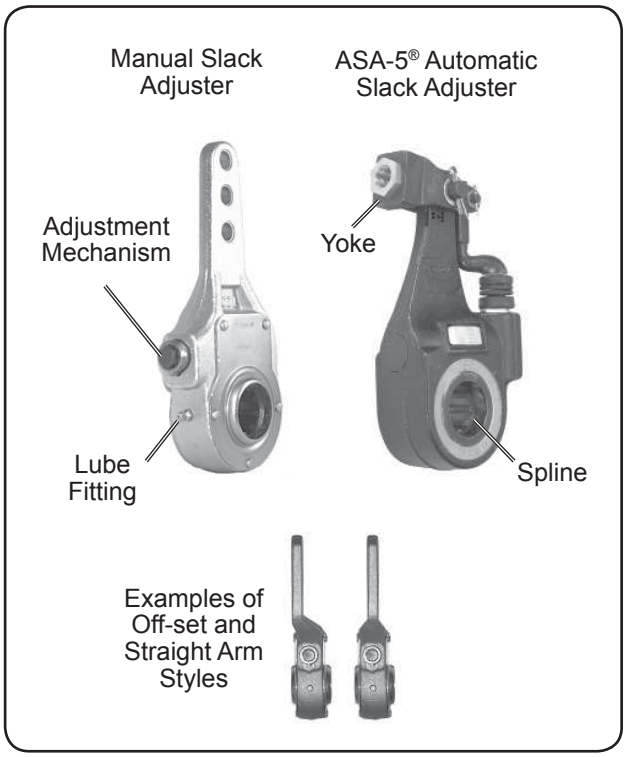

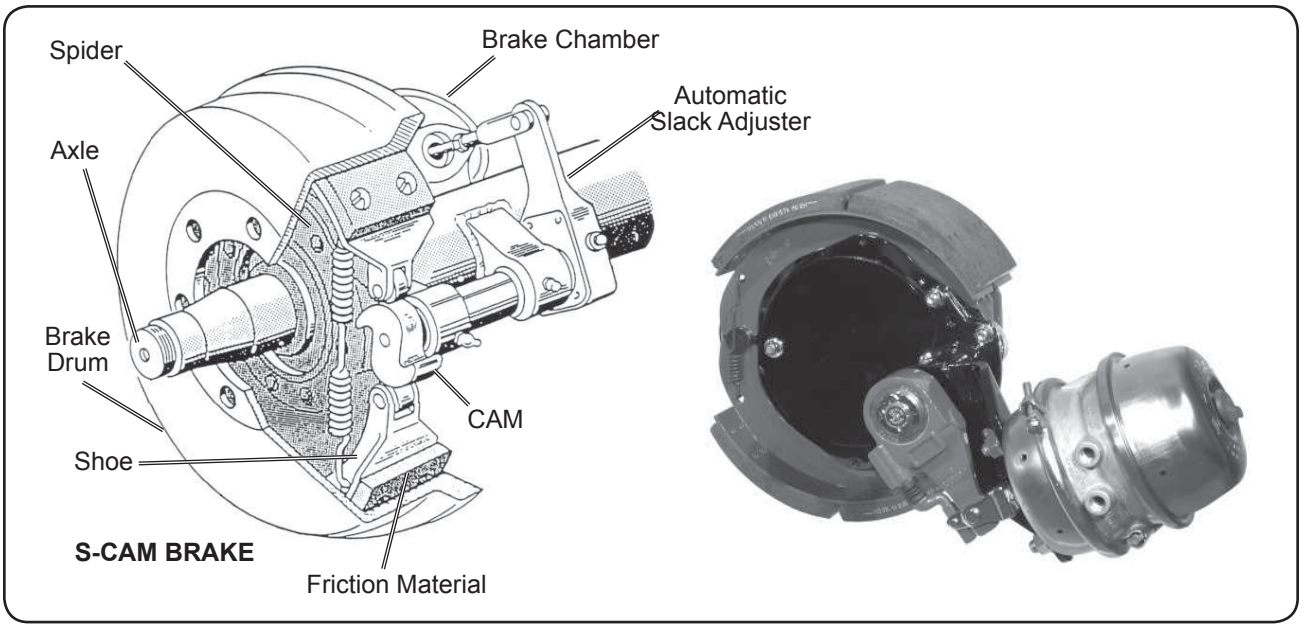

Foundation Brakes: S-Cam and Air Disc

The foundation brake is the actual braking mechanism located at each end of the axle that provides the primary retardation for controlling vehicle speeds. It generally consists of an air service and/or spring brake chamber, a mechanical brake mechanism and friction material.

Cam Actuated Drum Brakes

In a cam type foundation drum brake, the pneumatic system is linked by an air line to the air service and/or spring brake chamber, which is then connected to the arm of a slack adjuster by a push rod and clevis. The slack adjuster is installed on the spline of the forged brake cam shaft. The slack adjuster acts as a lever, converting linear force of the chamber push rod into a torsional force needed to apply the brakes.

When torque is applied to the cam shaft, the “S” shape on one end of the cam spreads the brake shoes, forcing the brake lining into contact with the brake drum, therefore retarding and/or stopping the vehicle.

Cam brakes are offered in various drum diameters to meet vehicle braking requirements, with the most commonly encountered being the 16½ inch version. The cam brake has a “leading-trailing” shoe design with one or more fixed anchor points for the shoes, opposite the cam end of the shoe.

The structure of cam actuated brakes generally consists of stamped steel brake shoes and spiders (torque plates) for standard duty applications, and cast shoes and spiders for heavy duty applications.

S-Cam Brake Linings

When cam actuated drum brakes are applied, the friction material contacts the brake drum. The friction between the lining and drum effectively converts the kinetic energy of the vehicle into thermal energy, heating up the brake drum and lining. The friction material used in the brake must have the capability of withstanding the heat until dissipated. It takes the right combination of ingredients to provide all the desirable characteristics: including having a torque output sufficient to stop the vehicle, long lining life, long drum life, and noise reduction.

All friction material is identified by stenciled codes on its edge. These codes consist of the name or brand of the manufacturer, the formula identification, the specific part number, and usually two letters designating the lining’s general friction level (examples: EF, FG). It should be noted that these stenciled letters are not considered to be accurate enough for choosing replacement linings. Either genuine original equipment linings should be used or an approved material with direct performance comparison.

Selecting the ideal friction material also is dependent upon how the driver uses the brakes, the terrain, vehicle load, etc. The various formulations of material are designed to meet the different needs of these conditions. For example, a vehicle performing heavy duty operations on rugged terrain may benefit by using

a “premium” material designed for high heat situations instead of a “standard” material designed for lighter duty operations.

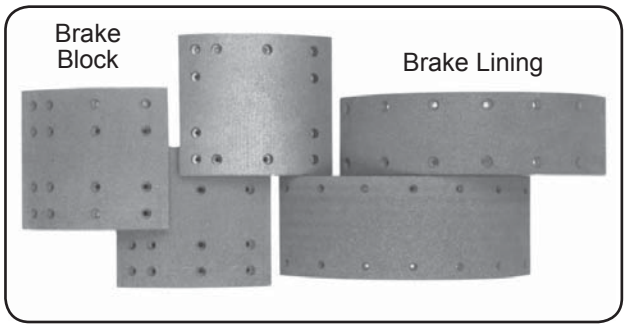

Air Disc Brakes

Bendix air disc brakes are a “floating caliper” design for use as a foundation brake on all axles of heavy commercial vehicles and trailers. In terms of performance and ease of service, Bendix air disc brakes compared favorably to traditional S-Cam brakes. They are available in models with or without a combination spring brake chamber.

Bendix air disc brakes convert air pressure into braking force. When the foot brake is applied, air from the vehicle brake system enters the service brake chamber through the supply port, applying pressure to the diaphragm. The pressure pushes the diaphragm, moving the pressure plate and pushrod against a cup in the lever. The lever pivots on an eccentric bearing and transfers motion to the actuating beam. Moving against return spring force, the actuating beam moves two threaded tubes and tappets, which force the inner brake pad into contact with the brake rotor. Further movement of the actuating beam forces the caliper, sliding on two stationary guide pins, away from the rotor, which pulls the outer brake pad into the rotor. The clamping action of the brake pads on the rotor applies braking force to the wheel.

Releasing the foot brake releases pressure in the service brake chamber. With no pressure in the service brake chamber, return springs force the air disc brakes into a neutral, non-braked position. The non-braked position is mechanically controlled by a brake adjuster mechanism in the caliper. The caliper contains a brake adjuster mechanism that turns threaded tubes to set a gap (running clearance) between the rotor and the brake pads. When operated manually with the adjuster

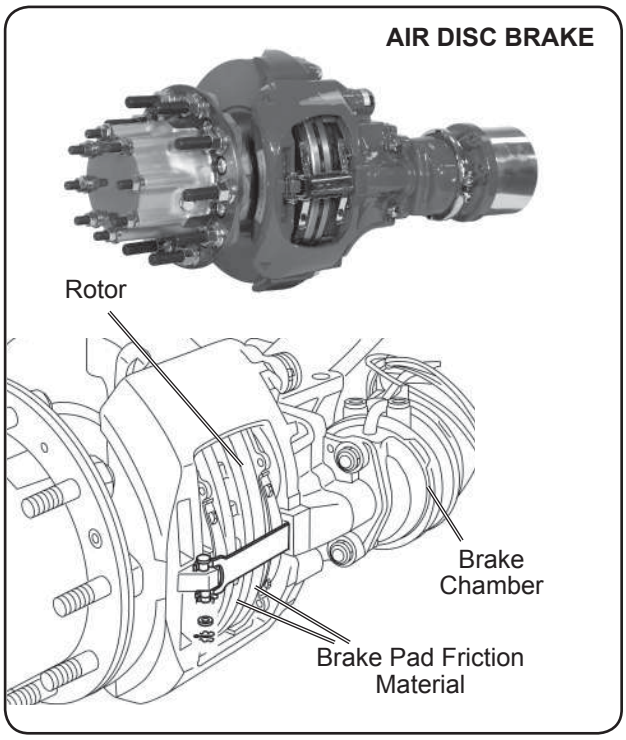

shaft, the adjuster mechanism sets the system’s non-braked position. The adjuster mechanism also operates automatically, whenever the brakes are activated, to compensate for rotor and brake pad wear and keep the running clearance constant.

The rotor-friction couple is carefully designed for optimal performance and durability. It is recommended that only approved replacement disc pads or rotors be used to prevent damage to disc brake components (e.g. cracked rotors) or premature or uneven pad wear, which can adversely affect braking performance.

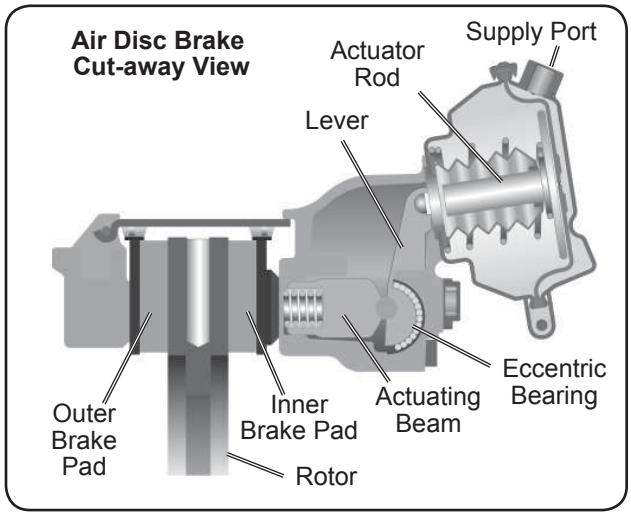

Quick Release Valves

The function of the **quick release valve** is to speed up the exhaust of air from the air chambers. It is mounted close to the chambers it serves. In its standard configuration, the valve is designed to deliver within one psi of control pressure to the controlled device; however, for special applications the valve is available with greater differential pressure designed into the valve.

Several styles of quick release valves are available and are functionally the same. The **QRV™ quick release valve** is the oldest design and utilizes a die cast metal body with an internal diaphragm, spring and spring seat. The **QR-1® quick release valve** also has a die cast body and diaphragm, but does not employ a spring or spring seat. The (non-serviceable) **QRN-2™ quick release valve** is a nonmetallic version of the **QR-1® quick release valve**. The **QR-L™ quick release valve** is an inline device.

Ratio Valves

Historically, valves such as the **LQ-2™, LQ-4™** and **LQ-5™ ratio valves** (not shown) were used in the front axle delivery line of vehicles. During normal service brake applications, these valves were used to automatically reduce application pressure to the front axle brakes, however, as brake application pressure was increased the percentage of reduction was decreased until at approximately 60 psi (depending upon valve design) full pressure was delivered.

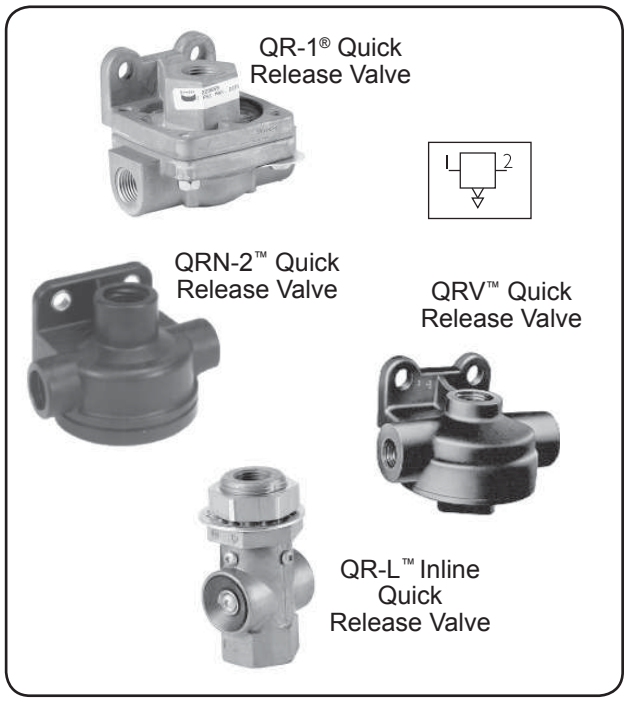

Bobtail Ratio Valves

The **LQ-5™ bobtail ratio valve** is used on the front (steering) axle of tractor air brake systems to reduce brake application pressure during normal tractor-trailer operation. During bobtail mode (when the tractor is not pulling a trailer), tractor braking performance is improved because the LQ-5™ bobtail ratio valve delivers full brake pressure to the steering axle.

The LQ-5™ bobtail ratio valve is designed for tractor systems only, and it replaces the existing front axle limiting valve.

Brake Proportioning Relay Valves

The **BP-R1® bobtail proportioning relay valve** is a combination of two valves in a single housing. The lower portion contains a "standard" service brake relay valve, which functions as a relay station to speed up brake application and release. The upper portion houses a brake proportioning valve which reduces normal service brake application pressure when the tractor is not towing a trailer (bobtail operation). The control port on the BP-R1® valve is connected to the trailer supply valve delivery and signals bobtail operation.

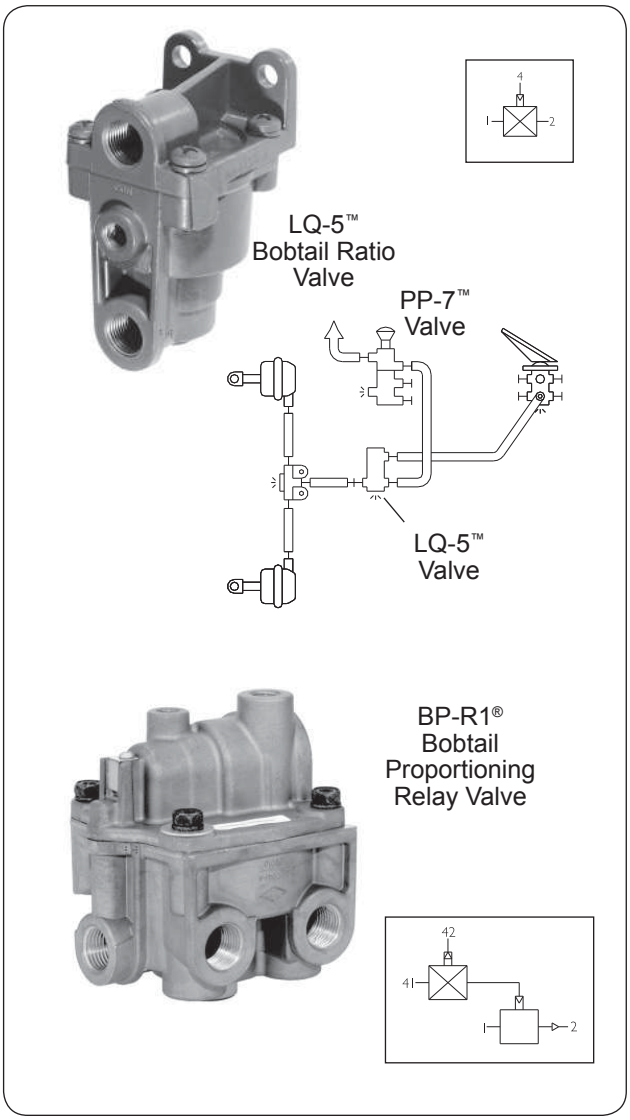

Relay Valves

Relay valves are primarily used on vehicles to apply and release rear axle(s) service or parking brakes. When the driver applies the brakes, air travels through the delivery (in this case signal) line to the relay valve and moves an internal piston down. This closes the exhaust and opens the delivery of air to the brakes. The primary benefits of using a relay valve is that the high capacity of air needed for braking is delivered directly and does not have to travel up to the brake valve and then all the way to the brakes. The brake force is adjustable and when released the relay valve exhausts to atmosphere. Relay valves are generally mounted close to the chambers they serve and are available in both remote and reservoir mount designs. The inlet/exhaust valve cartridge can be replaced without line removal.

In order to design braking systems with good brake timing, that is, where brake application occurs in the correct sequence, some models of relay valves are available in multiple "crack pressures". The crack pressure value for a particular valve is varied by the use of different strength return springs within the valve which the air pressure signal must overcome before air begins to be delivered to the brake chambers.

The **R-8™ and R-14® relay valves** both incorporate an integral double check valve with a balance port connection which provides both an anti-compounding or quick exhaust feature depending upon vehicle application. The anti-compound feature is used when these valves are used to control spring actuated parking features.

R-12® Relay Valve

R-12P™ Relay Valve (0 crack pressure for long wheelbase trailers and dollies)

R-12DC® Relay Valve (Straight trucks)

R-8™ Relay Valve (Anti-compounding, frame or reservoir mounted)

R-8P™ Relay Valve (0 crack pressure for long wheelbase trailers and dollies)

R-6™ Relay Valve

R-14® Relay Valve (Anti-compounding)

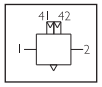

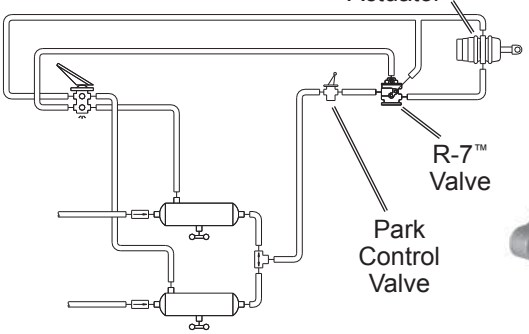

R-7™ Modulating Valve

The **R-7™ Modulating Valve** is used in dual circuit brake systems and performs four functions; during normal operation, it limits hold-off pressure to the spring brakes, provides quick release of air pressure from the spring cavity of the spring brake actuator allowing a fast application of the spring brake actuators, modulates spring brake actuator application should a failure occur in the service brake system and prevents compounding of service and spring forces.

R-7™ Valve

Push-Pull Control Valves

Push-pull control valves are most often mounted on the vehicle dash board and are used for a variety of control applications. The PP-1® and PP-2™ valves are pressure sensitive, normally closed, on/off control valves which automatically return to the exhaust (button out) position when supply pressure is below the required minimum. They may be manually operated to either position when pressure is above the required minimum. Pressure settings and button configuration and wording may vary, depending on application.

The **PP-1® control valve** is commonly used to control parking and emergency brakes. This valve was also used in conjunction with the TP-2™ tractor protection valve in pre-FMVSS 121 single circuit tractor air systems.

Unlike most other push-pull control valves, the **PP-8™** is nonautomatic, and will remain in the applied (button in) position regardless of delivery or supply pressure. The PP-8™ control valve is commonly used to control the tractor brakes only in the (FMVSS 121-compliant) dual system.

The **PP-3™ control valve** is primarily used to control the TP-3® tractor protection valve in pre-FMVSS 121 tractor systems. It features a tripper piston which prevents manual override of the emergency application of trailer brakes.

Trailer Supply Valve (Tractor Protection Control)

The **PP-7™ push-pull control valve** is a pressure sensitive, on/off control valve which will automatically return to the exhaust (button out) position when supply pressure is below the required minimum. It may be manually operated to either position when pressure is above the required minimum. Button configuration and wording may vary depending on application. The automatic exhaust pressure is 40 psi.

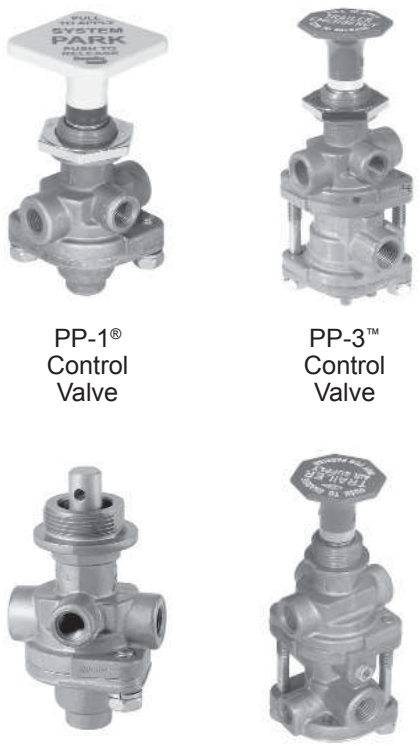

PP-1® Control Valve

PP-3™ Control Valve

PP-8™ Control Valve

PP-7™ Control Valve

The PP-7™ valve is used to control the tractor protection system and is generally identified as the trailer air supply valve. The valve employs an air operated interlock in the lower body which will apply the trailer brakes when the tractor spring applied parking brakes are applied. The interlock ensures that the tractor parking brake can not be applied without the trailer parking brakes also being applied. Normally this action will not affect the position of the PP-7™ valve button. The interlock of tractor and trailer parking is a requirement of government regulations (e.g. FMVSS 121).

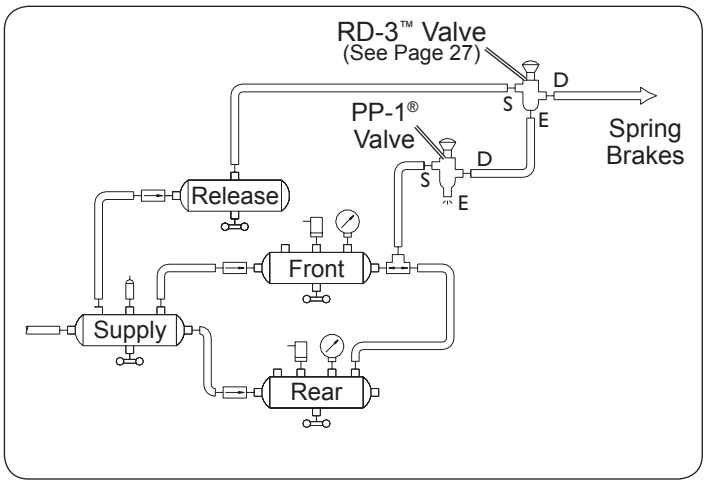

Spring Brake Valves

The **SR-1™ spring brake valve** is used in dual circuit brake systems and serves two functions; during normal operation, it limits hold-off pressure to the spring brakes to 90 or 95 psi. If a loss of pressure occurs in the rear brake service supply, the valve will provide a modulated spring brake application, proportional to the driver's service braking pressure delivered to the front axle.

The Bendix® **SR-7® spring brake modulating valve** is used in dual air brake systems with spring brake actuators. It provides a rapid application of the spring brake actuator when parking, modulates the spring brake actuator application (using the dual brake valve should a primary failure occur in the service brake system) and prevents compounding of service and spring forces.

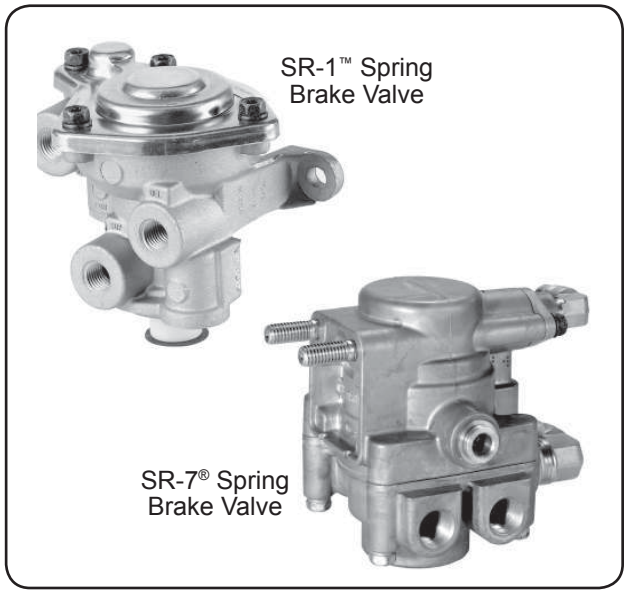

Simple Spring Brake Anti-compound System

General Operation

Brake compounding can occur in a spring brake parking system due to the direct in-line arrangement of both the spring chamber and brake chamber. It occurs in unprotected systems when parking AND service brake applications are made at the same time. An example of this situation occurs when a vehicle is parked on a steep incline; the driver holds the service brakes applied (preventing the vehicle from rolling backward), then actuates the park control which "sets" or applies the spring brakes. For a brief time, the air applied service brakes and the mechanical spring brakes both exert a braking force on the slack adjusters and foundation brakes. The forces of the spring and air applications are additive and can cause damage to the foundation brake components (cam shaft splines, shoes, drum, etc.) and/or slack adjuster. An anti-compounding system is especially important in protecting the adjusting mechanism of automatic slack adjusters from damage caused by over-torque that occurs during a compounded application of the brakes.

Anti-compounding prevents the simultaneous application of both the air and spring brakes by directing application air to the spring brakes when both are applied at once. In the simple anti-compounding schematic shown here, the double check valve allows service application air to apply the service brakes AND move into the spring cavity if they are also applied (no air pressure and springs are also applying brakes).

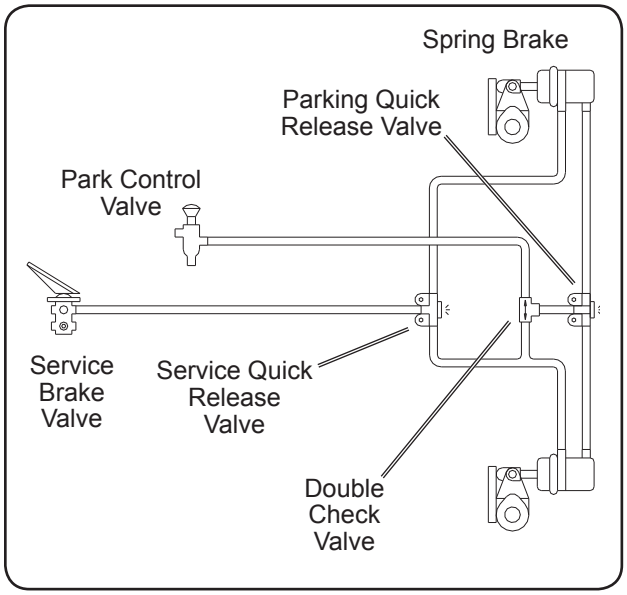

The anti-compounding function of the double check valve is built into several air brake devices such as the SR-7®, R-7™, R-8™, R-14® and QR-1C® valves. When these devices are used in the system, a separate double check valve for anti-compounding is not needed.

It is recommended that the service connection to the anti-compounding device (double check valve) come from a point between the service brake chamber and the first "upstream" service device (in this case a quick release valve).

Lever Operated Control Valves

The TW-2™ and TH-3™ valves are identical in appearance (and similar to the TW-1™, TW-3™ and TW-4™) except they have two control valves housed in a single body. These two valves differ by the internal cammed control lever, which for the TW-2™ control valve has two lever positions, while the TH-3™ valve has three.

The TW-1™, TW-3™ and TW-6™ series control valves are manually operated, non-modulating (on - off) control valves used in a wide variety of control functions. The TW-1™ and TW-3™ are dash-mounted, lever-controlled valves.

The TW-4™ is a manually operated momentary non-modulating control valve commonly used in conjunction with air starter systems.

A momentary push-type control valve, the TW-5™ will deliver air pressure when the plunger is pushed in and exhaust delivered air when the plunger load is released. A typical application is for control of a differential lock-out.

The TW-12™ control valve is a manually operated, non-graduating, on-off valve. It is extensively used in hydraulic braking systems to control devices that are responsible for the application and release of the parking brakes, but is also used in air brake system applications.

Stop Lamp Switches

The SL-4™ and SL-5™ stop lamp switches are pressure-sensitive electro-pneumatic switches installed in the service application system. They operate the vehicle stop lamps by completing an electrical circuit and lighting the stop lamps each time a brake application is made.

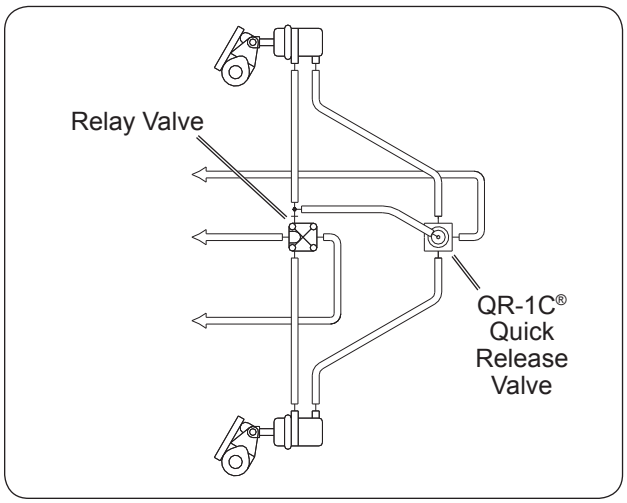

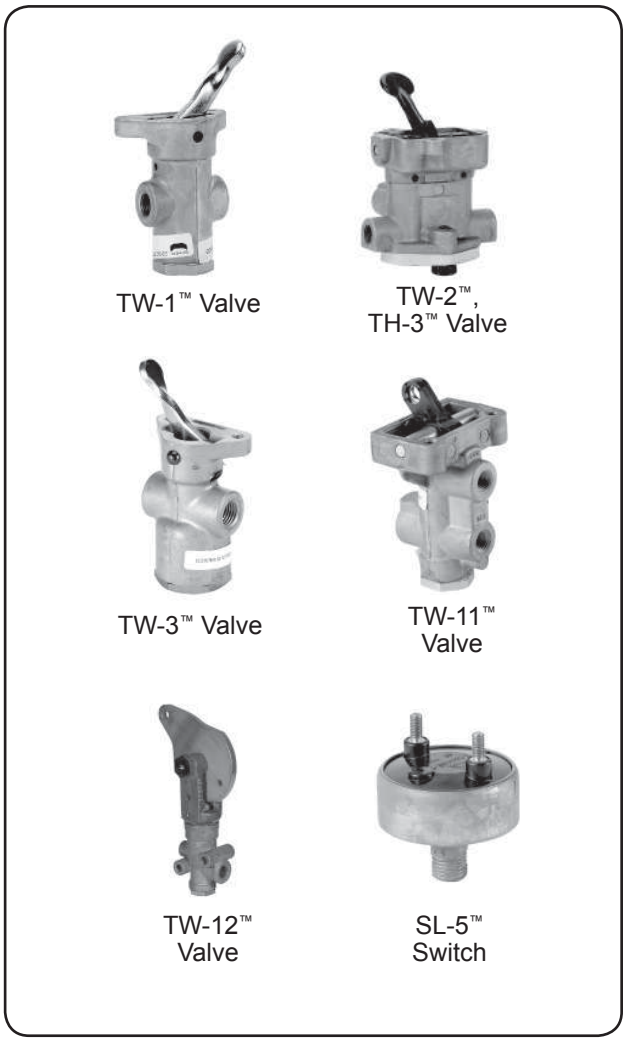

See page 14 for the DS-2™ double check valve and stop light switch.

Dual Function Quick Release Valve

The QR-1C® valve has a dual function. It works as a quick release valve for rapid park brake actuation and also provides anti-compounding, since its double check valve prevents simultaneous service and emergency spring brake applications.

QR-1C® Quick
Release Valve

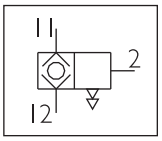

Additional Control Valves

Inversion valves are air operated control valves, and unlike most control valves are normally open, i.e. without control pressure the supply is common to the delivery. The inversion valve is closed by using air pressure from another source and is primarily used in emergency or parking brake systems which operate with air from an isolated reservoir. The valve is also used in interlocking and sequencing applications, where the operation of components must take place in specific sequence.

The **TR-3™ valve** is used extensively in DD3™ actuator systems, it is also used in interlocking applications. A specialized version of the TR-3™ valve is available with an internal channel connecting supply pressure to control, typically with the external control port plugged.

The **SV-1™ synchro valve** is an air signal-operated, non-graduating (on-off) control valve offered in a variety of pressure settings and is used to delay or sequence the action of other pneumatic devices.

When used in non-automatic applications it controls a separate air system circuit.

The SV-1™ valve can also be used as an automatic controller (when its supply and control are connected). The valve will open, close and exhaust automatically as the control and supply pressures rise or fall.

The **PP-5™ push pull control valve** is a pressure sensitive, on - off control valve. It is used in conjunction with vehicle torque converter systems, engine speed control systems and some parking brake systems. In addition to automatic exhaust and manual control, the PP-5™ valve employs a pilot air release feature (interlock) which will allow the valve to be exhausted by applying a low pressure signal from another control valve to the PP-5™ control port.

The **RD-3™** is a manually operated on-off control valve. The valve is spring loaded and will remain in the exhaust (button out) position. Constant manual force is required to cause the valve to deliver air. The RD-3™ control valve is primarily used as an emergency brake release control valve.

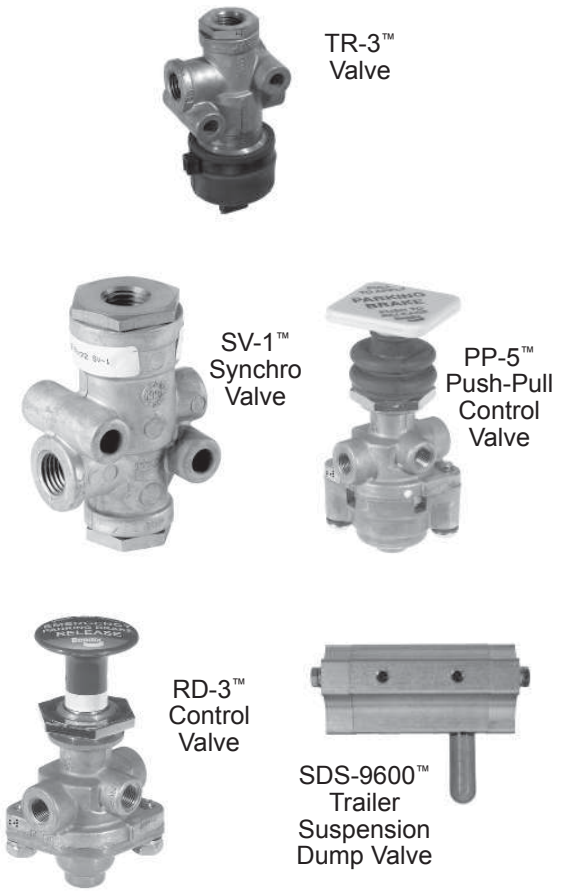

The **SDS-9600™ trailer suspension dump valve** is used on spread axle trailers to help negotiate tight turns at low speeds. When activated, this valve exhausts a portion of the air out of the rear trailer axle suspension, transferring weight to the forward trailer axle. The trailer can then pivot on the forward trailer axle in a turn.

Section 4: Tractor Parking, Trailer Charging/Parking and Emergency Systems

The tractor/trailer parking and emergency system typically consists of:

- **The tractor parking control system**
- **The trailer parking and emergency system**, and
- **The tractor protection system**

See the front covers of this handbook for system schematics.

Park Co ntrol Valves

The **PP-DC® park control double check valve** is a push-pull, manually operable on/off valve with an integral double check. It is dashboard mounted and provides in-cab control of truck or bus parking brakes. Manually pushing or pulling the button will release or apply the parking brakes. The integral double check valve allows the PP-DC® valve to receive supply air pressure from either, or both, the front or rear axle service reservoirs.

The valve is pressure sensitive and automatically moves from the applied (over the road position) to the exhaust position (thus applying the parking brakes) if total system pressure (both front and rear axle reservoirs) drops below 20 to 30 psi.

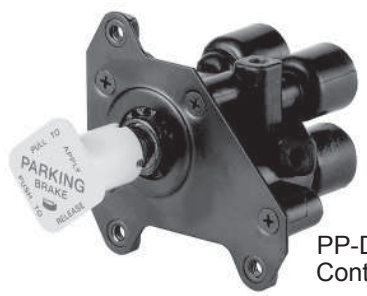

PP-DC® Park Control Valve

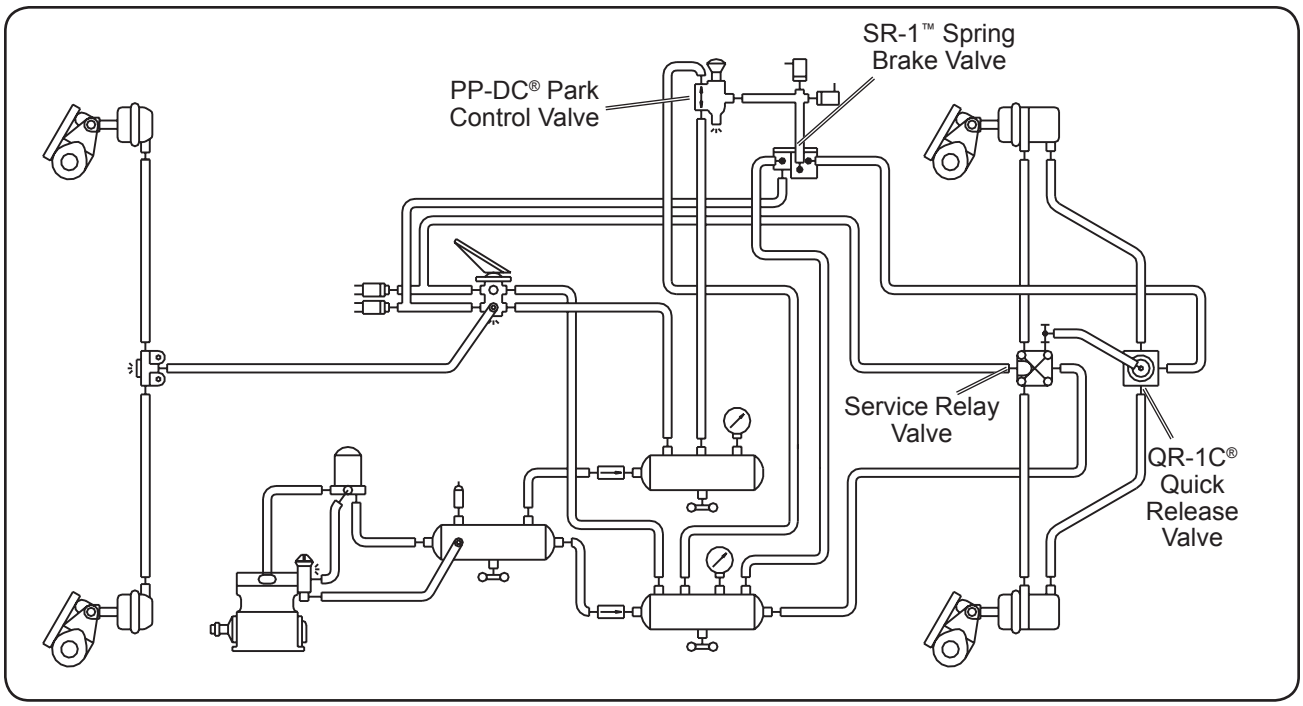

The **MV-3® dash control module** combines the functions of a PP-1® control valve and a PP-7™ trailer supply valve together into a unified device.

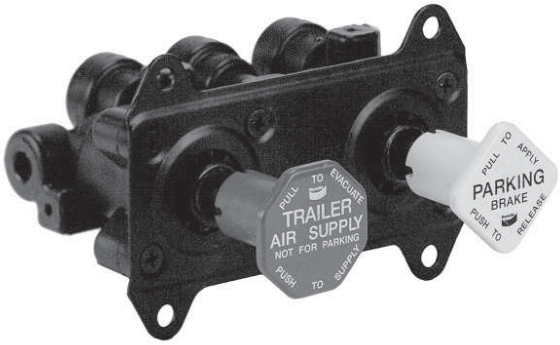

The Bendix® MV-3® dash control module is a two-button, push-pull control valve housed in a single body which includes a dual circuit supply valve and a check valve. The MV-3® valve can duplicate the functions of any existing two or three valve push-pull system and has the advantage of reduced plumbing.

The MV-3® module body, plungers and spools are made out of a non-metallic, non-corrosive material. All air connections are at the back of the module with the exception of the optional auxiliary port.

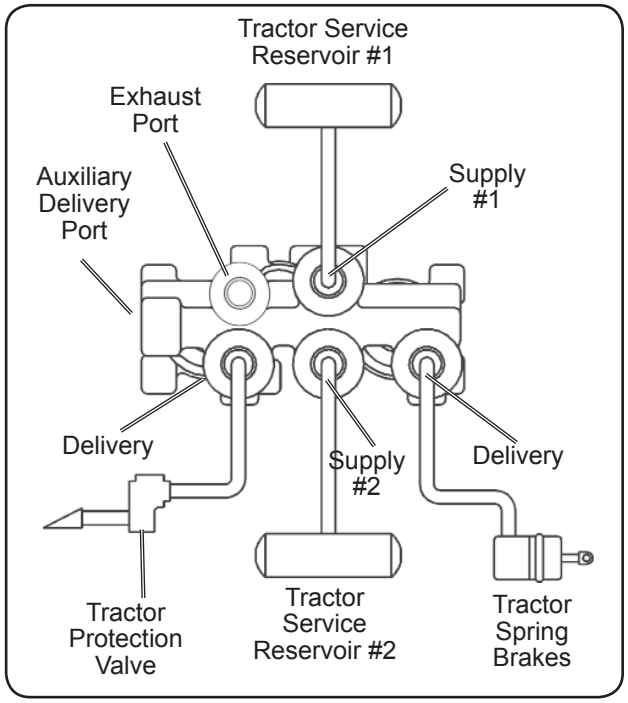

The MV-3® module provides the following functions:

- Tractor Protection Control.
- System Park.
- Trailer Park Only.
- Trailer Charge with Tractor Spring Brakes Applied (Tractor Park Only).
- Supply Reservoir Selection.
- Primary & Secondary Reservoir Connections.

Trailer Control (TC) valves are hand-operated, graduated control valves. The most common use of trailer control valves is for independent control of trailer service brakes, however, the valve can be used for any application where graduated application pressure is required.

These valves use a cam and spring mechanism to control delivery air pressure and are available with several different styles of body, clamp and handles. Some models are available with self-returning handles. Trailer control valves are often used to hold the vehicle while the vehicle's clutch and accelerator are co-ordinated. The trailer control valve should never be used for parking.

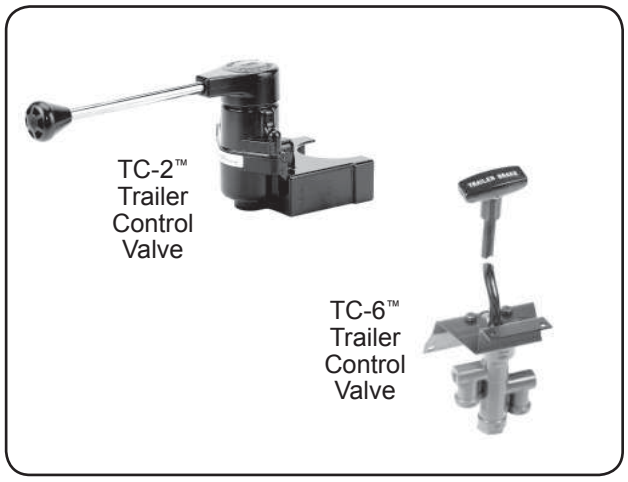

Tractor Protection Valves

The primary function of tractor protection valves (e.g. the **TP-3® tractor protection valve**) is to protect the tractor air brake system under trailer breakaway conditions and/or conditions where severe air leakage develops in the tractor or trailer. In addition, in everyday use, the valve is used to shut off the trailer service and supply lines before disconnecting the tractor from the trailer. The valve is usually mounted at the rear of the tractor cab and a dash mounted control valve.

The **TP-3DC™ tractor protection valve** integrates the functions of the TP-3® valve and one double check valve. A stop light switch port is provided and is connected to the delivery of the internal double check valve. It also has an internal single check valve that prevents air pressure from being trapped in the trailer service line, which prevents brake compounding and minimizes roll away conditions.

The **TP-5™ tractor protection valve** is designed to incorporate several pneumatic control functions within a common housing, thereby eliminating considerable interconnection piping.

It includes a combination of two double check valves and a tractor protection valve. With this valve, either brake circuit on the vehicle can be used to apply the trailer brakes. In addition, when used in conjunction with a control valve, it opens and closes the trailer service and supply lines in the same manner as a tractor protection valve. The valve also incorporates porting for the installation of the service stop lamp switch, and a quick release valve for the trailer service line.

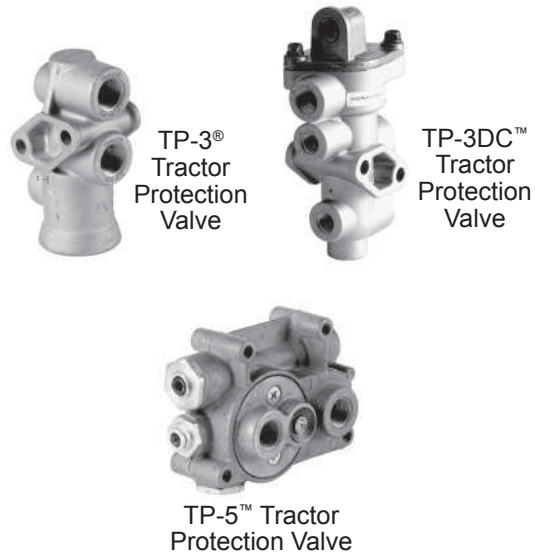

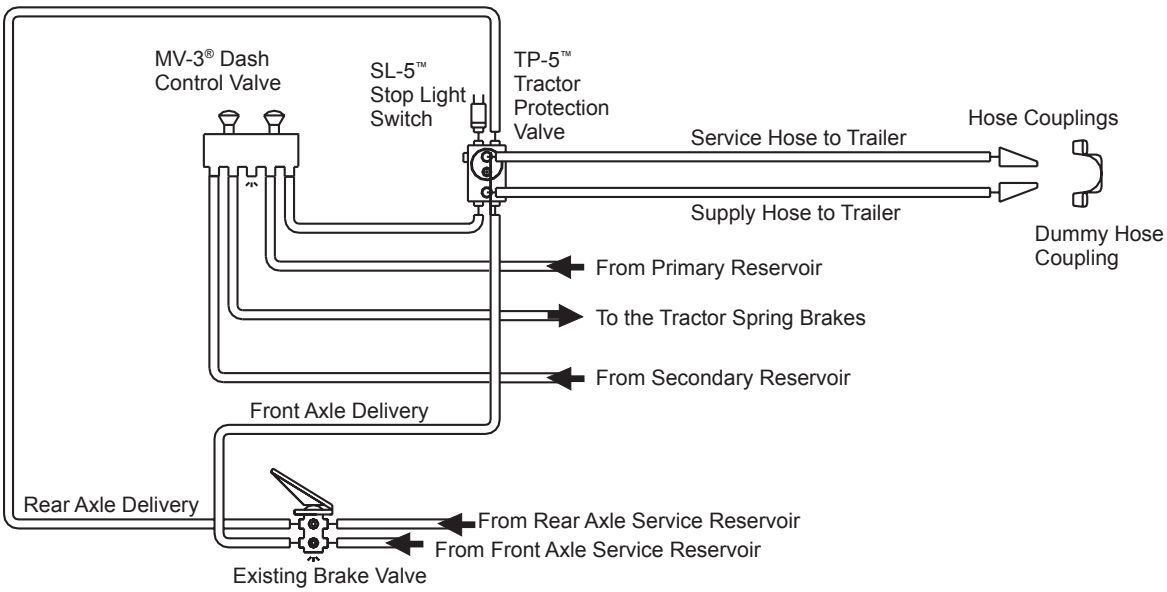

Trailer Spring Brake Valves

Trailer spring brake valves are designed for use in trailer air brake systems.

The SR-4™ trailer spring brake valve was an earlier design that used a dedicated spring brake reservoir for release of the trailer spring brakes. Note: This valve is available for service only, due to changes made in FMVSS 121 (superseded by SR-5™). All other Bendix spring brake valves use service reservoir air for trailer spring brake release.

Mounted on one of the trailer reservoirs, these valves control both the parking and emergency brake functions of the spring brakes and use internal pressure protection and check valves to isolate reservoir failures to prevent automatic application of the trailer spring brakes. An anti-compound feature is part of these valves.

With later government regulations allowing simplified system plumbing, Bendix developed the SR-5™ trailer spring brake valve. It also mounts to a reservoir on the trailer and, like the SR-2™ & SR-4™ trailer spring brake valves, it controls the trailer spring brakes, but unlike these valves, the SR-5™ trailer spring brake valve uses supply line pressure to release the trailer spring brakes. Because dedicated or isolated reservoir pressure is no longer required by law for spring brake release, the SR-5™ trailer spring brake valve system needs only one reservoir for service volume on single axle trailers. Two reservoirs are generally required for service volume requirements on tandem axle trailers.

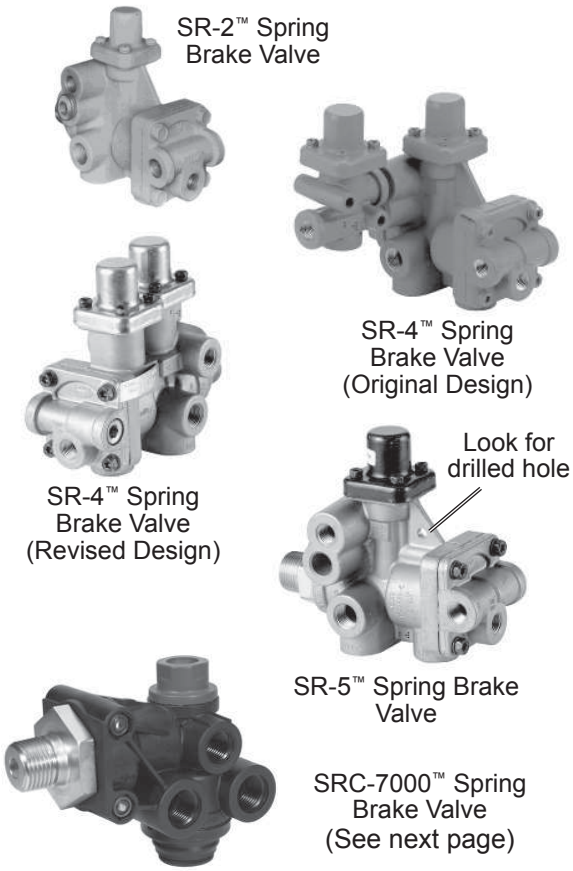

An integral anti-compound feature is part of the SR-5™ trailer spring brake valve. The SR-5™ is a "spring brake priority" trailer valve.

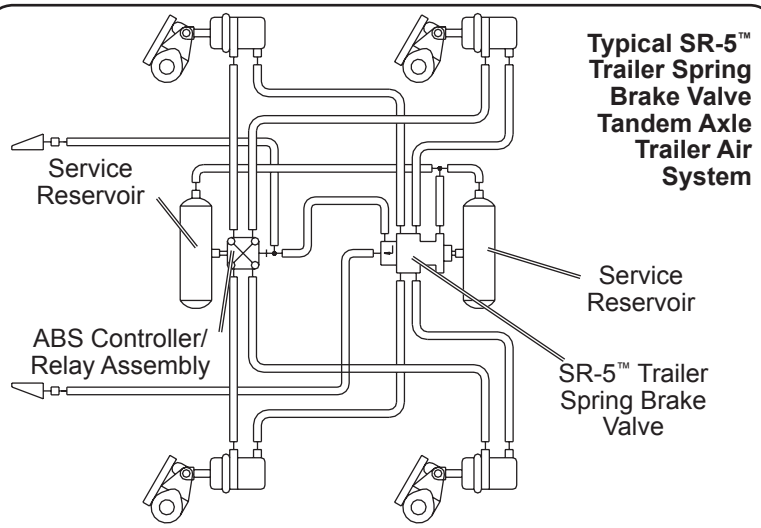

Typical SR-5™ Trailer Spring Brake Valve Tandem Axle Trailer Air System

Some System Designs use a Single Two-Compartment Reservoir

Note: The SR-5™ trailer spring brake valve looks very similar to the original design of the SR-2™ valve. Look for a hole drilled into the flat surface between the pressure protection valve and the body for positive SR-5™ trailer spring brake valve identification.

Trailer Spring Brake Valves, continued

The Bendix® **SRC-7000™ trailer spring brake valve** is a reservoir-mounted trailer valve that can control up to six spring brake actuators during parking or emergency applications. It has the following capabilities:

- Automatically applies trailer spring brakes in the event of a breakaway or trailer supply line failure.
- Protects trailer reservoir(s) air pressure in the event of a breakaway or trailer supply line failure.
- Allows no automatic trailer spring brake application with air pressure loss in trailer reservoir(s).
- Allows the trailer spring brakes to be applied and released repeatedly with a failed trailer reservoir(s):
- Anti-compounding prevents an overriding service brake signal while the trailer supply line is at atmospheric pressure.
- Does not allow service system charging if a failure occurs in the parking brake circuit.
- Muffler & Snorkel capable.

Trailer System Schematic (Featuring Bendix® SRC-7000™ Spring Brake Valve and TABS-6™ ABS)

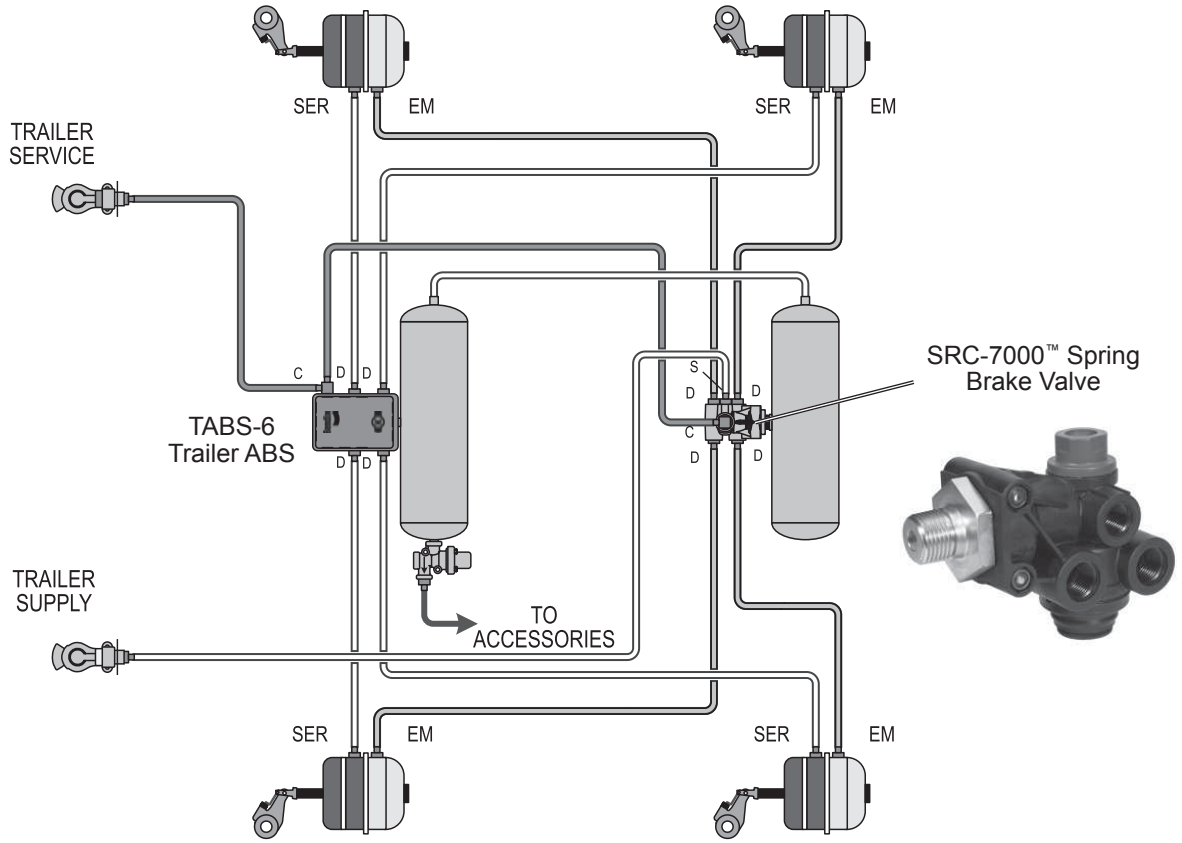

The **TE-1™ trailer emergency stop light switch** is a pressure-sensitive switch to operate the stop lights in the event of emergency trailer brake application.

Section 5: Converter Dolly Brakes

Typical components found in a converter dolly brake system are shown in this section.

See the cover pages for other system schematics.

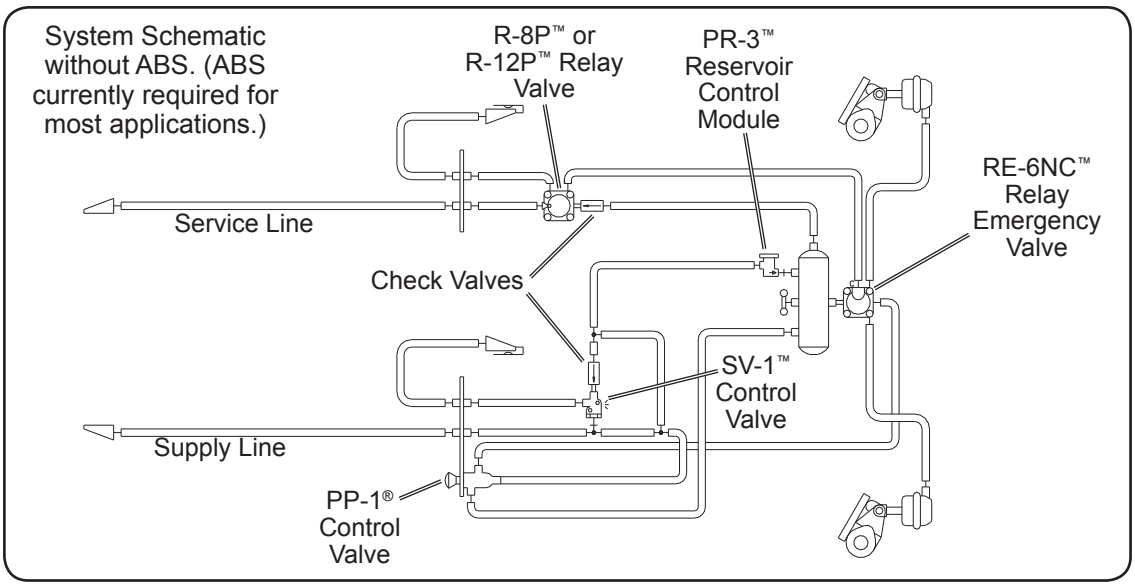

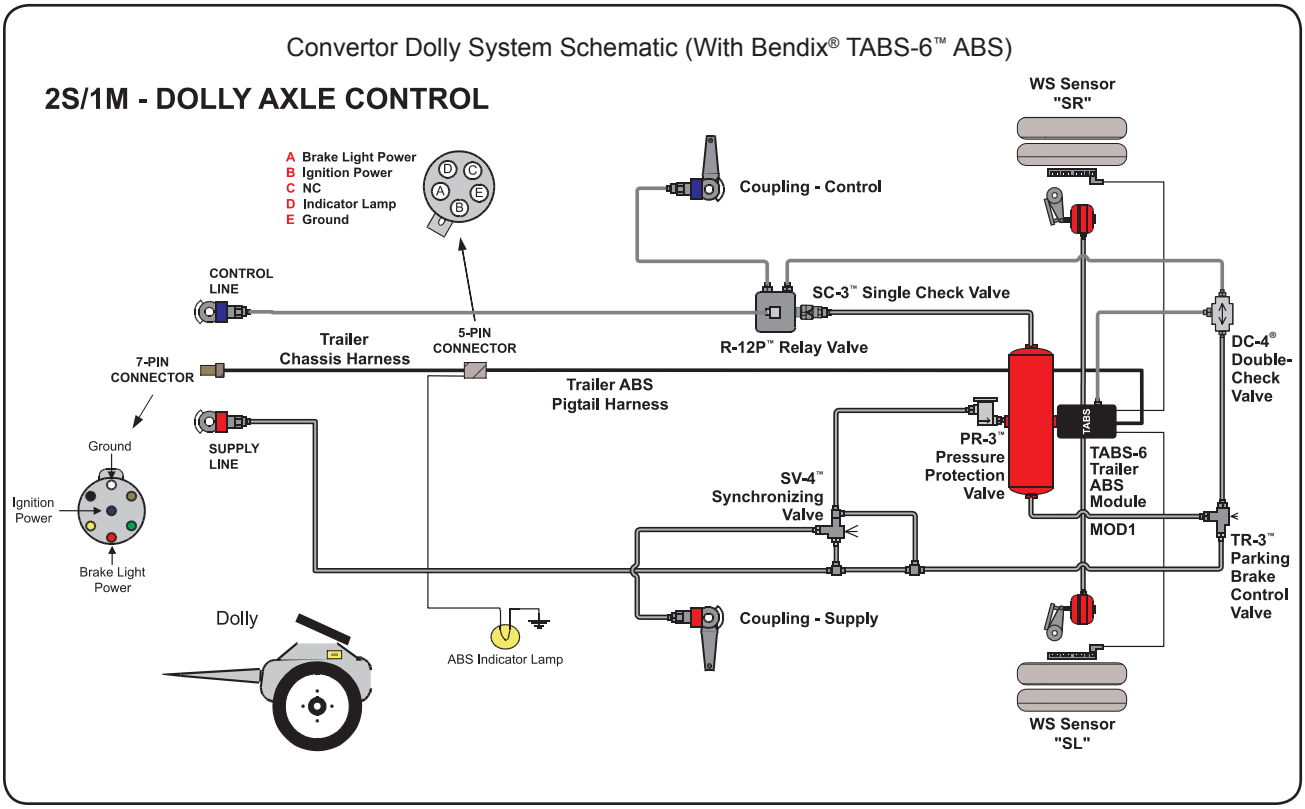

Typical Converter Dolly Components

The **R-8P™ and R-12P™ pilot relay valves** are special purpose relays designed specifically for use on trailers and converter dollies. These 0 p.s.i. crack and differential relays speed up brake application signals to provide an equal or balanced pressure signal to all trailer and dolly brakes on double and triple trailer combinations. By maintaining the same application signal across the entire train of trailers these pilot operated relay valves aid in achieving overall vehicle brake balance and stability.

The **SV-1™ synchronizing ("synchro") valve** is a remote mounted air operated, ON-OFF control valve. It is used to control air from a remote supply, has a set opening and closing pressure and can be used to delay or sequence the action of other pneumatic devices. Use of the SV-1™ synchro valve in dolly or towing trailer system prevents automatic application of the towing (lead) trailer or dolly emergency brakes in the event a breakaway occurs with the towed (rear) trailer. The **SV-4™ synchronizing valve** works similarly to the SV-1™ synchro valve, and is used on trailer converter dollies to minimize the possibility of false charging.

The **RE-6NC™ relay emergency (non-charging) valve** is used in Dolly Systems and replaces the conventional RE-6® valve. The RE-6NC™ valve is similar to the RE-6® valve but is designed to prevent direct filling of the dolly reservoir through the RE-6NC™ valve. It is generally used in conjunction with the PR-3™ pressure protection and single check valve to provide rapid dolly brake release.

The **PR-3™ reservoir control valve** is the combination of a PR-4™ pressure protection valve and a single check valve. This valve may be used in a variety of applications, however the most common is in the converter dolly brake system where it functions to delay filling of the reservoir until pressure in the supply air line exceeds 75 psi and to prevent pressure loss due to a failure in the trailer being towed.

The **PP-1® control valve** is commonly mounted to the frame and used as a brake release valve. Pushing in the PP-1® valve releases the dolly's parking brake and allows it to be moved. Since the dolly uses its own supply air to park, once it's moved, pulling out the PP-1® valve button re-parks the dolly.

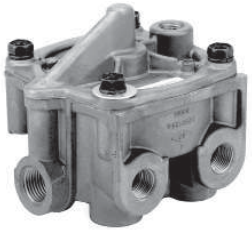

R-12P™
Relay Valve

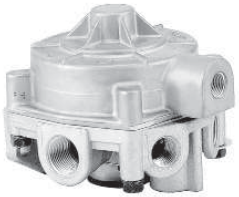

R-8P™
Relay Valve

SV-1™
Synchro Valve

SV-4™
Synchro Valve

RE-6NC™
Relay
Emergency
Valve

PR-3™
Reservoir
Control Valve

PP-1®
Control
Valve

Converter Dolly systems also widely use DC-4® double-check valves (see page 14), and TR-3™ inversion valves (see page 27).

Section 6: Antilock Braking Systems

For color schematics of tractors and trucks see the fold-out covers of this handbook.

Bendix® **Antilock Braking Systems (ABS)** use wheel speed sensors, ABS pressure modulator valves, and an **Electronic Control Unit (ECU)** to control either four or six wheels of a vehicle. Bendix ECUs are able to optimize slip between the tire and the road surface by monitoring individual wheel turning motion during braking, and adjust or pulse the brake pressure at the wheel end. When excessive wheel slip, or wheel lock-up, is detected, the ECU will activate the Pressure Modulator Valves similar to a driver pumping the brakes. The ECU, however, is able to pump the brakes on individual wheels (or pairs of wheels), independently, and with greater speed and accuracy than a driver.

In addition to the ABS function, premium models of the ECUs provide an **Automatic Traction Control (ATC)** feature. Bendix ATC can improve vehicle traction during acceleration, and lateral stability while driving through curves. ATC utilizes **Engine Torque Limiting** where the ECU communicates with the engine's controller and/or **Differential Braking** where individual wheel brake applications are used to improve vehicle traction.

Premium ECUs have a drag torque control feature which reduces driven-axle wheel slip (due to driveline inertia) by communicating with the engine's controller and increasing the engine torque.

ESP® Electronic Stability System

The ESP® functionality of the Bendix Advanced ABS system responds to a wide range of low- to high-friction surface scenarios including rollover, jackknife and loss of control. It is the recommended system for all power vehicles and especially critical for tractors pulling trailers. In the case of vehicle slide (over-steer or under-steer situations), the system will remove the throttle and then brake one or more of the "four corners of vehicle" (in addition to potentially braking the trailer), thus applying a counter-force to better align the vehicle with an appropriate path of travel. For example, in an over-steer situation, the system applies the "outside" front brake; while in an under-steer situation, the "inside" rear brake is applied.

In the case of a potential roll event, the system will remove the throttle and quickly apply the brakes to slow the vehicle combination below the threshold.

Trailer ABS

See the section beginning on page 41 for more information on trailer ABS systems and components.

ABS Components

Typical ABS components (for trucks and tractors) are:

- Wheel speed sensors (such as the Bendix® WS-24™ wheel speed sensors shown on this page). Each sensor is installed with a Bendix Sensor Clamping Sleeve. Vehicles have an exciter ring (or "tone ring") as part of the wheel assembly, and as the wheel turns, the teeth of the exciter ring pass the wheel speed sensor, generating an alternating current (AC) signal, which varies in voltage and frequency as the wheel speed changes. The ECU receives the AC signal and can then monitor how fast the wheel is turning.
- Pressure Modulator Valves (PMV) (such as the Bendix® M-32™ or M-32QR™ pressure modulator valves - shown on this page). PMVs use solenoids with the ability to apply, hold, or release the air pressure being delivered to the brakes to optimize brake performance. Four, five, or six of these valves may be used depending on ECU model and vehicle configuration.

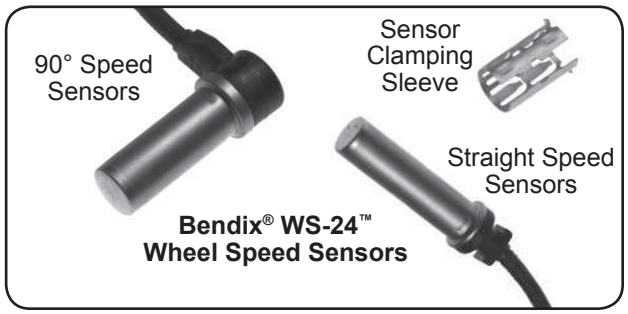

Bendix® WS-24™ Wheel Speed Sensors

Bendix® M-32™ and M-32QR™ Modulators

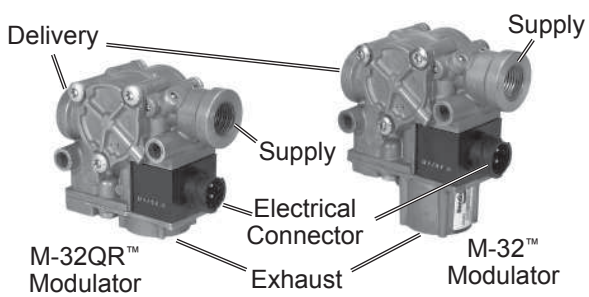

ABS Components continued ...

- Dash-mounted tractor ABS Indicator Lamp
- Service brake relay valve
- Dash-mounted trailer ABS Indicator Lamp (used on all towing vehicles manufactured after March 1, 2001)
- Optional blink code activation switch
- Optional ABS off-road switch. (Off-road feature is not typically available on all models)

Some "Premium" Bendix ABS systems utilize additional components, such as traction control valves, a dash-mounted ATC status/indicator lamp, serial communication to the engine control module, a stop lamp switch input, and optional ATC off-road switch.

With advanced ABS, the roll stability and ESP features require additional components including vehicle sensors to detect vehicle motion (lateral and yaw-rate sensors, and pressure sensors for load estimation) and driver intention (by monitoring the turning of the steering wheel).

All Bendix ECUs feature digital electronics with self test and diagnostic circuitry that continuously monitors operation of the entire antilock system including wiring continuity. A history of all diagnostic trouble codes are stored in the controller's memory and are not cleared by loss of power to the unit.

ECU controllers are typically available in frame-mounted and cab-mounted models.

Bendix Adaptive Cruise & Braking (ACB) also integrates some advanced ABS components to aid in collision avoidance: see page 46 for more information.

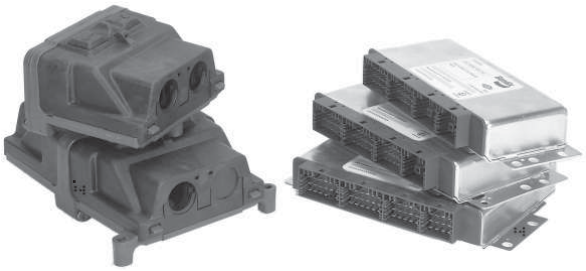

Bendix® EC-60™ ABS/ATC Controllers
(left: Frame mount, and right: Cab Mount.)

Bendix® EC-30™ ABS/ATC Controller

Advanced Bendix® ABS uses yaw and steering wheel sensors to monitor the vehicle motion. See pages 38 and 39.

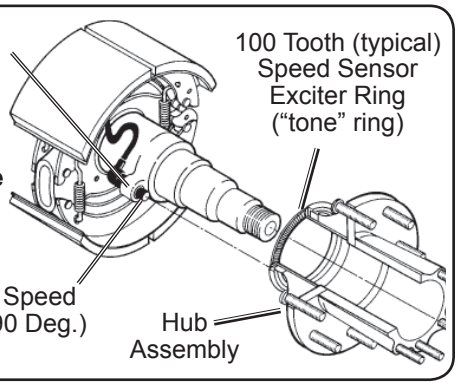

Truck and Tractor ABS Operation

As described in the introduction to this section, Bendix ABS uses wheel speed sensors, modulator valves, and an ECU. By monitoring individual wheel turning motion during braking, the ECU is able to optimize slip between the tire and the road surface by pumping the brakes on individual wheels (or pairs of wheels), independently.

Steer Axle Control

Although both wheels of the steer axle have their own wheel speed sensor and pressure modulator valve, the ECU blends the applied braking force between the two steering axle brakes. A Bendix patented brake application control, called Modified Individual Regulation (MIR), has been designed to help reduce steering wheel pull during an ABS event on road surfaces with poor traction (or areas of poor traction, e.g. asphalt road surfaces with patches of ice).

Vehicle Configurations

Depending on the number of drive axles, various numbers of sensors and modulators may be used for an ABS system. For example, a 4 sensor/4 modulator (4S/4M) system would typically be used for a single drive axle vehicle. System configurations are available for 4S/4M, 6S/6M, and 6S/5M (with the additional axle, a non-driven rear axle, having two sensors, but

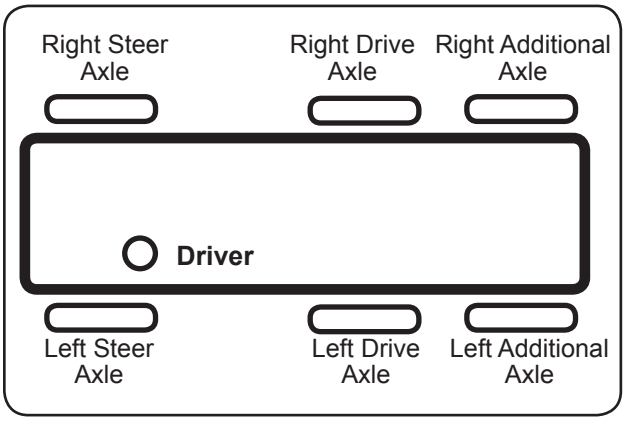

only one pressure modulator valve). In the case of a 6S/5M arrangement, the PMV controls both wheels on the additional axle. The additional axle wheels would receive equal brake pressure, based on the wheel that is currently experiencing the most wheel slip.

Normal Braking

During normal braking, air brake pressure is delivered through the ABS PMV and into the brake chamber. If the ECU does not detect excessive wheel slip, it will not activate ABS control, and the vehicle stops with normal braking.

Retarder Brake System Control

On surfaces with low traction, application of the retarder can lead to high levels of wheel slip at the drive axle wheels, which can adversely affect vehicle stability. To avoid this, some Bendix ECU controllers are designed to switch off the retarder as soon as a lock-up is detected at one (or more) of the drive axle wheels. In these cases, when the ECU is placed in the ABS off-road mode, it will switch off the retarder only when ABS is active on a steer axle wheel and a drive axle wheel.

Optional ABS Off-Road Mode

When used on some off-road surfaces, (for example, loose gravel), ABS provides superior vehicle steerability and stability, however there is the potential for stopping distances to be longer than without ABS. This is because locked-up wheels on gravel, etc. tend to plow up the road surface in front of the tires.

Bendix Premium ECUs have an optional ABS off-road control mode that more effectively accommodates these soft road conditions and shortens stopping distances while maintaining optimal vehicle steerability and stability. Care must be taken, however, not to use the ABS off-road mode on normal, paved road surfaces (since vehicle stability and steerability may be reduced), so the ABS Indicator Lamp flashes to show the driver that the ABS off-road mode is being used.

All-Wheel Drive (AWD) Vehicles

AWD vehicles with an engaged interaxle differential (steer axle to rear axle)/AWD transfer case may have negative effects on ABS performance. Optimum ABS performance is achieved when the lockable differentials are disengaged, allowing individual wheel control.

Premium ECUs can be programmed specifically for this configuration to control the differential lock/unlock solenoid in the AWD transfer case. When programmed to do so, the ECU will disengage the locked interaxle/AWD transfer case during an ABS event and reengage it once the ABS event has ended.

ATC Operation

ATC Functional Overview

Just as ABS improves vehicle stability during braking, ABS systems with ATC improve vehicle stability and traction during vehicle acceleration. The ATC function uses the same wheel speed information and modulator control as the ABS function. The ECU detects excessive drive wheel speed, compares the speed of the front, non-driven wheels, and reacts to help bring the wheel spin under control. The ECU can be configured to use engine torque limiting and/or differential braking to control wheel spin. For optimal ATC performance, both methods are recommended.

Differential Braking

Differential braking is automatically activated when drive wheel(s) on one side of the vehicle are spinning, which typically occur on asphalt road surfaces with patches of ice. The traction system will then lightly apply the brake to the drive wheel(s) that are spinning. The vehicle differential will then drive the wheels on the other side of the vehicle. Differential braking is available at vehicle speeds up to 25 MPH.

Advanced ABS

YawS tability

Yaw stability counteracts the tendency of a vehicle to spin about its vertical axis. During operation, if the friction at the tires is not sufficient to oppose lateral (side) forces, one or more of the tires can slide, causing the truck/tractor to spin. These are referred to as under-steer or over-steer situations. Generally, shorter wheelbase vehicles (tractors, for instance) have less yaw stability, while longer wheelbase vehicles (straight trucks) have greater natural yaw stability. Factors that influence yaw stability are: wheelbase, suspension, steering geometry, weight distribution front to rear, and vehicle tracking.

Stability Systems

During operation, the ECU of the Bendix Advanced ABS system constantly compares performance models to the vehicle's actual movement, using the wheel speed sensors of the ABS system, as well as lateral, yaw, and steering angle sensors. If the vehicle shows a tendency to leave an appropriate travel path, or if critical threshold values are approached, the system will intervene to assist the driver.

The ESP® Stability System

The ESP® functionality of the Bendix Advanced ABS system responds to a wide range of low- to high-friction surface scenarios including rollover, jackknife and loss of control. It is the recommended system for all power vehicles and especially critical for tractors pulling trailers. In the case of vehicle slide (over-steer or under-steer situations), the system will remove the throttle and then brake one or more of the "four corners of vehicle" (in addition to potentially braking the trailer), thus applying a counter-force to better align the vehicle with an appropriate path of travel. For example, in an over-steer situation, the system applies the "outside" front brake; while in an under-steer situation, the "inside" rear brake is applied.

In the case of a potential roll event, the system will remove the throttle and quickly apply the brakes to slow the vehicle combination below the threshold.

For color schematics of tractors and trucks see the fold-out cover of this handbook.

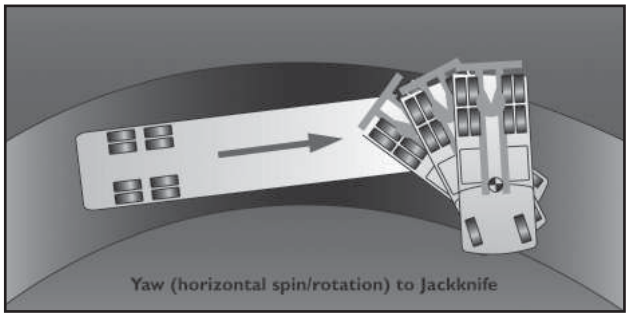

Driving Scenario:

Driving speed exceeds the threshold, and the resulting lateral force causes the vehicle to slide or jackknife on lower-friction surfaces.

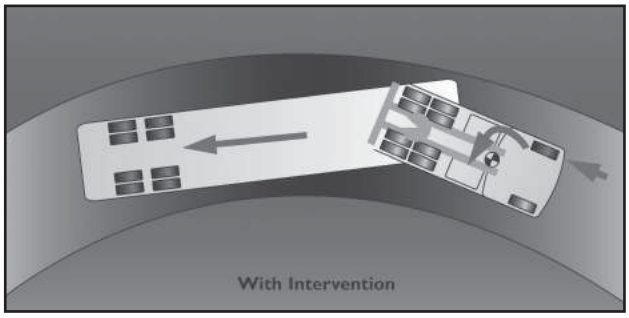

Action by Bendix Stability Solutions:

System applies the appropriate brakes to reduce speed and properly align the vehicle, thereby reducing the tendency to slide or jackknife.

Steering Angle Sensors

The sensor enables the Bendix Advanced stability system to capture the driver's steering input and intervene if a yaw correction is indicated. The sensor also provides the earliest indication of an increase in lateral acceleration leading to a potential roll event, resulting in much higher stability margin when a vehicle is equipped with a steering angle sensor.

Brake Demand Sensors

Bendix Advanced stability system was designed to supplement the drivers actions. By directly measuring driver brake demand, the system can accurately transition between driver-intended and system-intended braking pressure seamlessly. For example, if in a certain maneuver, the system calculates that 40 psi is needed and the driver is only applying 20 psi, the system compensates automatically to deliver the needed 40 psi. If, however, during the same maneuver the driver steps on the brake pedal quickly to apply a higher (above 40 psi) braking level the driver's braking input overrides the temporary change made by the system.

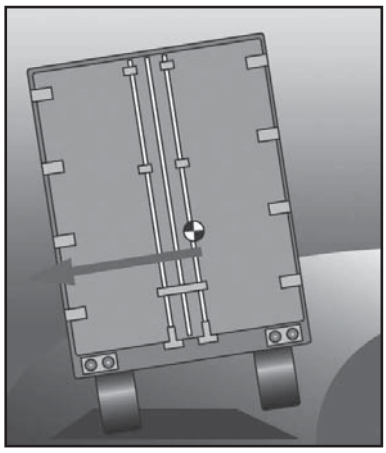

Driving Scenario:

Driving speed exceeds the threshold, creating a situation where the vehicle is prone to rollover on higher-friction surfaces.

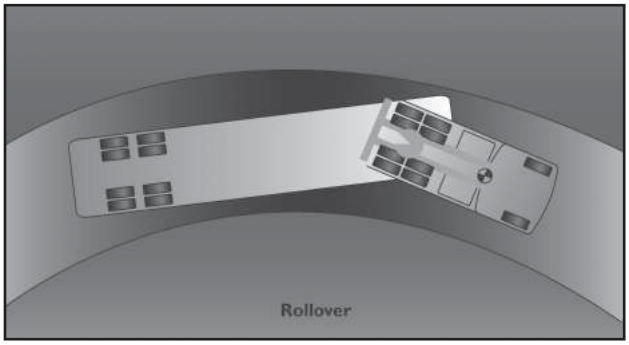

Action by Bendix Stability Solutions:

System applies the brakes to reduce speed, thereby reducing the tendency to roll over.

Stability System Effectiveness

Sense Potential Situations Quickly and Completely		ESP® Stability System
Speed	Measures the vehicle's velocity	✔
Lateral Acceleration	Measures the vehicle's tendency to roll	✔
Steering	Captures the driver's intended direction	✔
Brake Demand	Accurately supplements the driver	✔
Yaw Rate	Measures vehicle spin, and compares it to the steering intention and expected rate of turn	✔
Reaction Time and Robustness		
Multi-Level Sensing	Leading indicators aid reaction Cross checking - helps avoid false interventions	✔
Tuning	Matches data to vehicle configuration and handling characteristics	✔
Braking Control		
All Axle	Maximizes the potential to recover	✔
Individual Wheel	Aids in correcting the vehicle's orientation	✔

During high-speed maneuvers in potential rollover situations, the tandem tires of the tractor and trailer can lift off the ground. If that occurs, the steer axle brakes contribute a much larger percentage of available braking capacity because the wheels that are no longer in contact with the road surface can not provide braking force.

The ability to apply steer axle brakes individually is a fundamental requirement for yaw (spin) control. By applying brakes at any one or all of a vehicle's "Four Corners," the stability system may be able to correct the vehicle's orientation, mitigating the potential for a jackknife, spin-out or slide.

With the potential regulatory requirements for larger front brakes in the future, the steer axle's braking contribution to a vehicle's overall braking capacity and potential stability margin is expected to increase.

ABS / stability system interaction

With Bendix Advanced ABS, the ABS system is given "priority" at the wheel ends to manage wheel slip for optimal braking. The ABS system functions similarly whether the stability system or the driver applies the brakes.

How do I find out more about Advanced ABS?

Visit the ABS area of www.bendix.com, or call 1-800-AIR-BRAKE (1-800-247-2725).

Trailer ABS Components

Typical Trailer ABS components are:

- Bendix Electronic Control Units (ECUs) such as:
  - the TABS-6 standard trailer ABS module,
  - the TABS-6 Advanced (a single channel ABS trailer system) with roll stability control
  - the TABS-6 Advanced MC (a multi-channel version of the advanced trailer ABS system)
  - as well as former Bendix models including the **MC-30™, A-18™** controllers shown on this page.
- Wheel Speed Sensors (see page 35)
- Pressure Modulator Valves (also see page 35)
- ABS Indicator Lamps. The ABS indicator lamp (mandated by government regulations) is illuminated whenever there is an active diagnostic trouble code. This lamp will remain illuminated (whenever the power is on) until the condition is cleared. The lamp may also be used to display diagnostic blink codes when troubleshooting.
- Harnesses

Plus, these last three sensors are located within the module assembly for Advanced trailer ABS:

- Lateral Acceleration Sensors
- Air Suspension Pressure Sensors
- Brake Delivery Sensors
- Brake Demand Sensors

Trailer ABS Operation

Examples of our trailer ABS systems are:

Bendix® TABS-6 controller, a small, scalable, lightweight system. Our TABS-6 unit delivers the patented "Select Smart™" control technology as well as Auxiliary Design Language (ADL), which enables special functions that would normally require their own ECU. Features include:

- Normal braking (operates as a standard relay valve).
- Dolly-axle Control Mode (2S/1M), which uses the wheel behavior monitored by two wheel speed sensors to modulate the braking of one (or two) axles in an ABS event.

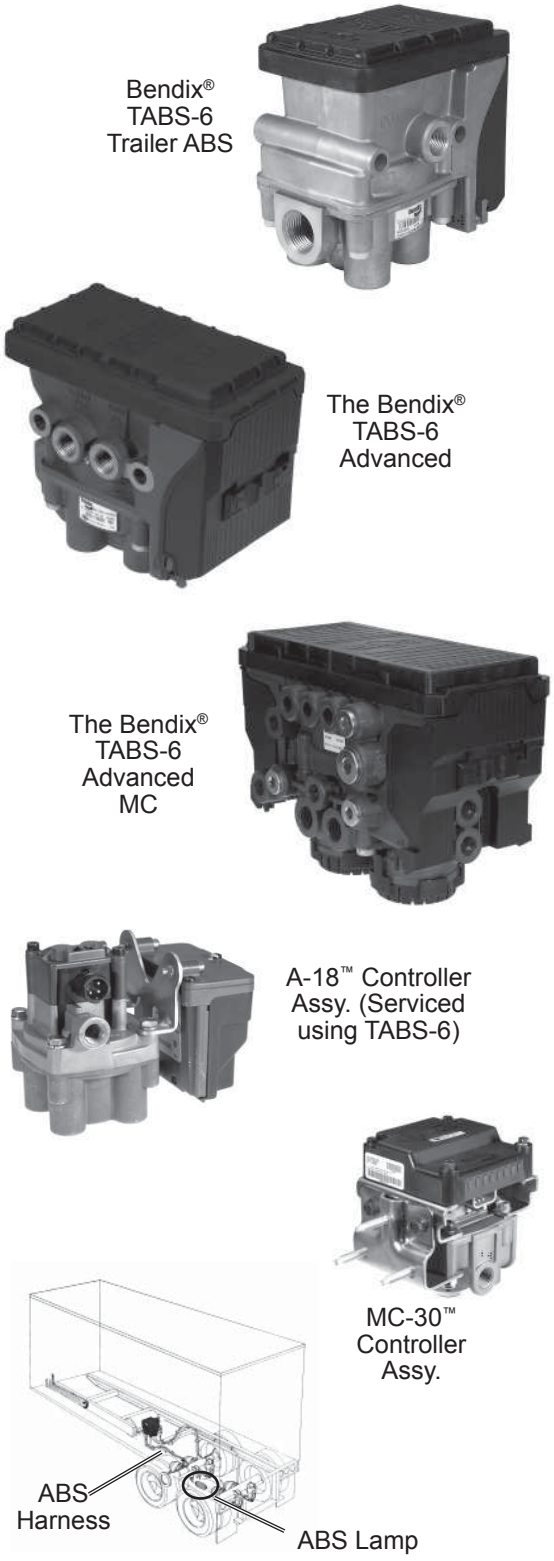

Example of 2S/1M Axle Control ABS Trailer Schematic

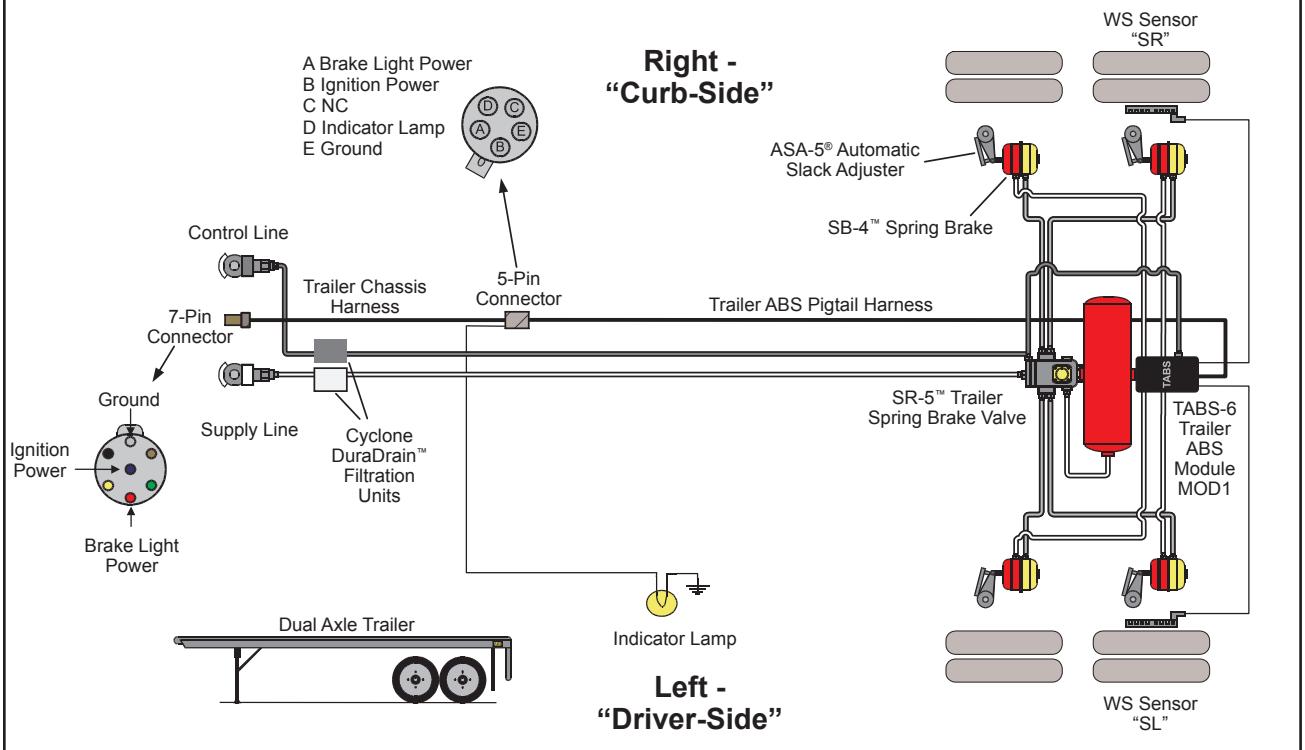

©2009 Bendix Commercial Vehicle Systems LLC • All Rights Reserved

- Axle Control Mode uses a single ABS modulator to control both sides of a given axle or axles.
- Side Control Mode uses ABS modulators to control each side of a vehicle separately. The modulator may control one or more wheels.
- Fail Safe Mode reverts the system to partial, or full, non-ABS braking in the event of certain Diagnostic Trouble Codes (DTCs) being detected.

Additional Trailer ABS Features

Some optional/additional trailer ABS features are:

- Auxiliary Design Language (ADL) which allows customized trailer features to communicate via the ABS ECU with the tractor. Potential examples are: weight, lift axle position, tire temperature and inflation status, slider pin position, refrigeration temperature, load presence, and proximity/reverse alarm.
- Auto-configuration at power-up.
- Customer-defined data storage.
- Odometer functionality, including total, trip and service interval tracking.

Advanced Trailer ABS Features

See the Schematic Diagram at the top of page 43.

Advanced trailer ABS features:

- Trailer Roll Stability Program (TRSP) that reduces the risk of trailer roll-overs during driving by automatic application of the trailer service brakes.
- Modular design with integrated Electronics Control Unit (ECU), pressure sensors, lateral acceleration sensor and Modulator Relay Valve (MRV) — eliminating external pigtail harness for these components.

  Extended operating voltage range: 8 to 32 volts.

The Bendix® TABS-6 Advanced

The Bendix® TABS-6 Advanced system is the first-ever single-channel trailer stability system. The system will intervene automatically when detecting conditions that may lead to a trailer rollover – typically before the driver realizes an intervention is needed. The system – a 2S/1M configuration provides quick and reliable stability performance while simplifying installation and maintenance, and is tank-mountable.

Example of Advanced 4S/2M ABS Trailer Schematic

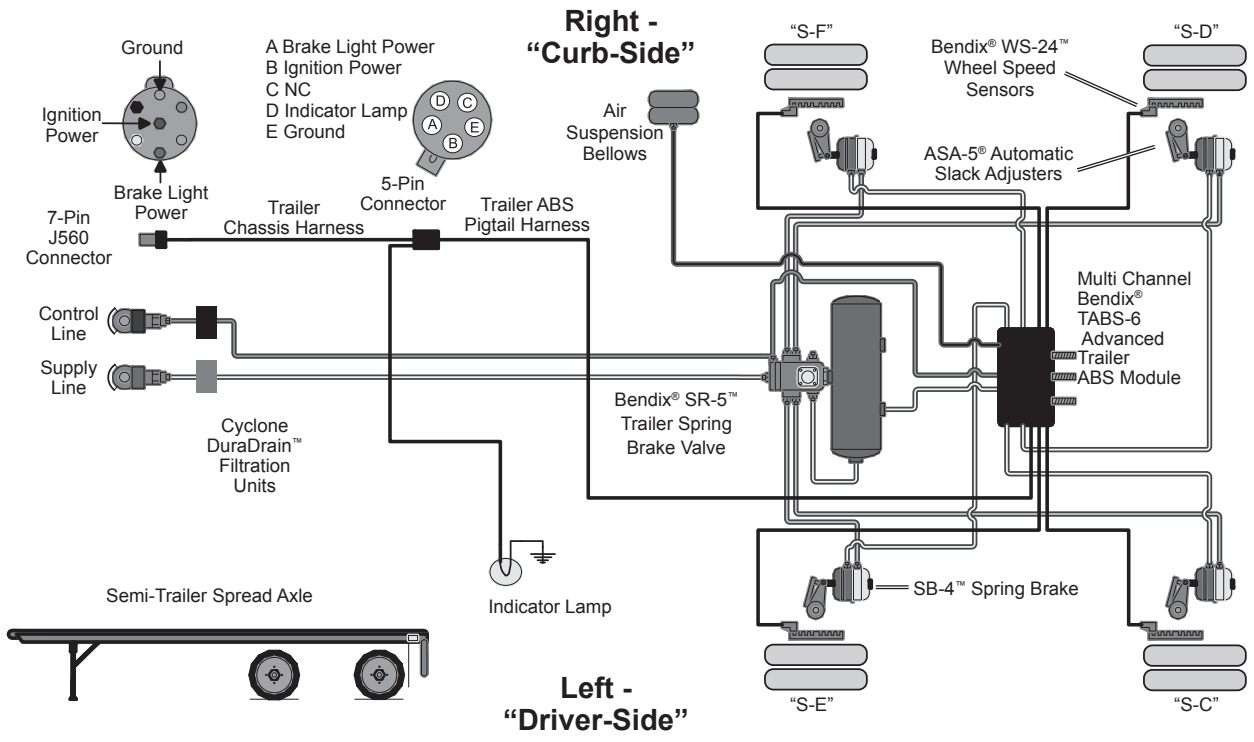

©2009 Bendix Commercial Vehicle Systems LLC • All Rights Reserved

The Bendix® TABS-6 Advanced MC

The Bendix® TABS-6 Advanced MC system provides the same trailer roll stability (TRSP) technology as Bendix® TABS-6 Advanced, along with an adaptable solution for different axle configurations that utilizes two – or three – separately controlled modulators. The Bendix® TABS-6 Advanced MC platform allows for distinct control of either side of the trailer, or it can be configured to control independent axles on a given vehicle. This system is available on configurations ranging from 2S/2M (2 wheel speed sensors/2 modulators) up to 6S/3M (6 wheel speed sensors/3 modulators.)

Controllers with PLC

Since March 1, 2001, all towing vehicles must have an in-cab trailer ABS Indicator Lamp. Trailers transmit the status of the trailer ABS over the power line to the tractor using a Power Line Carrier (PLC) signal (see right panel). Typically the signal is broadcast by the trailer ABS ECU. The application of PLC technology for the heavy vehicle industry is known as "PLC4Trucks."

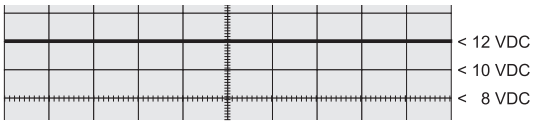

Power Line Without PLC Signal

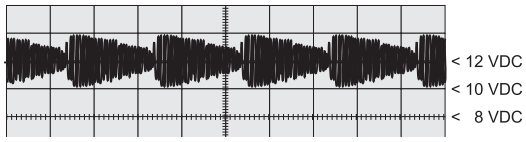

Power Line With PLC Signal

Troubleshooting Truck, Tractor and Trailer ABS

Bendix ECU controllers contain self-testing diagnostic circuitry that continuously checks for the normal operation of internal components and circuitry, as well as external ABS components and wiring. See the Service Data Sheet for the ABS controller for full troubleshooting information.

Diagnostic Trouble Codes: General

When an erroneous system condition is detected, the ECU controllers:

1. Illuminates the appropriate indicator lamp(s) and disengages part or all of the ABS and ATC functions.
2. Places the appropriate diagnostic trouble code information in the ECU memory.
3. Communicates the appropriate trouble code information over the serial communications diagnostic link as required.

Depending on the ECU, the diagnostic trouble codes may be retrieved using "blink codes" (using the dash or trailer ABS indicator lamp), by attaching to the vehicle diagnostic connector a hand-held diagnostic tool, such as the Bendix Remote Diagnostic Unit (RDU™), using a PC-based diagnostic tool such as the Bendix® ACom™ Diagnostics program, or by reading the LEDs on the front of the ECU (such as on the EC-30™ controller).

Bendix® RDU™ (Remote Diagnostic Unit) for Trucks and Tractors*

The Bendix® RDU™ tool provides the technician with a visual indication of ABS component **Diagnostic Trouble Code (DTC)** information. The RDU™ tool is specifically designed for use with Bendix ABS systems and allows the technician to:

- Troubleshoot ABS system component problems using Diagnostic Trouble Code reporting via LEDs.
- Reset Diagnostic Trouble Codes on Bendix ABS ECUs by holding a magnet over the reset in the center of the RDU™ tool (for less than 6 seconds).
- Enter the Self-Configuration Mode used by Bendix ABS ECUs by holding a magnet over the reset area for greater than 6 seconds but less than 30 seconds.

Typical Vehicle Diagnostic Connector Locations

Located on Dash Panel

Or

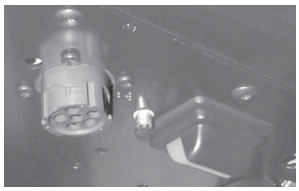

Located Under Dash Panel

Bendix® Remote Diagnostic Unit (RDU™)

(Blue Label)

LED Lights Illuminate Diagnostic Trouble Codes

Bendix® Trailer Remote Diagnostic Unit (TRDU™)

(Black Label)

LED Lights Illuminate Diagnostic Trouble Codes

TRDU shown with adapter

The trailer version of the RDU™ tool, the TRDU is now available. The TRDU is typically used along with an adapter to provide power for the unit - ask at your local Bendix parts outlet.

Bendix® ACom™ Diagnostics Software

Bendix® ACom™ Diagnostics tool is a PC-based software program and is designed to meet RP-1210 industry standards. This software provides the technician with access to all the available ECU diagnostic information and configuration capability, including: ECU information, diagnostic trouble codes and repair information, configuration (ABS, ATC, and more), wheel speed information, etc.

For free downloads of the latest ACom™ Diagnostics software or information about other RP-1210 compliant tools, go to www.bendix.com (CDs may be ordered online from the Literature Center at bendix.com).

Nexiq Bendix Application Card

Nexiq provides a Bendix application card for use with the Pro-Link tool which works for Bendix® EC-15™, EC-16™, EC-17™, EC-30™/EC-30T™ with PLC, EC-60® standard and premium and TABS-6 standard and premium Bendix ABS Controllers (but not for Advanced ABS systems). For more information on the Bendix application card visit www.bendix.com, Nexiq at www.nexiq.com, or your local authorized Bendix parts outlet.

PC-based Bendix® ACom™ Diagnostics tool

NEXIQ (MPSI) Pro-Link Tool

Pro-Link

Heavy Duty Multi Protocol Cartridge

PC Card MPSI Part Number 805013

Section 7: Additional Systems and Components

Bendix supplies many other products and systems used on commercial vehicles.

Advanced Technologies

Adaptive Cruise with Braking

Bendix® Wingman™ ACB - Active Cruise with Braking is a unique approach to adaptive cruise control technology. Using a small radar sensor mounted on the front of the truck, Bendix Wingman ACB delivers alerts to warn drivers when they are getting too close to a forward vehicle traveling in the same lane. When cruise control is on and set, Bendix® Wingman™ ACB delivers alerts and automatic interventions to help the driver maintain a set following distance behind the forward vehicle. These automatic interventions include dethrottling the truck, engaging the engine retarder, or if more deceleration is needed, applying the foundation brakes.

In addition, Bendix® Wingman™ ACB builds on the full-stability system - Bendix® ESP® stability, which helps to mitigate loss of control and rollover situations on a wide variety of road conditions. The system also delivers information fleets can use in helping to fine tune driver performance. Following distance information and stability events, along with other data, is available for download through Bendix® ACom™ diagnostic software.

The Bendix Wingman ACB - Active Cruise with Braking - system offers fleets a potentially quick return on investment (ROI), through potential accident reductions and possible fuel savings. In the future, this technology will evolve to include other driver assistance systems, such as lane departure warning, blind spot detection and other technologies, providing fleets a proactive approach to help reduce crashes and associated costs.

Tire Pressure Monitoring Systems (TPMS)

Bendix, through its acquisition of SmarTire, now offers a wireless approach to tire pressure monitoring. Using a sensor/transmitter mounted securely inside each tire, a wireless receiver and a dash-mounted display, the SmartWave® TPMS system actively measures the air pressure and temperature within the tires. This information is then sent wirelessly to a receiver mounted on the vehicle or a hand-held display and:

- Alerting the driver of a loss of air pressure or dangerously high tire temperature.
- Informing the fleet manager of tire-related issues by linking through telematics systems.
- Providing tire inflation information to maintenance personnel to help ensure optimum operating conditions.

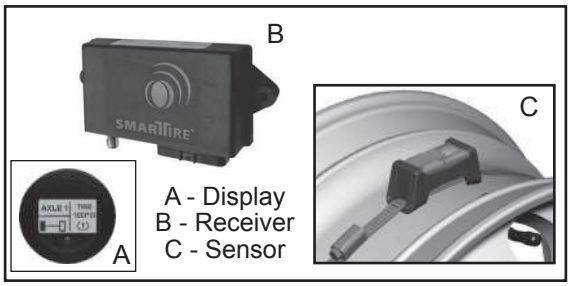

SmartWave technology simplifies and automates the tire maintenance process providing a potential reduction in fleet operating costs and helping improve safety through proactive monitoring and alerting fleet personnel of potential tire inflation and heat issues.

Industry Standard Technologies

BendixModules

Beyond component and systems engineering, Bendix develops and manages integrated vehicle solutions by partnering with vehicle manufacturers. These joint development projects use program management and engineering expertise at Bendix to help our customers develop new vehicle designs and shorten the time taken to bring these vehicles to the marketplace.

For more information, contact Bendix at:

info@bendix.com

Pre-Trip Safety Inspections

The Bendix® BVA-85™ brake valve actuator enables pre-trip brake inspections safely and easily with only one person. It uses air from the trailer supply of the Bendix® MV-3® valve to keep the foot pedal applied at an accurate 85 psi service brake application.

This valve is also used as a work brake for unique systems, e.g. to apply the service brakes for door interlock systems for transit and school bus applications, refuse interlock systems, and other severe service vehicle interlock systems including paving and construction.

BVA-85™ Brake Valve Actuator

Fan Clutches

Fan clutches are air-operated, normally engaged, on-off clutches that control the engine cooling fan. The fan clutch senses the engine coolant temperature and maintains engine temperature by engaging or disengaging the cooling fan. Using a fan clutch helps conserve fuel and engine efficiency, and it leads to faster warm-ups and a quieter vehicle. Bendix recommends snap-action electronic fan clutch controls for both performance and reliability.

The FD-L™ and FD-3™ fan clutches are designed to be fail safe. Both models feature spring engagement and air disengagement.

Most later model vehicle/engine combinations are available in kit form and contain all the necessary parts for installation. Control kits are also available, including those for shutter-equipped and air-conditioned vehicles.

FD-L™ Fan Clutch

FD-3™ Fan Clutch

Caution: Fan bolts must not enter the fan plate more than ½ inch or less than 3/8 inch.

Section 8: The Fundamentals of Air Braking

Friction

Air brakes are mechanical devices that use friction to slow or stop vehicles. An understanding of the laws of friction will be a useful introduction to the concepts behind brake design and maintenance.

Coefficient of Friction

Friction is the resistance to relative motion between any two bodies in contact, and it varies not only with different materials, but also with the condition of the materials. The amount of friction developed by any two bodies in contact is referred to as their coefficient of friction, which is the amount of force required to move the one body while it remains in contact with the other.

The coefficient of friction is expressed by the relation of the amount of force divided by the weight of the moving body. Let's look at three examples:

In Figure 1, example (a), if the moving body weighs 100 pounds, and a force of 60 pounds is required to keep it moving while it remains in contact with another body, then the coefficient of friction between the two bodies is 60% or 0.6. For (b), if 50 pounds force is necessary to keep it moving, the coefficient of friction is 50% or 0.5. For (c), if only 35 pounds force is required, the coefficient of friction is 35% or 0.35.

The coefficient of friction between any two surfaces changes with any variation in the condition of one or both surfaces. As an example, the introduction of oil or grease between two dry, flat metal surfaces will greatly reduce the friction between them, which demonstrates that the condition of these surfaces plays a great part in the actual friction they develop. This possible variation in the coefficient of friction is always present when any factor contributing to the frictional value of any material is subject to change either permanently or temporarily.

Heat is always present where friction is being developed. For example, when a bearing is not properly lubricated, the lack of lubrication causes a rise in the coefficient of friction with a resultant rise in the heat produced. The heat may reach a point where the bearing fails.

Energy of Motion Becomes Heat Energy

Since friction is the resistance to relative motion between two bodies in contact and since friction results in heat, a more complete definition of a brake would be that it is a mechanical device for retarding the motion of a vehicle by means of friction, thereby changing the energy of motion into heat energy.

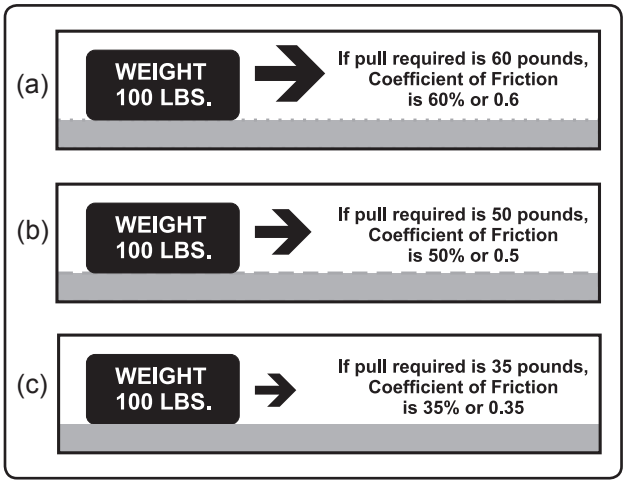

FIGURE 1 - COEFFICIENT OF FRICTION

Stated another way, when the speed of a vehicle is reduced by applying the brakes, the energy of motion is actually changed into heat energy, and the brakes must dissipate or absorb the heat developed.

Braking Force

It is difficult to appreciate the tremendous forces involved in stopping a modern commercial vehicle, particularly from the higher speeds.

A simple method of explaining this is to make a comparison between the horsepower required to accelerate a vehicle and the horsepower required to stop it. A truck with an engine capable of developing 100 horsepower will require about one minute to accelerate to 60 miles per hour. The same vehicle should be capable of easily stopping from 60 miles per hour in not more than six seconds. Ignoring the unknown quantities, such as rolling friction and wind

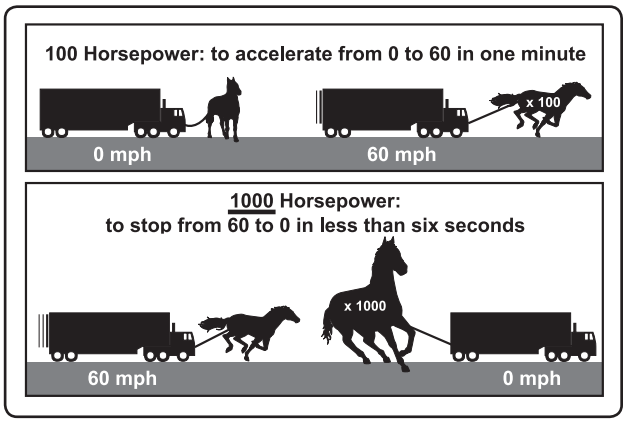

FIGURE 2 - FORCES INVOLVED IN BRAKING

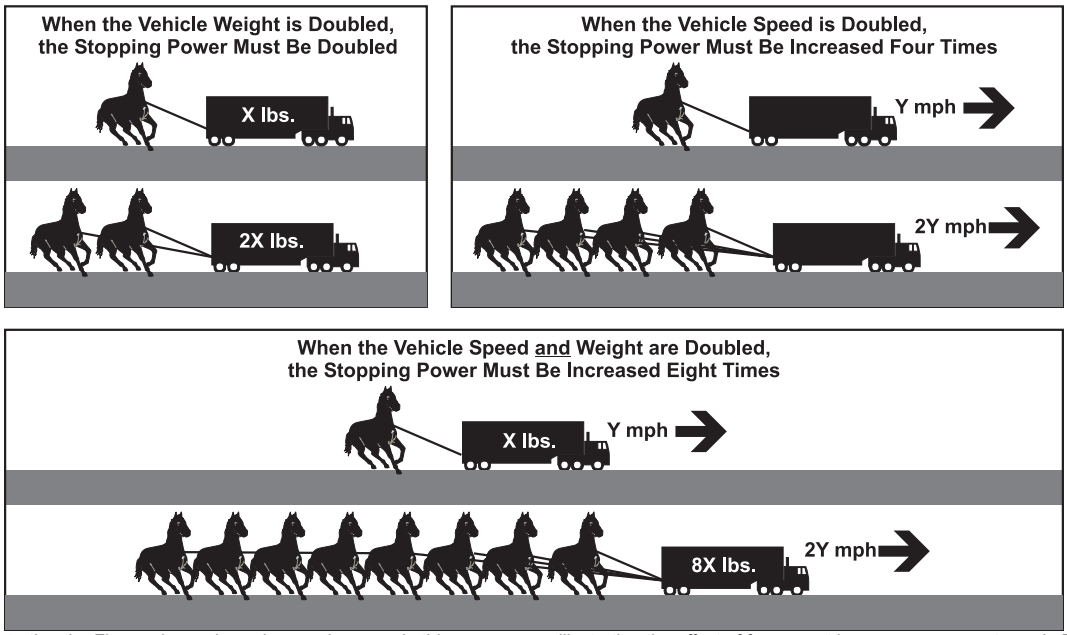

(Note: For illustration the Figure above shows horses; however in this case we are illustrating the effect of forces, not horsepower amounts, as in Figure 2.)

FIGURE 3 - EFFECT OF WEIGHT AND SPEED ON BRAKING FORCE REQUIRED

resistance which play a part in all stops, the brakes must develop the same energy in six seconds as the engine develops in 60 seconds; in other words, the brakes do the same amount of work as the engine in one-tenth the time and must develop approximately 1,000 horsepower during the stop.

Effect of Weight and Speed

Other factors to be considered are the effects on braking when the weight and speed of a vehicle are increased. If the weight of the vehicle is doubled, the energy of motion to be changed into heat energy is also doubled. If the brake cannot properly dissipate and absorb the increased heat caused by the vehicle weight (in excess of the vehicle design spec's), poor braking performance will result. Brake systems are designed to properly control a vehicle loaded up to its gross vehicle weight (GVW). Never exceed the GVW for a vehicle.

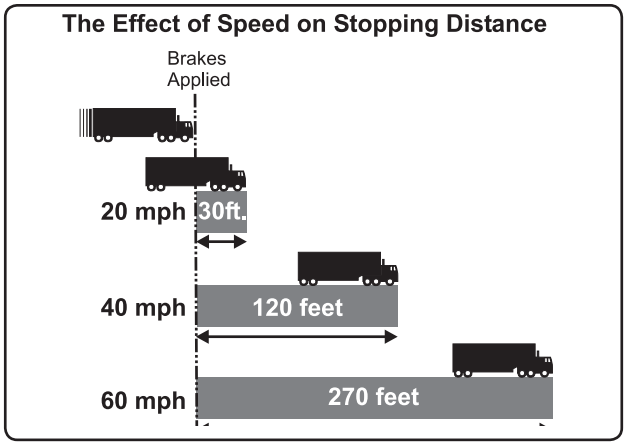

FIGURE 4 - EFFECT OF SPEED ON STOPPING DISTANCES

The effect of higher speeds on braking is much more significant. Comparing stops from a speed of 20 miles per hour with stops from a speed of 40 miles per hour, engineering calculations show there is actually four times as much energy of motion to be changed to heat energy during a stop from 40 miles per hour as there is during a stop from 20 miles per hour. Thus, if the speed is doubled, four times as much stopping power must be developed, and the brakes must absorb or dissipate four times as much heat. If the speed is three times higher, the stopping power needed is nine times higher.

It naturally follows that **if both the weight and speed of a vehicle are doubled, the stopping power must be increased eight times** and the brakes must absorb or dissipate eight times as much heat.

Another way of illustrating the effect of speed on stopping ability is to compare the stopping distance if the speed is increased without increasing the weight.

In Figure 4, the vehicle shown stops from 20 miles per hour in 30 feet. At 40 miles per hour it would typically require 120 feet to stop, and 60 miles per hour it would typically need 270 feet to stop.

Introducing both weight and speed into the comparison again, a 10,000 pound vehicle traveling 60 miles per hour has 18 times as much energy of motion as a 5,000 pound vehicle traveling at 20 miles per hour. If the same stopping power is used, a 5,000 pound vehicle which stops from 20 miles per hour in 30 feet, when loaded to 10,000 pounds and is traveling at 60 miles per hour will require 18 times (540 feet), or more, to stop. Note: Many other factors, including the road surface, brake friction material and tire condition, etc. would also affect the stopping distance.

Leverage

Having reviewed the forces involved in braking a vehicle, consideration must also be given to how these forces are developed and directed to do the braking work. Almost all braking systems make use of one of the oldest mechanical devices governing the transmission and modification of force and motion, the lever.

A lever is defined as an inflexible rod or beam capable of motion about a fixed point called a fulcrum, and it is used to transmit and modify force and motion.

Figure 5 illustrates three simple types of levers; the only difference in them being the location of the fulcrum in relation to the applied force and the delivered force. All shapes and sizes of levers used in a typical brake system are one of these three types.

The simple law of levers is that the applied force multiplied by the perpendicular distance between the line of force and the fulcrum always equals the delivered force multiplied by the perpendicular distance between the fulcrum and the line of force. Thus, with a leverage arrangement as shown in view 5(a), an applied force of 100 pounds two feet from the fulcrum will give a delivered force of 200 pounds at a point one foot from the fulcrum. With a leverage arrangement as shown in Figure 5(b), an applied force of 100 pounds three feet from the fulcrum will lift 300 pounds at a point one foot from the fulcrum.

Note that in both cases the delivered force exceeds the applied force because the applied force is farther from the fulcrum than the delivered force. With a leverage arrangement as shown in Figure 5(c), the delivered force is the farthest from the fulcrum; therefore, it is less than the applied force. If the applied force in this case is 300 pounds at a point two feet from the fulcrum, the delivered force at a point three feet from the fulcrum will be 200 pounds.

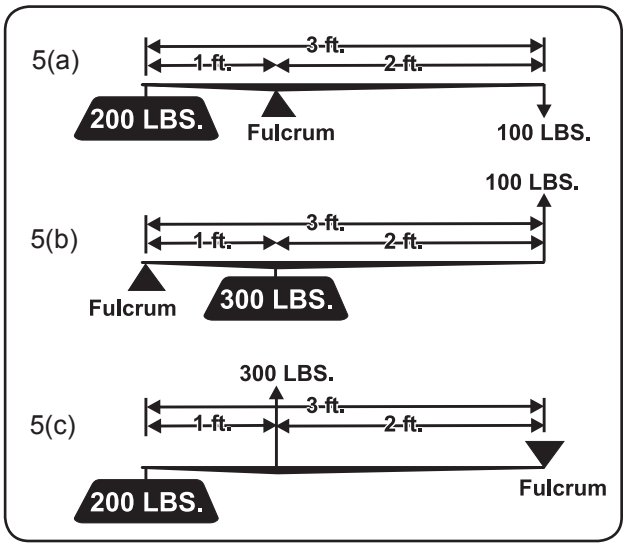

FIGURE 5 - LEVERAGE

The delivered force of any lever is determined by multiplying the applied force by the distance it is from the fulcrum and then dividing this answer by the distance the delivered force is from the fulcrum.

In determining the distance at which any force is acting on a lever, the true length of the lever arm is the perpendicular distance from the force to the fulcrum, regardless of the shape of the lever. The lever arm is always measured at right angles to the direction of the force.

The product of the force acting on a lever, multiplied by the distance the force is from the fulcrum, is called the turning moment, and when this relates to a shaft, it is called torque. The turning moment or torque is usually expressed in inch-pounds, foot-pounds, foot-tons, etc., depending upon whether the force is measured in pounds or tons and whether the distance is measured in inches or feet. As an example – a force of 100 pounds acting on a lever arm five inches long would result in a turning moment or torque of 500 inch pounds.

The most easily recognized lever in an air brake system is the slack adjuster. The length of the lever arm of a slack adjuster is always the perpendicular distance between the center line of the brake camshaft opening and the center line of the clevis pin.

Another form of lever – not always recognized – is the brake cam. All brake cams are levers and are used to transmit and modify the torque and turning motion of the brake camshaft in such a way that the brake shoes are spread and forced against the brake drum, not only in the proper direction but also with the proper force. Spreading the shoes in the proper direction, of course,

depends on the proper location of the cam in respect to the location of the brake shoes. The transmission of the proper force is partially determined by the effective lever length of the cam. If the effective lever length of the cam is too long or too short, the brake shoe force will be correspondingly too little or too much.

It is also important that the effective lever length of the cam remains constant as the lining wears and the shoes have to be spread further; otherwise, the brake performance would vary as the lining wears.

Another form of lever found in drum-brake forms of braking systems is the brake shoe. This is one of the simpler forms because it is easily recognized as a beam, fulcrumed at one end on the hinge pin, which forces the brake lining against the drum when the brake cam force is applied to the other end.

Perhaps the least easily recognized lever in a drum brake system is the relation of the brake drum diameter to the tire diameter. In order to understand this fully it must be remembered that although the brakes stop the brake drums and wheels, it is always the tires and road surface that stop the vehicle. This is clearly demonstrated when quick stops are attempted on wet or icy roads. Under these conditions the brake equipment may still be as efficient as ever in stopping the wheels, but its ability to stop the vehicle quickly diminishes because there is not sufficient friction between the tire and road to develop the necessary retarding force.

Returning to the principles of leverage involved in the relation of the tire and brake drum size, the retarding force developed by the brake shoes acting against the drum is working on an effective lever length of the brake drum radius. Counteracting this is the retarding force developed between the tire and the road, working on an effective lever length of the rolling radius of the tire. Since it is not practical to have brake drums as large as the tires, the principles of leverage require development of a greater retarding force between the brake shoes and the drums than between the tire and the road. Also, since a rubber tire on a smooth, dry road surface has a higher coefficient of friction than brake lining against a brake drum, it is necessary to develop additional retarding force between the brake shoes and brake drum in order to overcome the difference in friction.

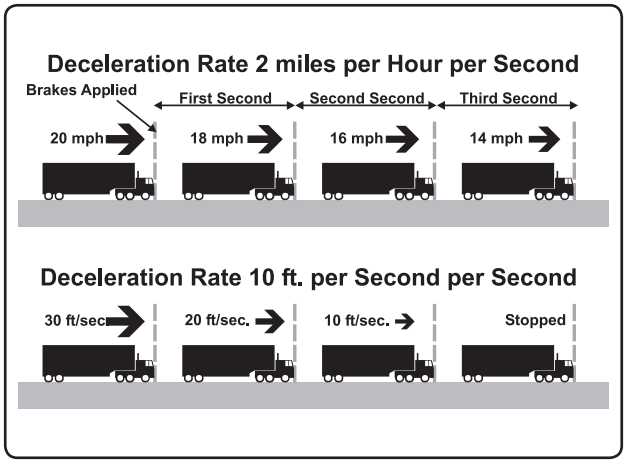

FIGURE 6 - DECELERATION

Deceleration

In discussing brakes, the term deceleration is often used. This term expresses the actual rate at which vehicle speed is reduced and usually denotes the speed being reduced each second, in terms of miles per hour or feet per second.

As an example as shown in Figure 6 - if a vehicle is moving at the rate of 20 miles per hour, and one second later its speed is only 18 miles per hour, the vehicle has reduced its speed by two miles per hour during one second, its deceleration rate is two miles per hour per second.

In the same way, if a vehicle is moving at a rate of 30 feet per second, and one second later its speed is only 20 feet per second, then it is decelerating at the rate of ten feet per second per second.

Therefore, the change in the rate of speed of a vehicle during a slowdown or stop is expressed by first stating the rate of speed being lost, such as miles per hour or feet per second, and then by stating the time required for this rate of speed to be lost.

Thus, in examining the expression covering a deceleration rate of say, “ten feet per second per second,” the first part – “ten feet per second” – is the rate of speed being lost, and the second part – “per second” – is the time in which the loss of ten feet per second takes place.

If a vehicle is moving at a known rate, and is decelerating at a known rate, the stopping time will be the initial speed divided by the deceleration rate, provided both the rate of speed and the deceleration rate are expressed on the same basis. As an example – if a vehicle is moving at the rate of 30 feet per

Deceleration (continued)

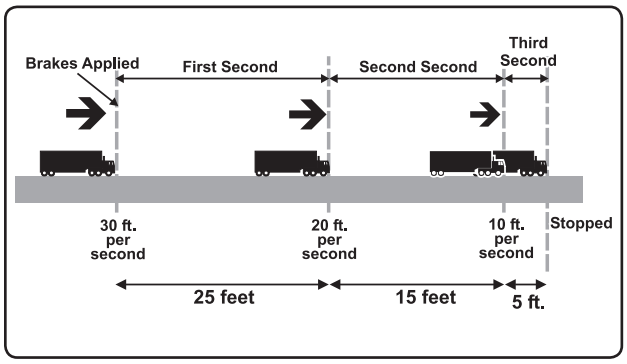

FIGURE 7 - DECELERATION AT 10 FEET PER SECOND PER SECOND

second and is decelerating at the rate of ten feet per second, the stopping time will be the initial speed of 30 feet per second divided by the deceleration rate of ten feet per second per second, or a stopping time of three seconds.

This perhaps can be more easily understood if explained in the following manner; if a vehicle is moving at the rate of 30 feet per second and begins to decelerate at the rate of ten feet per second per second, at the end of the first second it will be traveling 20 feet per second; at the end of the second second, it will be traveling ten feet per second, and at the end of the third second, it will be stopped. Thus, by losing speed at the rate of ten feet per second per second, it would lose its initial speed of 30 feet per second in three seconds.

Similarly, if the initial speed is 20 miles per hour and the deceleration rate is two miles per hour per second, the stopping time will be ten seconds.

One important thing to remember in respect to stopping vehicles is the fact that while the deceleration rate may be constant for each second during the stop, the distance the vehicle travels each second during the stop varies greatly as the speed decreases.

This is illustrated in Figure 7 which also shows a vehicle decelerating at the rate of ten feet per second per second from an initial speed of 30 feet per second, but the positions of the vehicles are shown in relation to the distance traveled each second during the stop. This shows that although the rate of deceleration remains constant throughout the stop, the vehicle actually travels 25 feet during the first second after the brakes were applied, 15 feet during the second second, and only five feet during the third second.

The distance being traveled each second during the stop is always greater at the beginning of the stop. To keep stopping distance as short as possible, it is important that the brakes become fully effective when the pedal is depressed by the driver.

Any time lost between the instant the brake pedal is depressed and the instant actual deceleration begins is important because the vehicle continues to travel at close to its initial speed. In this case, the loss of only one second between the instant the driver depresses the brake pedal and the point where the brakes are really applied will result in lengthening the actual stopping distance by 30 feet. Thus, if four seconds instead of three elapse between the instant the driver depresses the brake pedal and the instant the vehicle stops, the actual stopping distance will be increased from 45 feet to 75 feet. In other words, by reducing the stopping time under these conditions by only one second or 25%, the actual stopping distance is reduced by 30 feet or 40%.

It is this part of brake fundamentals which is not often considered in evaluating brake performance, particularly when different forms of brakes are involved. A common method of testing brakes is by the use of a decelerometer–a device that determines the maximum rate of deceleration developed during a stop and which shows a calculated stopping distance from a speed of 20 miles per hour based on the maximum rate of deceleration developed during a stop. Such instruments do not, however, make allowances for lost time before the braking system develops full power and therefore are not suitable for analyzing time lag factors in brake performance.

The true performance of any type of brake system in terms of stopping time or stopping distance can only be determined by actually measuring the time and distance the vehicle travels from the instant the driver depresses the brake pedal to the point where the vehicle actually stops. Such tests can, of course, be made comparative only by using instruments to determine accurately the speed of the vehicle at the instant the brake pedal is depressed.

In so far as brakes are concerned, a driver is mainly interested in the amount of time and the distance required to bring the vehicle safely to a stop under emergency conditions as measured from the instant he or she depresses the brake pedal. Any lag in the time between the instant the brake pedal is depressed, and the instant the brakes apply, affects stopping distance.

The Fundamentals of Compressed Air

Compressed air is air which has been forced into a smaller space than that which it would ordinarily occupy in its free or atmospheric state.

Free air which we breathe – or atmosphere – is normally always under pressure because of the weight of the air above it. This pressure amounts to 14.7 pounds per square inch at sea level, and it decreases as the altitude increases.

The normal atmospheric pressure of 14.7 pounds per square inch is usually ignored and the atmosphere is considered as being free air under no pressure. Thus, the pressure of compressed air is commonly indicated by stating the amount the pressure, in pounds per square inch, is above the atmosphere. This is the reason air pressure gauges register zero when connected only to atmosphere.

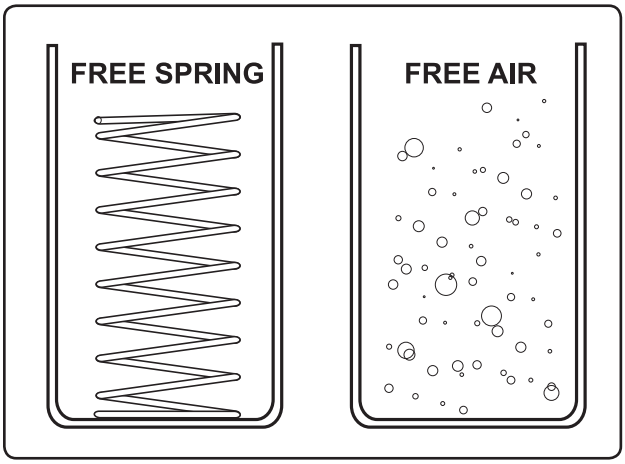

FIGURE 8 - FREE SPRING / FREE AIR

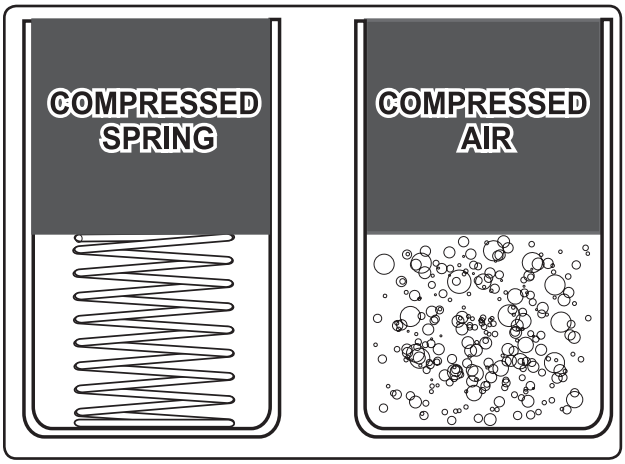

FIGURE 9 - COMPRESSED SPRING / COMPRESSED AIR

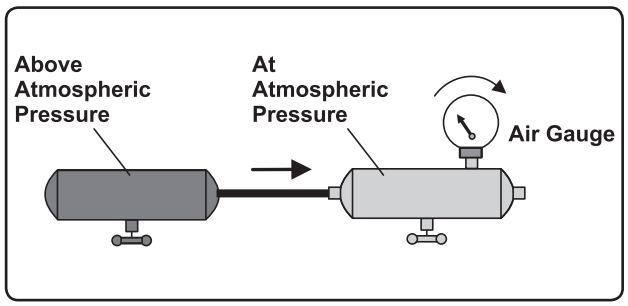

FIGURE 10 - FREE SPRING / FREE AIR

FREE SPRING – FREE AIR

The energy of compressed air is best compared to the energy of a coiled spring. Figure 8 shows a coiled spring in its free position and air in its free or atmospheric state.

COMPRESSED SPRING – COMPRESSED AIR

When the spring is compressed, as shown in Figure 9, energy is stored in it. Similarly when free air is compressed, energy is stored in the air. This energy can be used to do work, and due to the flexibility of air such energy can be stored in a relatively small space.

See Figure 10. If two reservoirs are connected and one contains air above atmospheric pressure and the other contains air at only atmospheric pressure, air will flow from the reservoir with the higher pressure until the pressures in both reservoirs equalize or until the flow is interrupted by some outside force, such as the closing of a valve in the connecting line. This is similar to the action of liquids, except that pressure is the controlling medium, whereas, the force of gravity would ordinarily be the controlling medium in the case of liquids.

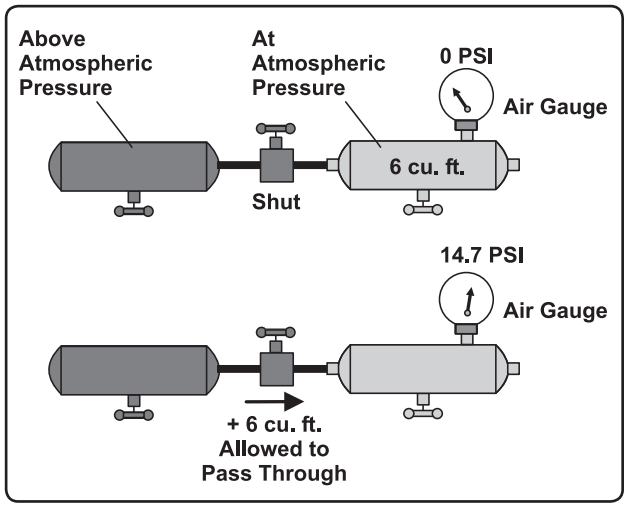

FIGURE 11 - FREE SPRING / FREE AIR

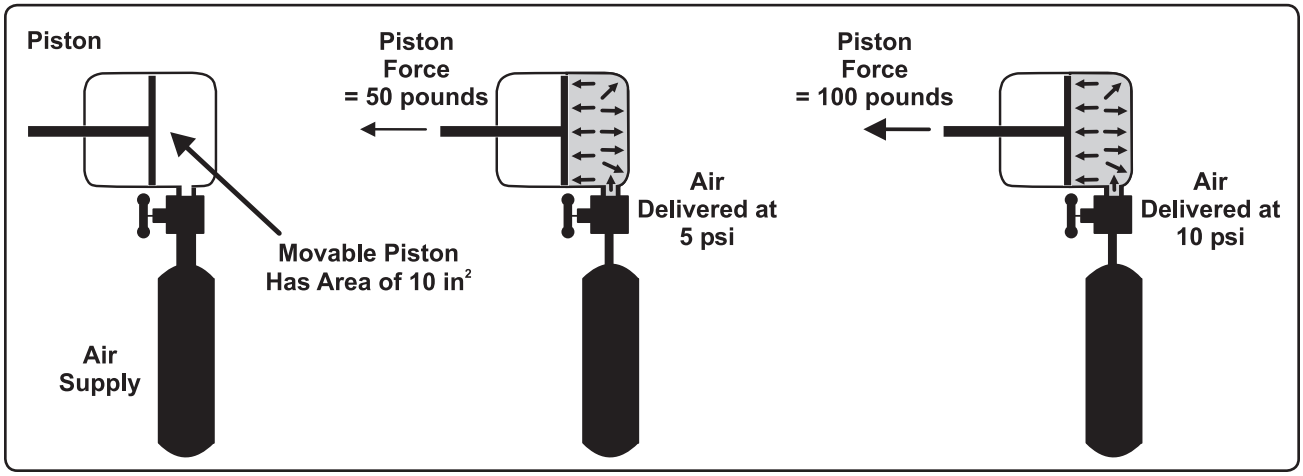

FIGURE 12 - FUNDAMENTALS OF COMPRESSED AIR

We saw earlier that normal atmospheric air is really at a pressure of 14.7 pounds per square inch. In Figure 11, the reservoir on the right has a volume of six cubic feet. When another six cubic feet of air is added into it, the gauge pressure of the air in the reservoir, which originally read zero, will rise to 14.7 pounds. It follows that each time a quantity of free air equal to the volume of the reservoir is forced into it, the gauge pressure will rise another 14.7 pounds per square inch.

In Figure 12, we see a piston with an air-tight chamber behind it. When compressed air enters the chamber it will cause the piston to move until it encounters a resistance equal to the force developed by the compressed air. Because the air pressure is based on pounds per square inch, it follows that the compressed air will develop a force in pounds on the movable object equal to the product of the air pressure multiplied by the effective area of the movable object. If a piston or a flexible diaphragm in a brake chamber has an area of ten square inches and air at five pounds per square inch pressure is acting on the piston or diaphragm, the developed force will be 50 pounds. Similarly, if air at a pressure of ten pounds per square inch is acting upon it, a force of 100 pounds will be developed.

One key point is that the quantity of air acting on the piston or diaphragm does not affect the force developed. The only factors involved are the air pressure and the area of the piston or diaphragm on which the air pressure is acting. This means that we can control the force applied by the braking system by controlling the air pressure.

The pressure exerted by compressed air is not only developed in all directions, but it is also equal in all directions. The compressed air in a reservoir exerts pressure equally in all directions against the entire inside surface of the reservoir (the pressure of the compressed air being overcome by the mechanical strength of the reservoir walls). Similarly, the force developed by the air pressure acting on one side of a piston or a diaphragm may be overcome by an opposing force acting on the opposite side, and the opposing force may be compressed air or it may be mechanical. If the opposing forces are equal, a balanced condition is reached and there is no movement of the piston or diaphragm. If the opposing forces are not equal, the piston or diaphragm will move, if possible, to assume a position where the opposing forces are equal. See Figure 13.

This law of balanced pressures and forces is the basic principle governing the design and operation of the control and actuating devices in an air brake system.

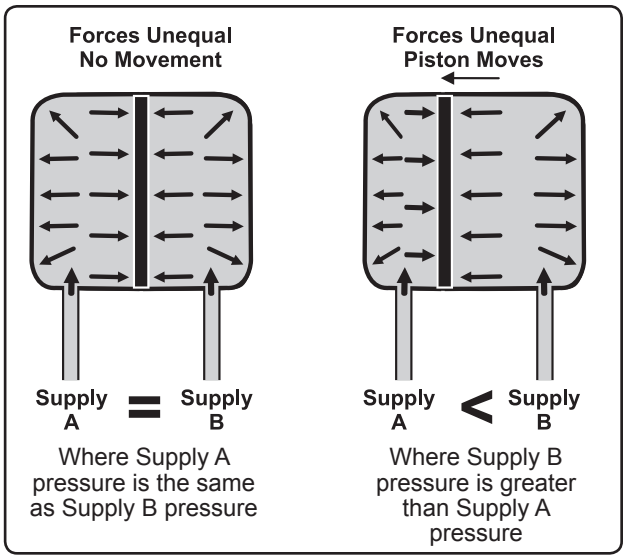

FIGURE 13 - FUNDAMENTALS OF COMPRESSED AIR

The Fundamentals of Compressed Air Brakes

Compressor, Reservoir and Brake Valve

In an air brake system, the compressor supplies the compressed air for brake operation by taking free air and compressing it to 100-120 P.S.I. (Maximum pressure in an air brake system is generally 150 P.S.I.)

The compressed air passes from the compressor into the reservoir and the air brake system where it (and its energy) are stored until needed by the driver for a brake application.

Service Brake System

When the brake valve is operated by the driver, air flows to the chambers where its energy is transformed into the mechanical force and motion necessary to apply the brakes.

Braking Forces - Effect of Air Pressure

This control of the braking force by controlling the air pressure in the chambers is illustrated in Figure 14. It shows the resulting forces in pounds of various air pressures with a chamber having an effective diaphragm area of 24 square inches.

The important point is that the air pressure in a brake chamber can be controlled so the brake chamber will develop the required force.

Braking Forces - Effect of Brake Chamber Size

Different sizes of vehicles and different axles of the same vehicle may require different braking forces, depending on the weight of the vehicle or the weight distribution between axles of the same vehicle. These variations in the braking force are design variations because the maximum and minimum force required must be properly provided before good performance can be obtained throughout the entire braking range. [Note: Rotochambers are larger, heavier style of brake chamber typically used on heavier, off-road equipment where their constant output and longer push-rod stroke is useful.]

Figure 15 illustrates the developed force in pounds of each of several different sizes of brake and rotochambers when supplied with air pressure at 60 pounds per square inch. The effective area of the different brake chambers generally varies from six square inches to 36 square inches and their developed force at 60 pounds air pressure generally varies from 360 pounds to 2,160 pounds. This permits the choice of a chamber size suitable for properly operating any size or type of foundation brake.

Typical 'Type-24' Brake Chamber Having an Effective Diaphragm Area of 24 Square Inches.

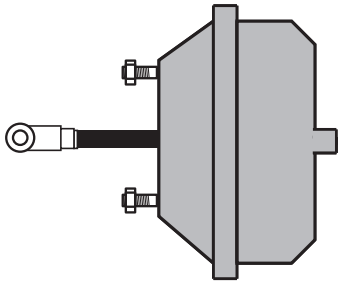

Air Pressure (PSI)	5	10	20	30	40	60	80	100
Developed Force (PSI)	120	240	480	720	960	1440	1920	2400

FIGURE 14 - BRAKING FORCES-EFFECT OF AIR PRESSURE

Force Developed by Various Size Brake and Rotochambers at 30 and 60 psi.

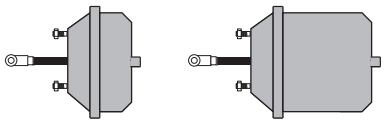

Clamp Ring Brake Chamber or Rotochamber	6	9	12	16	20	24	30	36	50*
Effective Area of Diaphragm (square in.)	6	9	12	16	20	24	30	36	50
Pounds of Force Developed @ 30 psi	180	270	360	480	600	720	900	1090	1500
Pounds of Force Developed @ 60 psi	360	540	720	960	1200	1440	1800	2160	3000

* Rotochamber only

FIGURE 15 - BRAKING FORCES-EFFECT OF BRAKE CHAMBER SIZE

Braking Forces - Effect of Slack Adjuster Arm Length

Figure 16 illustrates how the principles of leverage apply when a brake chamber and slack adjuster combination is being selected to meet specific requirements.

With the same brake chamber force of 1,000 pounds, the torque on the brake camshaft can be increased from 4,000 inch pounds to 6,000 inch pounds merely by using a slack adjuster with a 6” arm instead of one with a 4” arm.

In an S-Cam foundation brake, the full range of braking forces for any vehicle is provided by the use of different sizes of brake chambers and slack adjusters.

A term which is used to express the relation of the brake chamber size and slack adjuster arm length is “AL” factor. The “AL” factor differs from torque or turning moment in that only the variable factors which determine the force are expressed. The reason for this is that an air pressure of 60 pounds is generally used in calculating air braking forces and therefore, is considered constant. The length of the slack adjuster lever arm and the size or effective area of the brake chamber acting on the slack adjuster are the two variables altered to meet braking requirements. The product of the effective area of the brake chamber and the length of the slack adjuster arm is expressed as the “AL” factor, which, when multiplied by the 60 pounds air pressure used in making brake calculations, determines the torque on the brake camshaft. As an example: If a brake chamber having an effective area of 16 square inches is acting on a slack adjuster having an arm length of five inches, the “AL” factor is 80. The actual torque on the brake camshaft is therefore the “AL” factor (80) multiplied by the air pressure used in making brake calculations (60), or 4,800 inch pounds.

Bendix Air Disc Brakes

Bendix Air Disc Brakes (ADB) are “floating caliper” pneumatic disc brakes for use as the foundation braking on all axles of heavy commercial vehicles and trailers. Air Disc Brakes are easier to service than traditional S-Cam brakes. Air Disc Brakes are available in models with or without spring brakes.

The function of the ADB is to convert the air pressure applied when the driver applies the brakes into braking force against the rotor on the vehicle wheel. This is done by the application of air from the foot brake or relay valve entering the brake chamber causing the plate to move the push rod outwards. The push rod exerts force on the lever (see Figure 17) and this force is transferred and multiplied as it turns around the eccentric bearing. The bearing and the connected actuating beam move outward, overcoming the force of the two return springs. The force is then transferred to the two threaded tubes, tappets and finally to the inner and outer brake pads.

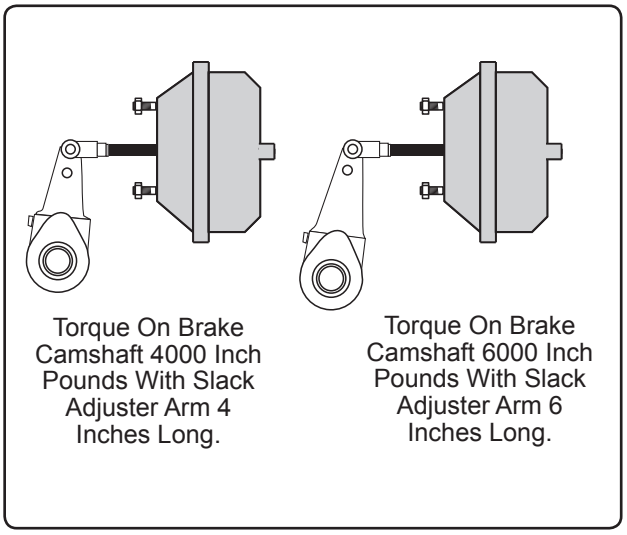

FIGURE 16 - BRAKING FORCES-EFFECT OF SLACK ADJUSTER ARM LENGTH

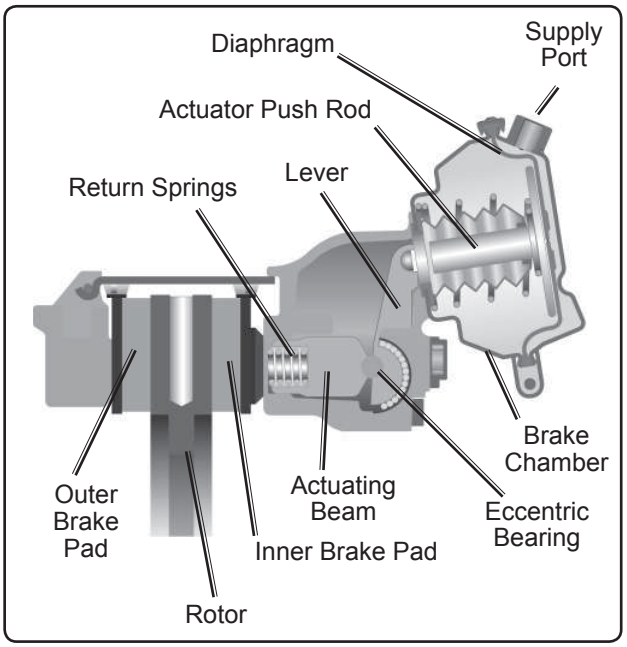

FIGURE 17 - AIR DISC BRAKE - CUT-AWAY VIEW

Air Brake System Balance

The air brake system is one of the most important safety systems on a vehicle. Air brake systems are carefully designed with valves, tubing or hoses, etc., selected to result in balanced vehicle braking performance - one where all the brakes apply as close to simultaneously as possible and with the desired amount of force. Proper vehicle maintenance will result in the original performance being retained, and so component replacement and general brake system maintenance are very important. Routine system maintenance operations should be performed with this in mind.

Two major areas that we cover here are:

I. Pneumatic (Air) and II. Mechanical.

I. Pneumatic (Air) Systems

General

An ideal or balanced braking system is one in which the braking pressure reaches each actuator as close to simultaneously as possible and at the same pressure level (and at an appropriate level to achieve torque balance with respect to the axle's loading). We recommend downloading the BW1555 Air Pressure Balance & Threshold Pressure Tests worksheet from the Literature Center at www.bendix.com.

Transmission Time

Vehicle manufacturers must comply with the air system timing requirements of Government regulations (e.g. U.S. FMVSS 121, Canadian CMVSS 121). In establishing this performance, vehicle manufacturers carefully select tubing and hose sizes. Air application and release performance is partially dependent upon the size and volume of chambers, vehicle weights and locations of the valves and chambers, or distance the air must travel. Performance is engineered into the vehicle by the manufacturer; the role of the vehicle owner and/or mechanic is to preserve that pneumatic performance. Here are a few tips to assist in that effort.

Tubing

When replacing tubing or hoses, always replace with DOT or SAE approved tubing of the same size. These sizes have been determined by the vehicle manufacturer to obtain desired performance. If copper tubing is used, always make sure to ream and de-burr the tubing after cutting. Check carefully for restrictions such as kinking or bending, and make sure tubing and hoses are properly supported. Use the proper size fittings and make certain they are not restricted. As a rule, do not replace straight fittings with elbows. Note: it takes as much time for air to flow through an elbow fitting as through 6-7 feet of tubing or hose.

Valving

When replacing valves in the air brake system, be sure that the function of the replacement valve is comparable with the valve being replaced. Wherever possible, we recommend genuine Bendix parts be used. Then you can ensure that the new valve is equal in performance to the original. Bendix adheres to an industry recommendation which requires that, for some valves, the valve type and some of its critical characteristics are identified by a metal tag or washer to help select the correct replacement. (For example: relay valve crack pressures.)

Air System Contamination

Air brake systems need clean air to function at their best. Almost all vehicles with air brakes now use an air dryer to remove contaminants from the air before it enters the system.

A properly maintained desiccant-type air dryer will remove almost all the water vapor and oil droplets present in the compressed air arriving from the air compressor.

Typically, air dryer cartridge replacement intervals are:

- Every 3 years/300,000 miles for a low air use vehicle (e.g. line haul, single trailer, with 5 or less axles) or,
- Every year/100,000 miles for a high air use vehicle (e.g. refuse truck, transit bus, bulk unloader, or line haul with 6 or more axles.)

A properly maintained air dryer will substantially reduce the potential for freeze-ups in the system.

If for some reason an air dryer is not in use, daily reservoir draining can help reduce the amount of contamination in the system. While reservoir draining can not eliminate valve contamination, it can reduce the amount.

Trailer Air System Contamination

Contamination by insects, fibrous material, etc. can affect trailer air brake systems. The Cyclone DuraDrain™ trailer water separator installed in the trailer control and/or supply lines near the gladhands where it self-purges liquid contaminates, contains solid contaminants and improves the life of the trailer system components. Other Bendix products that work to help trailer air system are: the AF-3™ in-line air filter screens out foreign material from trailer air lines; and the System-Guard® trailer air dryer which removes moisture and contaminates from the trailer air system.

II. Mechanical Systems

General

Vehicle manufacturers must also comply with Government regulations for braking performance (e.g. U.S. FMVSS 121, Canadian CMVSS 121). As with the air or pneumatic side of the system, the vehicle manufacturer must carefully design the brake geometry, size and power of the foundation brake components to achieve the desired vehicle performance. Maintenance personnel must likewise strive to maintain this performance.

Actuators

Brake chambers convert air pressure into mechanical force. Always maintain the chambers to their original performance condition. If chamber return springs need replacement, the springs should be replaced with springs of the proper spring load. When replacing, remember the chamber return spring affects the net force delivered by the chamber, and is especially important in low service brake applications. For this reason always replace the return spring on both chambers on an axle.

Chamber diaphragm life will vary according to the type of service and the diaphragm environment. Experience will generally dictate replacement frequency, and it is good practice to replace all diaphragms on the vehicle at the same time.

Also, in the case of S-Cam brakes, make sure the chamber push rods are in line with the slack adjusters. If misaligned, the chamber rod can rub on the chamber's non-pressure plate and cause a dragging brake.

Another factor that influences the brake chamber output force is the chamber push rod length. Ideally, the push rod length should be adjusted so that when the chamber reaches half its maximum stroke a 90 degree angle (approximately) is formed between the slack adjuster and chamber push rod.

Foundation Brakes

Braking torque is established by the vehicle manufacturer and is determined by the designed axle weight. Brake size (diameter), brake block or pad characteristics and the foundation brake design (S-Cam, air disc, etc.) influence brake torque. In the case of S-Cam brakes, the torque is carefully evaluated in relation to drum capacity, drum area, and lining area and in the case of air disc brakes, rotor/pad specifications. It is recommended that you consult the vehicle manufacturer before attempting any changes that would affect brake torque.

Mechanical friction within the foundation brake can affect brake output torque. The components of the foundation brake are subject to high forces and should be periodically checked and lubricated as necessary.

Friction material (e.g. brake block and lining segments, etc.) affect vehicle stopping performance and are a factor in wear balance from front to rear. Replacement material should be chosen for its stopping performance as well as wear characteristics. At a minimum, always replace friction material on both ends of an axle whenever one side is being serviced. For rear axles, it is recommended that friction material on all axles be replaced at one time.

With air disc brakes, the rotor-friction couple is carefully designed and validated for optimal performance. When replacing air disc brake pads, always select replacement pads that have been validated to perform with the rotor used, in order to prevent premature or uneven pad wear or damage to critical disc brake components (e.g. cracked rotors) which can adversely affect braking performance.

Brake Adjustment

One of the most important factors in obtaining maximum mechanical output of the chamber is proper brake adjustment. All chamber strokes should be adjusted to approximately the same stroke, and the adjustment should be made so that the chamber stroke is as short as possible without the brakes dragging. Improperly adjusted brakes waste air, reduce leverage and contribute to poor brake performance. In many cases, complaints of poor or insufficient braking power can be taken care of by proper brake adjustment.

Brake System Maintenance

Because no two vehicles operate under identical conditions, maintenance and maintenance intervals will vary. Experience is a valuable guide in determining the best maintenance interval for any one particular vehicle.

In Section 9, Air Brake System Troubleshooting, you will find some suggested tests for determining the overall condition of the air brake system and to help quickly locate problem areas. The tests check both leakage and device function. Performing these tests on a quarterly basis and recording the results of the tests in the vehicle maintenance records would provide a valuable basis for performance comparisons/trends and assist in deciding maintenance intervals.

Section 9: Air Brake System Troubleshooting Tests

Please follow all standard safety precautions, including, but not limited to, the general precautions listed on page 4 of this handbook.

TEST ONE

Governor cut-out / Low pressure warning / Pressure build-up

Vehicle parked, wheels chocked

		OK	Not OK
1.	Drain all the reservoirs to 0 psi.	☐	☐
2.	Start the engine and run at fast idle. The low pressure warning should be on. Note: on vehicles equipped with ABS, the warning lamp will also come on momentarily when the ignition is turned on. On some systems, such as the AD-IS® dryer system (illustrated), reservoirs may not fill simultaneously and one reservoir may fill to 110 psi before the other starts to fill.	☐	☐
3.	Low pressure warning; dash warning lamp should go off above 60 psi.	☐	☐
4.	Build up time; pressure should build from 85-100 psi within 40 seconds.	☐	☐
5.	Governor cut-out; cuts out at the correct pressure, usually 125-135 psi.	☐	☐
6.	Governor cut-in; reduce the service air pressure to governor cut-in. The difference between cut-in and cut-out pressure must not exceed 30 psi.	☐	☐

Make all the necessary repairs before proceeding to test 2; see checklist 1 for common corrections.

CHECKLIST ONE

If the low pressure warning lamp or buzzer doesn't come on:

1. Check the warning lamp wiring.
2. Check the warning lamp bulb.
3. Repair or replace the buzzer, bulb or low pressure warning switch(es).

If the governor cut-out is higher or lower than specified by the vehicle manual:

1. Repair, replace or adjust the governor as necessary after ensuring the compressor unloader mechanism is operating correctly.

If the low pressure warning occurs below 60 psi:

1. Check the dash gauge with test gauge known to be accurate.
2. Repair or replace the faulty low pressure indicator switch.

If the compressor build up time exceeds 40 seconds or is considerably greater than the permanent record figure:

1. Examine the compressor air inlet filter and inlet line checking for restrictions, damage or wear. Clean or replace the filter or inlet line as necessary.
2. Check the compressor discharge port and line for excessive carbon. Clean or replace the discharge line as necessary. If there is carbon, find the cause of the excessive heat.
3. With the system fully charged and governor in the unloaded mode, listen at the compressor inlet for leakage. If leakage can be heard, remove the unloaders and repair or replace as necessary.

Retest to verify proper operation of all items repaired or replaced.

TEST 2

Leakage (reservoir air supply)

For additional information refer to video Assessing Air Brake System Air Leakage (BW2327 - CD)

	Full pressure, engine stopped, parking brakes applied	OK	Not OK
1.	Allow the air pressure to stabilize for at least 1 minute.	☐	☐
2.	Observe the dash gauge pressures for 2 minutes and note any pressure drop.		
	A. Pressure Drop: Single Vehicle (A 4 psi drop within 2 minutes is allowable for either service reservoir)	☐	☐
	B. Pressure Drop: Tractor/Trailer (A 6 psi drop within 2 minutes is allowable for either service reservoir)	☐	☐
	C. Pressure Drop: Tractor/2 Trailers (An 8 psi drop within 2 minutes is allowable for either service reservoir)	☐	☐

Make all the necessary repairs before proceeding to test 3; see checklist 2 for common corrections.

CHECKLIST 2

If there is excessive leakage in the supply side of the pneumatic system, one or more of the following devices could be causing the problem:

NOTE: A leak detector or soap solution will aid in locating the faulty component.

1. Supply lines and fittings
2. Low pressure indicator(s)
3. Service brake relay valve(s)
4. Spring brake relay valve (where applicable)
5. Dual brake valve
6. Trailer hand control valve
7. Parking control valve
8. System safety valve(s) in the supply reservoir and/or air dryer
9. Governor (may be mounted on the air dryer as illustrated, on the compressor, or remotely).
10. Compressor discharge line

Retest to verify proper operation of all items repaired or replaced.

TEST 3

Pressure Modulator Valve and Traction Control Valve Chuff Test

Full pressure, engine stopped, parking brakes released

Make and hold brake application. When ignition power is applied, each modulator solenoid is briefly energized. If the air system is fully charged and the service brake pedal is depressed during ignition, the modulator creates a single, sharp audible "chuff" of air pressure. The modulators are energized in a certain pattern, as follows: right front, left front, right rear, left rear. This test is performed only when the vehicle is stationary (if the vehicle moves the chuff test will not be performed).

NOTE: The EC-60™ controller will perform a PMV chuff test on all installed modulators in the following order:

1. Steer Axle Right PMV
2. Steer Axle Left PMV
3. Drive Axle Right PMV
4. Drive Axle Left PMV
5. Additional Axle Right PMV
6. Additional Axle Left PMV
7. Drive Axle TCV

The pattern will then repeat itself.

See appropriate Service Data Sheet for repairs.

Make all necessary repairs before proceeding to Test 4.

TEST 4

Leakage service air delivery

Full pressure, engine stopped, parking brakes released

1. Make and hold brake application. This can be accomplished by using the BVA-85™ brake valve actuator. If the vehicle is not equipped with a BVA-85™ brake valve actuator, a block of wood can be used to hold the foot valve down during these tests.
2. Allow pressure to stabilize for 1 minute; then begin timing for 2 minutes while watching the dash gauges for a pressure drop.
   A. Pressure Drop: Single Vehicle (A 4 psi drop within 2 minutes is allowable for either service reservoir)
   B. Pressure Drop: Tractor/Trailer (A 6 psi drop within 2 minutes is allowable for either service reservoir)
   C. Pressure Drop: Tractor/2 Trailers (An 8 psi drop within 2 minutes is allowable for either service reservoir)
3. Check brake chamber push rod travel (refer to chart for allowable tolerances). With the parking brakes released and service brakes applied with 80 to 90 psi of air pressure in the service chambers.

Brake Chamber Size	Maximum Allowable Stroke	Maximum Allowable Stroke - Long Stroke
12	1-3/8"	1-3/4"
16	1-3/4"	2"
20	1-3/4"	2"
24	1-3/4"	2"
24 (max. stroke)	-	2½"
30	2"	2½"

4. Check the angle formed between the brake chamber push rod and slack adjuster arm. It should be approximately 90° in the applied position (80-90 psi) and the same across the axle.

Make all necessary repairs before proceeding to test 5; see checklist 4 for common corrections.

CHECKLIST 4

If there is excessive leakage in the service side of the pneumatic system, one or more of the following devices could be causing the problem.

NOTE: A leak detector or soap solution will aid in locating the faulty component.

1. Loose service lines and fittings
2. Trailer control valve
3. Stoplight switch
4. Brake chamber diaphragms
5. Tractor protection valve
6. Service brake relay valves
7. Dual brake valve
8. Inverting relay spring brake control valve (where applicable – usually found on spring brake relay valve) straight trucks and buses
9. Double check valve.

If the automatic slack adjuster is not adjusting, repair or replace to obtain desired setting.

CAUTION: If the brake chamber push rod travel exceeds the allowable stroke, then identify and fix the problem. DO NOT adjust and return to service!

Retest to verify proper operation of all items repaired or replaced.

TEST 5

Manual Parking Brake Operation

Full pressure, engine idling 600-900 rpm

FOR STRAIGHT TRUCKS, BUSES AND BOBTAIL TRACTOR:

1. Manually operate the park control, yellow button valve, and note that parking brakes apply and release promptly as the control valve button is pulled out and pushed in.

FOR TRACTOR/TRAILER COMBINATIONS:

1. Manually operate the tractor protection control valve (trailer supply valve usually red octagonal button). Note that trailer brakes apply and release promptly as the control button is pulled out and pushed in.
2. Manually operate system park control (usually yellow diamond button) and note all parking brakes (tractor and trailer) apply promptly.

Make all necessary repairs before proceeding to test 6; see Checklist 5 for common corrections.

CHECKLIST 5

If sluggish performance is noted in either test, check for:

1. Dented or kinked lines
2. Improperly installed hose fitting
3. A faulty quick release valve or spring brake control valve
4. Binding cam shafts or ungreased cam shaft bushings

If the trailer brakes do not actuate and the trailer supply line remains charged, check the:

1. Tractor protection control
2. Trailer spring brake valve
3. Binding cam shafts or ungreased cam shaft bushings

Retest to verify proper operation of all items repaired or replaced.

TEST 6

Dual circuit system integrity check (emergency braking) and/or Automatic application of the parking brake and /or Tractor protection valve operation

Full pressure, engine stopped, parking brakes released

1. Drain the front axle or secondary reservoir to 0 psi.
   A. The rear axle or primary reservoir should retain most of its pressure.
   B. On combination vehicles, the trailer air system should remain charged.
   C. Tractor and trailer brakes should not apply automatically.
2. With no air pressure in the front axle reservoir make a brake application.
   A. Rear axle brakes should apply and release when application is released.
   B. On combination vehicles the trailer brakes should also apply and release when application is released.
   C. The stop lamps should light and go off when the application is released.
3. Optional "Pop" Pressure Vehicle Test Procedure

[Note: Bendix is not aware of any federal legislation that specifies the pressure at which the YELLOW parking brake control valve must automatically "trip" to apply the vehicle parking brakes. This includes the Federal Motor Carrier Safety Regulations (FMCSR) for in-use vehicles, the CVSA out-of-service criteria, and the Federal Motor Vehicle Safety Standards (FMVSS) for newly manufactured vehicles. Although the "trip" pressure for the parking brake control valve is not stipulated for in-use or newly manufactured vehicles, a parking brake control valve "trip" pressure of 20-40 psi is currently (02/2009) specified as part of the Commercial Driver License in the CDL Manual. The CDL Manual is not consistent with the regulations cited above. See Bulletin TCH-03-051.]

   A. Install an accurate "shop standard" pressure gauge in the secondary service reservoir.
   B. Build pressure in the service reservoirs until the compressor cut-out is reached, shut the engine off.
   C. Open the manual drain valve on the primary service reservoir allowing the reservoir to drain completely.
   D. Open the secondary reservoir's manual drain valve creating a bleed rate of approximately 20-50 psi/min.
   E. Verify that the parking control automatically "pops".
4. For Towing Vehicles Only - Test the tractor protection valve feature
   A. Charge the air system to governor cut-out.
   B. Disconnect the service or control (blue) line to the trailer.
   C. Take care to restrain the service coupling and direct flow safely away while making and holding a full service brake application via the foot valve.
   D. As the service application is vented through the open gladhand the service system pressure drops until the tractor protection control (red) valve trips shutting off the leak through the open coupling.
   E. Record the pressure in the service reservoirs. Disconnect the trailer supply coupling to verify that the supply or emergency (red) coupling has been vented to atmosphere, thereby activating the trailer emergency feature.
5. Close the drain cocks, recharge system and drain rear axle, primary reservoir to 0 psi.
   A. The front axle reservoir should retain most of its pressure.
   B. On combination vehicles the trailer air system should remain charged.
6. With no air pressure in the rear axle reservoir, make and release a brake application.
   A. Front axle brakes should apply and release.
   B. On combination vehicles the trailer brakes should also apply and release.
   C. If the vehicle is equipped with a spring brake modulating valve, typically found on trucks, towing trucks and buses, the rear axle brakes should also apply and release by exhausting spring brake air.

Make all necessary repairs before proceeding; See checklist 6 for common corrections.

CHECKLIST 6

If the vehicle fails to pass the tests outlined, then check the following components for leakage and proper operation:

1. Fittings
2. Kinked hose or tubing
3. Pressure protection valves
4. Double check valves
5. Tractor protection valve
6. Tractor protection control valve
7. Parking control valve
8. Relay valves (antilock modulators)
9. Trailer spring brake control valve
10. Inverting relay spring brake control valve (optional) straight trucks and buses

Retest to verify proper operation of all items repaired or replaced.

Bendix Literature, DVDs and CDs available

Download many of these items now from www.bendix.com, or order paper copies etc. online from the Literature Center at bendix.com

The list shows a selection of many items available:

CD/DVD Offerings

Air Brake System CD with Workbooks BW1673-CD
Air Brake System DVD with Workbooks. BW1673-DVD
Air Brake System Workbook. BW1678
Bendix Air Brake System Training - DVD BW1957-DVD
Bendix Air Brake System Training - CD BW1957-CD
Air Leakage CD BW2327
Air Brake System Interactive Training CD BW2441
ABS/ATC/ESP Repair/Diagnostics CD. BW2538

Diagnostic Software

ACom™ Diagnostics for Windows CD. BW2329

Electronic Catalogs

Electronic Service Data Sheets CD BW2031
Friction Materials Catalog CD. AH-9705
I Parts Catalog CD AH-9754

Brochures, Ads & Flyers

Genuine Bendix Valves Brochure. BW2047
EverFlow® Air Dryer Module Sell Sheet BW2076
AD-9® System-Guard® Sell Sheet. BW2088
Dryer Reservoir Module Sell Sheet BW2096
Bendix Trailer Products Sell Sheet. BW2151
AD-IS® Air Dryer Sell Sheet BW2213
ES Wide Brake Sales Flyer BW7300
ES Brake Flyer BW7271
ESR Reduced Envelope Brake Flyer BW7319
XtraLife II S-Cam Brake Flyer. BW7284
ASA-5® Automatic Slack Adjuster Sell Sheet BW7295
SureStroke™ Indicator Sell Sheet BW7296
LMS™ Brake Package Sell Sheet BW7318

Catalogs, Service Manuals and Bulletins

Part Number Reference Book BW1010
Quick Reference Catalog English. BW1114
Quick Reference Catalog Spanish BW1115
Quick Reference Catalog French BW1116
Air Brake Handbook BW5057

BW1114 Quick Reference Catalog

BW2441 Interactive Training CD

BW2329 ACom™ Diagnostics for Windows

Air Parts Binder BW9100
Service Manual Binder BW9600
Brake Tool and Envelope BW7261
ESD-225 Illustrated Parts Guide BW7264
Air Disc Brake Illustrated Parts Guide Spanish BW7265
1999-90 Brake Application Catalog 8-1975C

Troubleshooting

Air Pressure Balance Pressure Tests Brochure BW1555
Compressor Oil Passing Troubleshooting BW1971

Wallcharts & Pads

Air Brake Expert Wallchart BW902
Air Brake System Wallchart (English/Spanish). BW1231ES
Air Brake System Wallchart (English/French) BW1231EF
Air Core Class Wallchart BW1299
Air Reman Exchange Core Class Mini Chart BW1330
Air Brake System Troubleshooting BW1396
Promo Bus Chart Pad. BW1397
Hydraulic Parts Core Chart. BW1659
Air Brake Component Wallchart BW1974
Vacuum Hydraulic Brake System Wallchart BW1398
Troubleshooting Vacuum Hydraulic Brake System Pad BW1399
Power Hydraulic Brake System Wallchart BW1611
School Bus Air Brake System Chart. BW1640

Additional

1-800 Card BW2272
ASA-5® Automatic Slack Adjuster Template BW1641
Mini Fold Out Brake Shoe and Lining. BW7244
Air Disc Brake Illustrated Parts Guide Spanish BW7265
Brake Shoe and Lining Poster BW7243

Bendix reserves the right to limit quantities and cannot guarantee availability.

Contact Bendix

For questions about troubleshooting, part number cross-reference, etc. call the Tech Team at 1-800-AIR-BRAKE or email TechTeam@bendix.com. See the Contacts area of www.bendix.com for contact information for Bendix dealers and distributors, Service Engineers, and Account Managers.

For ABS questions, please email ABS@Bendix.com.

For all other inquiries, please email info@bendix.com.

About Bendix Commercial Vehicle Systems LLC

We supply air brake charging and control systems and components, vehicle modules, and leading-edge safety technologies under the Bendix® brand name for medium- and heavy-duty trucks, tractors, trailers, buses and other commercial vehicles in North America, Europe and Australia. Employing more than 2,200 people, Bendix is headquartered in Elyria, Ohio, with manufacturing plants in the U.S., Canada and Mexico.

We are part of a global organization with technical and manufacturing centers worldwide, and remain on the leading edge of new product development and applications engineering.

Bendix products are backed by our TechTeam - a team of air brake experts who staff our 1-800-AIR-BRAKE (1-800-247-2725) hotline.

We also invite you to visit www.bendix.com for all the latest information on our products.

Our Service Engineers provide on- and off-site technical training, see the website for a list of current Training School dates and locations.

A Brief History of Bendix Commercial Vehicle Systems LLC

1869: Westinghouse Air Brake Company established in Wilmerding, Pa., to manufacture air brakes invented by George Westinghouse.

1924: Westinghouse air brake system (including Broussouse compressor) applied to International Harvester Coach in Akron, Oh.

1927: Bendix Corporation formed by automotive engineer Vincent Bendix. Company produces "Safety Servo" vacuum brake under the Braggs-Kliesrath name.

1930: Bendix-Westinghouse Automotive Air Brake Company established following the merger of Bendix Corp. and Westinghouse Automotive Air Brake. Headquarters located in Wilmerding, Pa.

1934: Bendix-Westinghouse takes automotive air brake worldwide by establishing licensing agreements with Westinghouse companies in France, Germany, Italy and England.

1941: Bendix-Westinghouse establishes new headquarters in Elyria, Oh.

1949: WWII accelerates developments, and air braking becomes standard on all heavy trucks, tractor-trailers, buses, fire trucks and off-highway vehicles.

1960: Automatic slack adjusters, air dryers, dual brake valves and first generation antilock braking systems are under development.

1969: Bendix Corporation acquires 100 percent ownership of Bendix-Westinghouse.

1973: Bendix-Westinghouse becomes Bendix Heavy Vehicle Systems Group, a division of Bendix Corporation.

1975: Bendix dual air brake system becomes standard for the National Highway Traffic Safety Administration's Federal Motor Vehicle Safety Standard (FMVSS) 121.

1980: Bendix establishes worldwide parts distribution center and remanufacturing operation in Huntington, In.

1982: Bendix Corporation merges with Allied Corporation and the division becomes an operating unit of Allied Automotive, an independent supplier to the worldwide automotive industry under the brand names of Bendix®, Fram® and Autolite®.

1986: The Bendix Heavy Vehicle Systems Group of Allied merges with Bendix Limited European truck air brake operation establishing Bendix Heavy Vehicle Systems Group-Europe. Allied Corporation acquires Signal operations establishing AlliedSignal Inc. as the division's parent company.

1989: Bendix Heavy Vehicle Systems Group-Europe acquires truck air brake operation of Magneti Marelli, strengthening European operations.

1999: AlliedSignal merges with Honeywell International. The new company continues to offer Bendix® brand name air brake and control systems and components under its Honeywell Commercial Vehicle Systems unit. Honeywell operates Honeywell Commercial Vehicle Systems as a joint venture with Knorr-Bremse AG of Munich, Germany. Honeywell owns 65 percent of the unit. Knorr-Bremse owns 35 percent.

2002: Knorr-Bremse assumes 100 percent ownership of Honeywell Commercial Vehicle Systems from Honeywell International Inc. The company changes its legal name to Bendix Commercial Vehicle Systems LLC.

2004: Bendix CVS & Dana Commercial Vehicle Products, LLC form wheel end joint venture, Bendix Spicer Foundation Brake.

2004: Bendix CVS introduces first ABS-based full stability system for commercial vehicles, Bendix® ESP.

2005: Bendix begins North American production of air disc brakes

2005: BSFB forms a strategic alliance with Gorilla Brake

2006: Bendix Spicer Foundation Brake acquires Di-Pro, Inc.

2007: BSFB opens manufacturing plant in Bowling Green, Kentucky.

2008: Bendix begins production of air disc brakes at the Bowling Green facility.

2008: Bendix CVS launches integrated vehicle module program for full cab assembly at Huntington, Indiana modules center.

AGENDA

Typical Tractor System Schematic with ESP® Stability

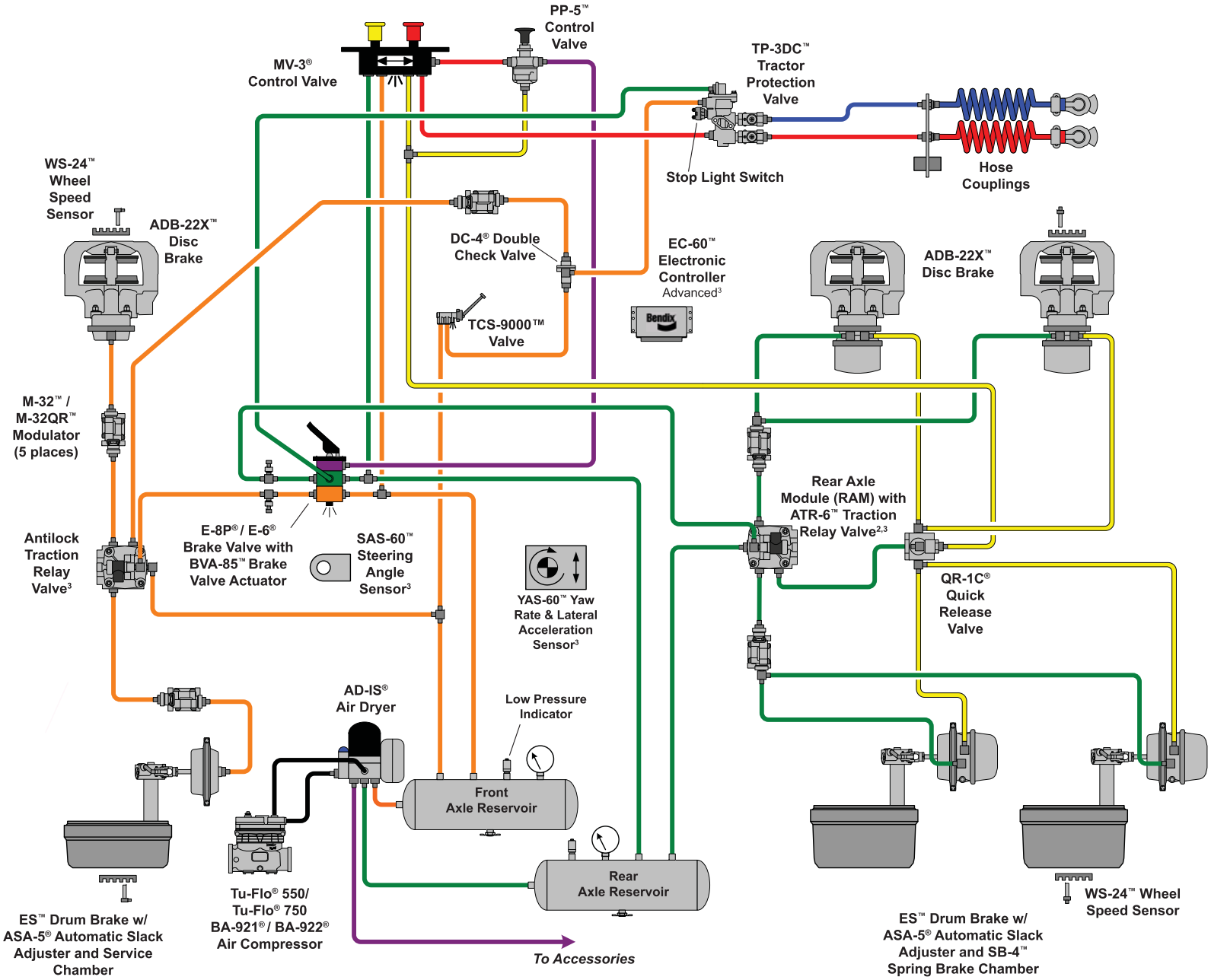

©2009 Bendix Commercial Vehicle Systems LLC • All Rights Reserved

AGENDA

Typical Truck System Schematic with ESP® Stability

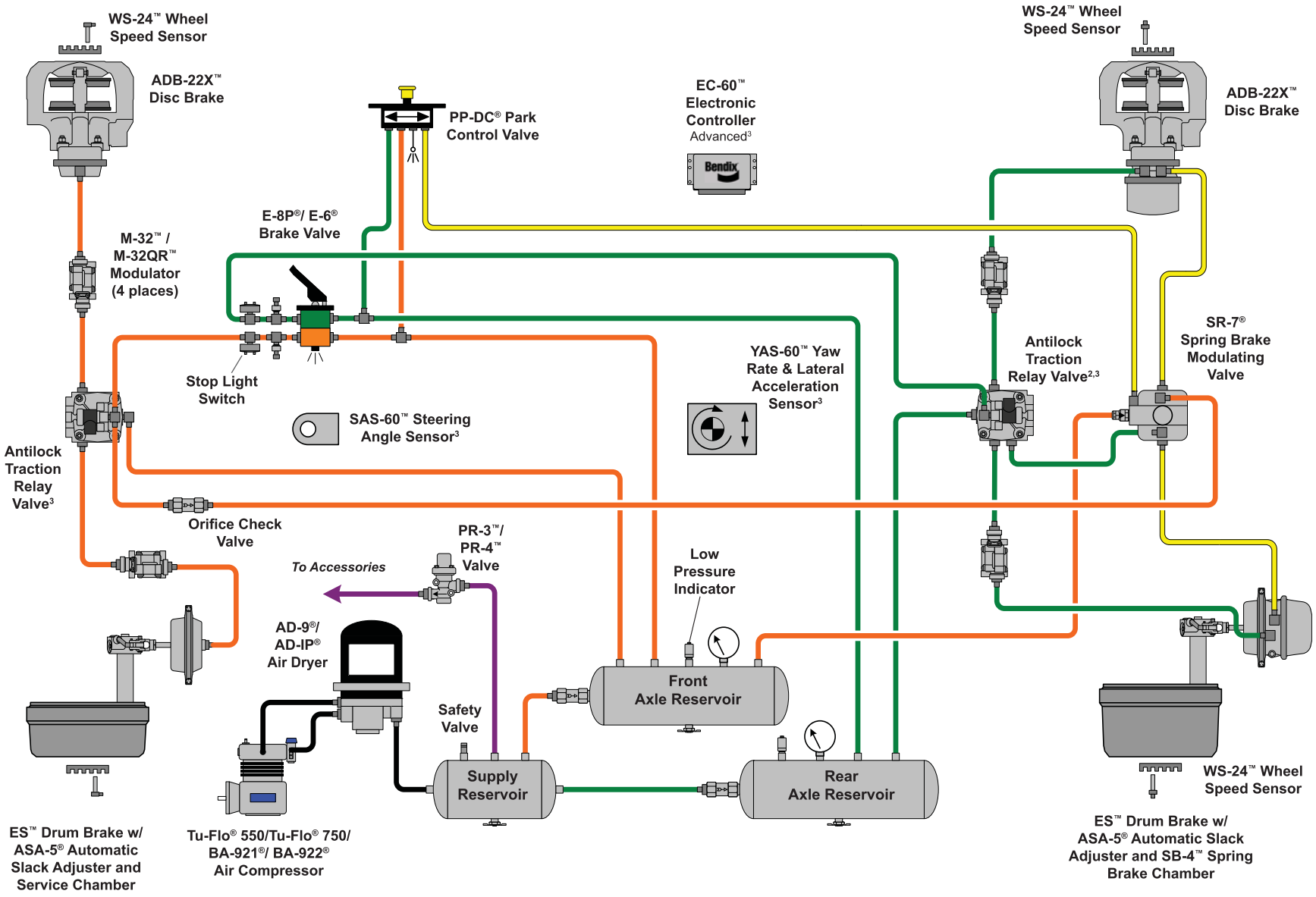

©2009 Bendix Commercial Vehicle Systems LLC • All Rights Reserved

AGENDA

Typical Truck System Schematic

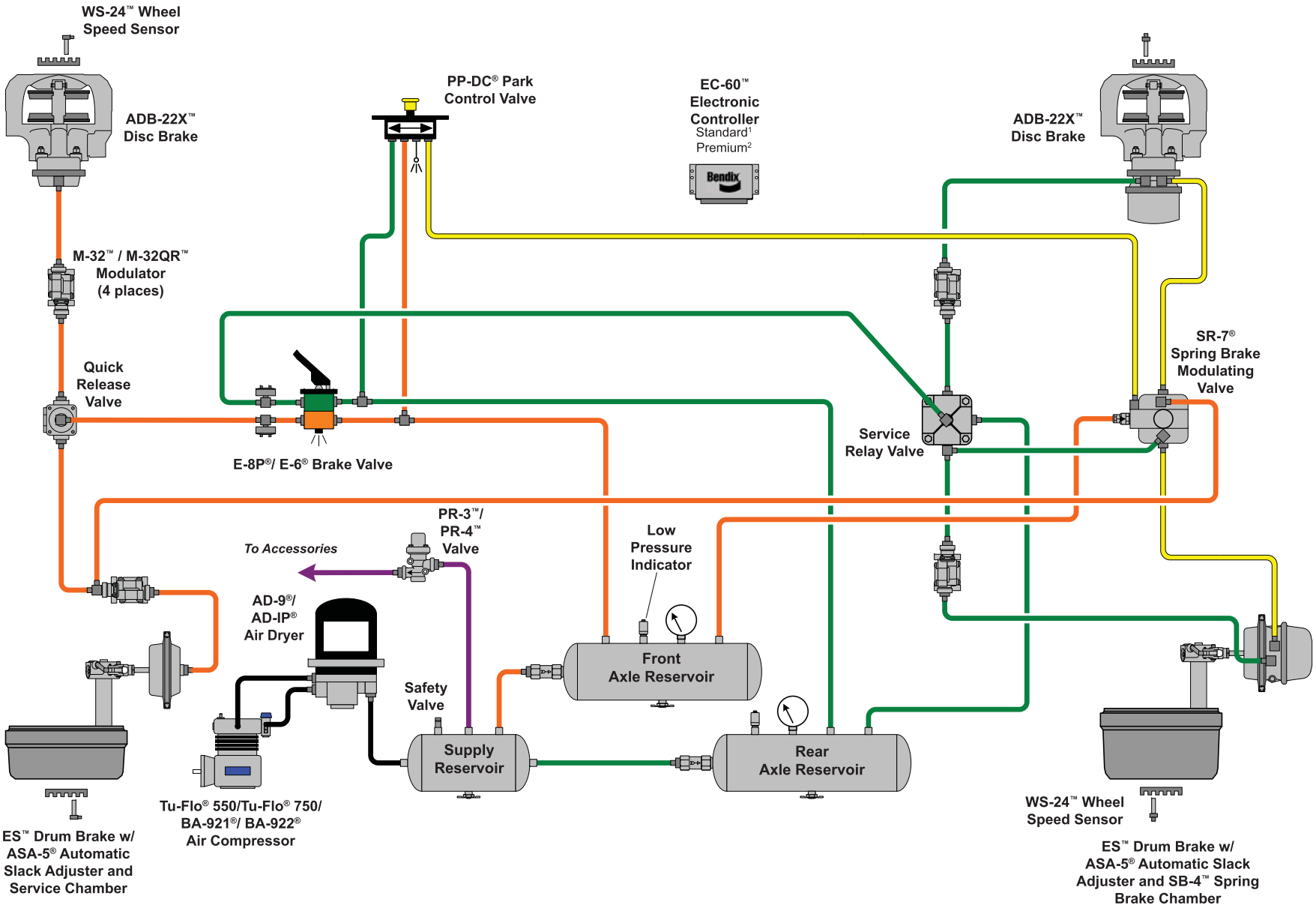

©2009 Bendix Commercial Vehicle Systems LLC • All Rights Reserved

Bendix

Bendix Spicer
Foundation Brake LLC
A Bendix CVS and Dana Joint Venture

Service Plants

Huntington
1850 Riverfork Drive West
Huntington, IN 46750
260.356.9720

Bowling Green
346 Central Avenue
Bowling Green, KY 42101
270.783.5000

Acuña
21 Finegan Drive
Del Rio, TX 78840
(01152877) 773-05-04

Vancouver
Suite 150
13151 Vanier Place
Richmond, British Columbia
Canada V6V 2J1
604-276-9884

Distribution Centers

Huntington
1850 Riverfork Drive West
Huntington, IN 46750
260.356.9720

Mexico City
Rio Lerma #108 ext. 2
Fracc. Ind. Tlaxcolpan
Tlalnepantla
Edo. de Mex.
54030
011 52 (55) 16 65 90 40

Montreal
8851 4e Croissant
Anjou, Quebec
H1J 1A9
514.323.0303

Sparks
1095 Spice Island Drive
Suite 101
Sparks, NV 89431
775.353.4255

---

901 Cleveland Street • Elyria, OH 44035 • 1-800-AIR-BRAKE • www.bendix.com

BW5057 • ©2009 Bendix Commercial Vehicle Systems LLC, a member of the Knorr-Bremse Group • All rights reserved • 2/09 Printed in U.S.A.

AGENDA

S-ABA Operator's Guide

Haldex

L30037 9/03

SELF-SETTING AUTOMATIC BRAKE ADJUSTERS

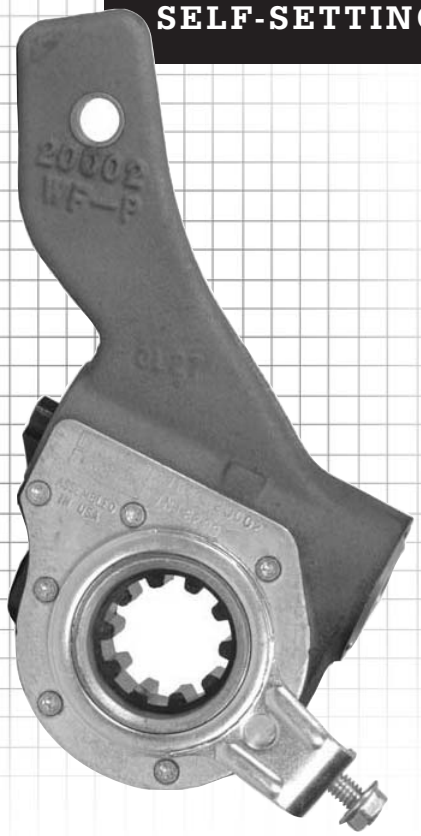

www.hbsna.com

Warning: Haldex strongly recommends routine visual checks be performed at EACH maintenance service interval. Foundation brake operational checks utilizing CVSA Level 1 Applied Stroke Criteria should always be utilized. Manual adjustment of automatic adjusters can disguise hidden problems within the foundation brake. Brake components such as s-cams, bushings, return springs, actuators, drums and adjuster installation MUST be within manufacturer's specifications. Adjuster control arms, wear bushings or attaching hardware that demonstrate visual damage, or which fail the operational checks, MUST be replaced immediately. Automatic adjusters should NEVER be operated as manual adjusters except as may be necessary to get the vehicle off the road for service.

Table of Contents

S-ABA Operation 1

S-ABA Brake Adjuster Identification . . 1

Steer Axle Applications 2

Drive Axle Applications 2

Trailer Axle Applications 3

S-ABA Installation Procedures 4

Routine Visual/Operational Checks. . . 6

Service and Lubrication Intervals 6

Foundation Brake Operational
Check and Troubleshooting. 7

Brake Adjuster Checking Procedures . 9

Brake Adjuster Operational Check . . . 9

Typical Parts Identification
and Location 10

Torque Specifications. 11

Frequently Asked Questions 12

Additional Parts and
Service Information 13

Important Notice
This symbol is used throughout the manual to call attention to procedures where carelessness or failure to follow specific instructions may result in personal injury and/or component damage.

The description and specifications contained in this service publication are current at the time of printing. Haldex Brake Products Corp. reserves the right to discontinue or modify its models and/or procedures and to change specifications at any time without notice.

S-ABA Operation

The Haldex S-ABA automatic brake adjuster is a clearance sensing brake adjuster that maintains a nominal distance or clearance between lining and drum.

When the Adjuster is Installed:

With the brake in the released position, the control arm is fixed to the anchor bracket. The adjustment hex is rotated until the shoes contact the brake drum and then backed off 1/2 turn. When the brake is applied on the first application, the endless rack rotates to the correct position and sets itself.

When the Brake Applies:

When the brake is applied, the adjustment regulator rotates through the normal clearance angle and the shoes contact the drum. The torque increases and the wormshaft is moved axially, causing the coil spring to be compressed and the clutch wheel to disengage. The adjustment components are free to rotate as the brake continues to apply.

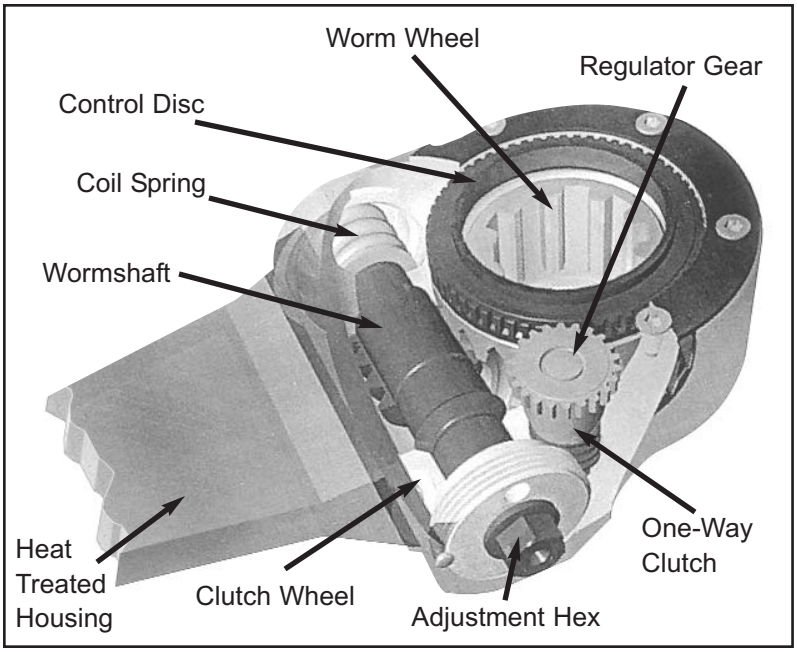

When the Brake Releases:

When the brake is released, the torque decreases returning the wormshaft to the clutch wheel and re-engaging the teeth. The adjustment regulator rotates through the normal clearance angle and the brake is released. If lining wear has taken place the adjustment regulator advances the clutch wheel reducing the excess clearance during the release stroke.

S-ABA Identification

Part Number:
409-20_ _ _ = S-ABA Brake Adjuster

Serial Number:
First 3 digits = Day of year built
Last 2 digits = Year of build

The Part No. P/N40920002 would be our adjuster part number 409-20002.

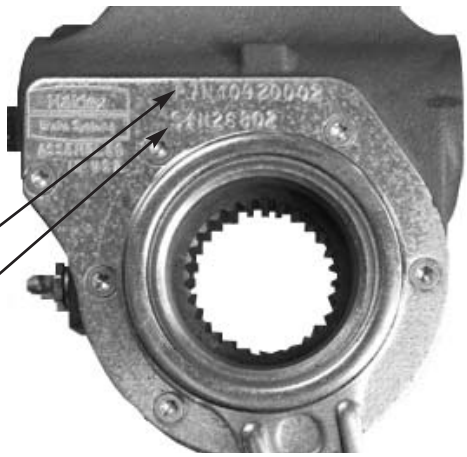

Typical Applications

Steer Axle
Figures 1 and 2 show typical brackets for automatic brake adjuster applications on steer axle brake assemblies. Refer to pages 4 and 5 for detailed installation procedures.

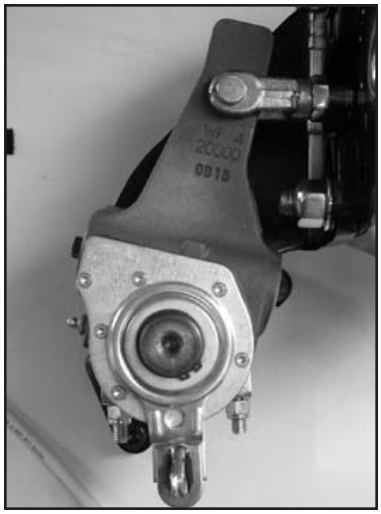

Figure 1
Steer axle with clamp bracket and flat anchor stud

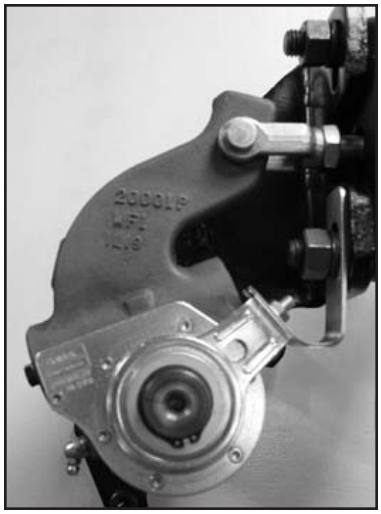

Figure 2
Steer axle with strap bracket

Drive Axle
Figures 3 and 4 show typical brackets for automatic brake adjuster applications on drive axle brake assemblies. Refer to pages 4 and 5 for detailed installation procedures.

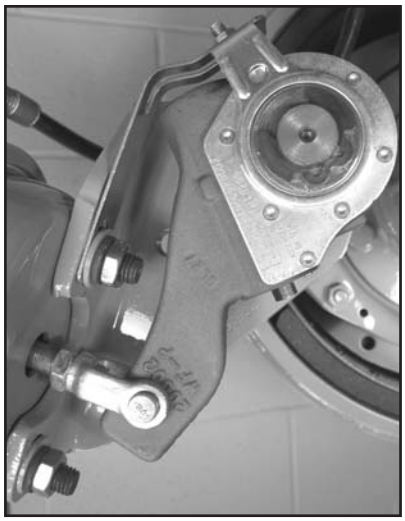

Figure 3
34° drive axle with strap bracket

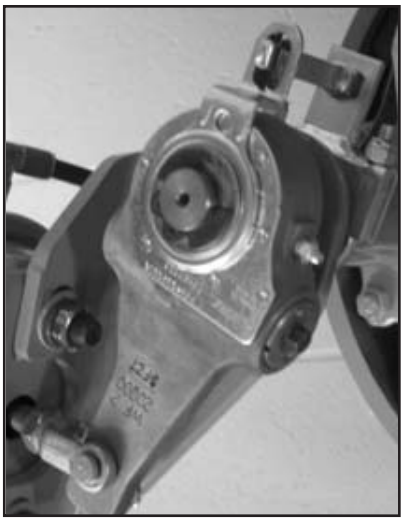

Figure 4
Mack drive axle with clamp bracket and flat anchor stud

Note: Refer to fundamental parts identification and location on page 10.

Typical Applications

Trailer Axle

Figures 5-8 show typical brackets for automatic brake adjuster applications on trailer axle brake assemblies. Refer to pages 4 and 5 for detailed installation procedures.

Figure 5
For 16-1/2" Brake Assemblies

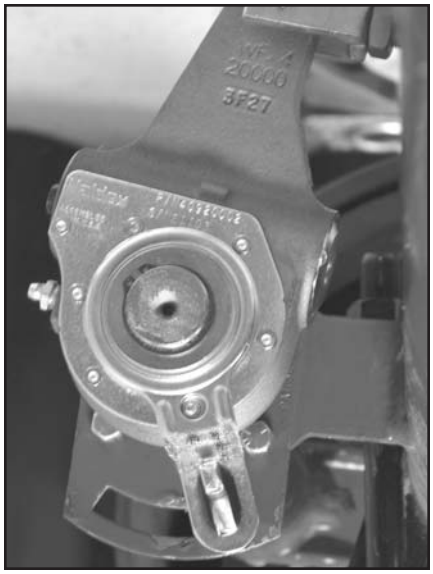

Figure 6
For 12-1/4" Brake Assemblies

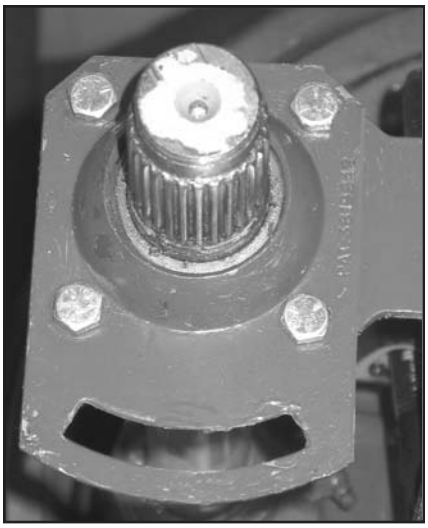

Figure 7
Integral cam support anchor bracket for 12-1/4" and 16-1/2" brakes

Figure 8
Bolt-on cam support anchor bracket for 12-1/4" and 16-1/2" brakes

Note: Refer to fundamental parts identification and location on page 10.

S-ABA Installation Procedures

Note: Configuration of anchor bracket and brake adjuster housing may vary, depending upon axle. Refer to typical applications on Pages 2 and 3.

Step 1

Note: Block wheels to prevent vehicle from rolling. Ensure system tank pressure is above 100 PSI.

- Check that the push rod is fully retracted; apply air to release spring brake. If air is not available, spring brake must be manually caged back.
- Install anchor bracket loosely as illustrated (fig. 9).
- Some strap brackets have two mounting holes. Proper mounting location is determined by the length of adjuster arm. 5" and 5-1/2" adjuster arm lengths utilize the shorter hole location while 6" and 6-1/2" length adjusters utilize the longer hole locations.
- Do not tighten anchor bracket fasteners at this time.
- Apply “Anti-Seize” type lubricant to camshaft splines.

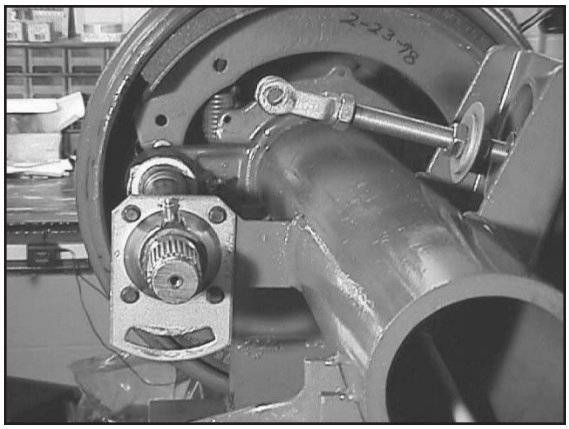

Figure 9

Step 2

- Install the brake adjuster onto the camshaft <u>with the adjusting hex pointing away from the brake chamber</u> (fig. 10).
- Secure the brake adjuster on the camshaft. Use at least one inner washer and enough outer washers to allow no more than .060 movement of adjuster on camshaft. (Per TMC recommended practice RP609-A.)

Note: Do NOT pull push rod out to meet the brake adjuster.

- Rotate the 7/16" adjusting hex nut CLOCKWISE until the clevis hole lines up with the brake adjuster arm hole.
- Apply anti-seize to clevis pin, install and secure with cotter pin.

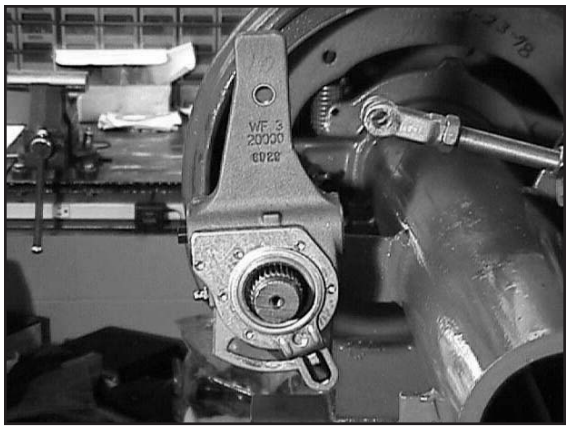

Figure 10

S-ABA Installation Procedures

Step 3

- The S-ABA control arm can be placed anywhere within the range of the bracket slot for automatic adjustment to take place. Haldex recommends, however, rotating all control arms towards the axle until they come to a complete stop (fig. 11a,b,c) and securing in that position. This will create a “common” position for all wheels.

  Tighten all anchor bracket fasteners.

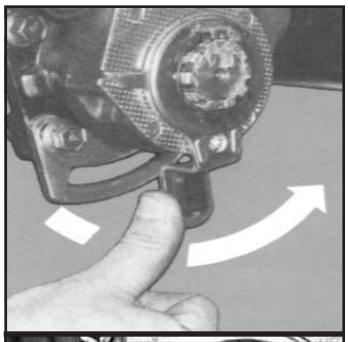

Figure 11a

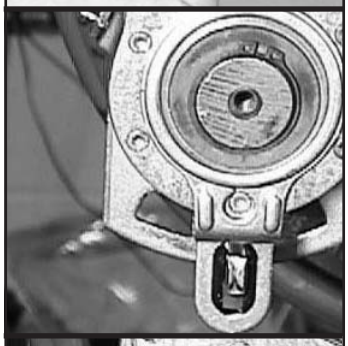

Figure 11b

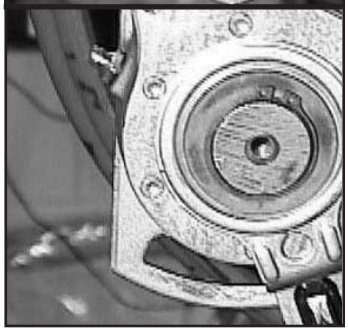

Figure 11c

Step 4

- The adjuster must be manually adjusted at this time.
- Rotate the adjusting hex clockwise until the lining lightly contacts the drum.
- Then, back-off the adjuster by turning the adjusting hex counter-clockwise 1/2 of a turn (fig. 12).
- A minimum of 13 ft. lbs. is necessary to overcome the internal clutch. A ratcheting sound will be present.
- **Do NOT use an impact wrench or permanent internal damage will occur!**

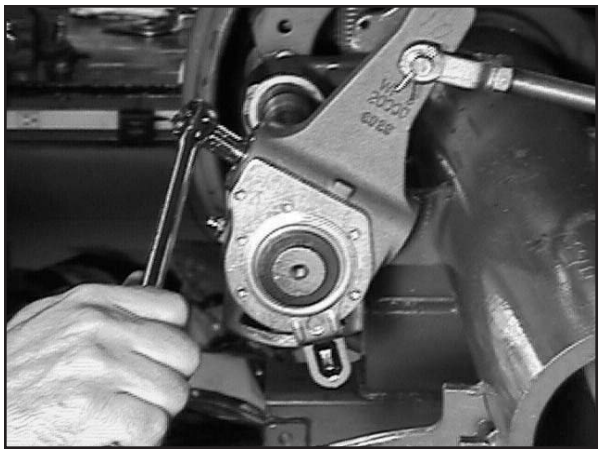

Figure 12

Note: To ensure proper fit and function, always replace both adjuster and mounting bracket, as a set.

Routine Visual/Operational Checks

- **Haldex strongly recommends that routine visual/operational checks, including brackets and control arms, be performed at each Preventative Maintenance Service Interval.**

- **Adjusters or anchor brackets that have visual damage, or which fail the operational checks, MUST be replaced immediately.**

- **Automatic adjusters should not be operated as manual adjusters except as may be necessary to get the vehicle off the road for service.**

Service and Lubrication Intervals for Standard Haldex AA1 and S-ABA Brake Adjusters

Adjuster Type	Manufacture Date	Lubrication Interval	Type of Lubricant	Visual Check Interval
Standard Adjuster 409-10...	Prior to 6/1/96	50,000 miles or every 3 months	Standard Chassis Grease	Each Preventative Maintenance Service Interval
Reduced Maintenance Adjuster 409-10...	After 6/1/96	Once a year	Standard Chassis Grease	Each Preventative Maintenance Service Interval
No-Lube™ Adjuster 429-10...	After 6/1/96	None	Sealed Unit	Each Preventative Maintenance Service Interval
S-ABA Adjuster 409-20...	n/a	Once a year	Standard Chassis Grease	Each Preventative Maintenance Service Interval

Notes:

No-Lube™ automatic brake adjusters are manufactured without a grease fitting and are identified by a 429 prefix.

Moly-disulfide grease should not be used because it may affect the function of the internal friction clutches and reduce the reliability of the automatic adjustment.

In no case should the lubrication interval exceed the published intervals shown above.

Foundation Brake Operational Check and Troubleshooting

Note:
- Block wheels to prevent vehicle from rolling.
- Ensure system reservoir pressure is at 90-100 psi.
- Check that push rod is fully retracted; apply air to release spring brake.

North American Commercial Vehicle Safety Alliance (CVSA)
Uniform Vehicle Inspection Criteria

The applied stroke of the brake should be checked per CVSA guidelines at 90-100 PSI reservoir pressure. **Applied stroke** should be at or less than the specified re-adjustment limits as follows:

Standard Clamp Type Brake Chamber			
Type	Adjustment Limit	Type	Adjustment Limit
9	1-3/8"	24	1-3/4"
12	1-3/8"	30	2"
16	1-3/4"	36	2-1/4"
20	1-3/4"		

Long Stroke Type Brake Chamber			
Type	Adjustment Limit	Type	Adjustment Limit
16L	2"	24LS	2-1/2"
20L	2"	30LS	2-1/2"
24L	2"		

NOTE: Long stroke chambers are identified with square air ports or port bosses and special trapezoid ID tags.

Free Stroke

Measuring the Free Stroke

Free stroke is the amount of movement of the adjuster arm required to move the brake shoes against the drum. With brakes released, measure from the face of the chamber to the center of the clevis pin “A” (fig. 13). Use a lever to move the brake adjuster until the brake shoes contact the drum “B” (fig. 13). The difference between the fully retracted and drum contact measurement “B”–“A” (fig. 13), is the free stroke. The free stroke range should fall between 3/8"–3/4".

Free Stroke Within Range

If the free stroke is good, but the applied stroke is too long, there is probably a problem with the foundation brake. Check the following and reference CVSA out-of-service criteria:

Component	Cause	Action
Brake drums	Cracked or out of round	Replace or check drum run out
Brake shoes	Shoe span out of spec	Refer to OEM specs and replace if necessary
Brake shoes	Uneven lining wear	Check spider concentricity
Brake shoes	Shoe pad missing	Remove & replace shoes
Brake shoes	Cracked shoes	Remove & replace shoes
Cam bushings	Excessive movement	Remove & replace cam bushings per OEM specs
Camshaft	Flat spots on cam head	Replace camshaft
Camshaft	Cracked/broken splines	Replace camshaft
Camshaft	Worn bearing journals	Replace camshaft
Chamber bracket	Broken/bent	Replace bracket
Clevis yoke and pin	Worn	Remove & replace
Return springs	Broken/stretched or missing	Remove & replace springs
Rollers	Flat spots, grooved pin/worn	Remove & replace roller and pin
Rollers	Wrong size	Remove & replace with correct parts
Spider anchor pins	Grooved or scored/worn	Replace spider or pins, as appropriate for OEM

Free Stroke Above the Range

If the free stroke is above the range and the applied stroke is too long, there is a problem with the foundation brake or the adjuster. Check the following:

Component	Cause	Action
Camshaft	Binding	Remove, replace, lubricate camshaft
Camshaft bushings	Excessive movement	Remove and replace cam bushings per OEM specs
Camshaft bushings	Binding shaft	Lubricate camshaft bushings or replace
Air chamber return springs	Broken, weak, missing	Replace chamber
Air chamber push rod	Binding on chamber housing	Check adjuster for proper shimming and air chamber position for proper adjuster arm length
Air system	Not exhausting completely	Check for cause of air problem and repair
Shoe return springs	Broken, weak, missing	Replace springs
Automatic brake adjuster	Unknown	Check automatic brake adjuster for proper installation. Refer to Installation Instructions on pages 4 & 5.
Automatic brake adjuster	Unknown	Refer to Automatic Brake Adjuster Checking Procedures and Operational Check on pages 9 & 10.

Free Stroke Below the Range

If the free stroke is less than 3/8”, a dragging brake can occur. Check the following:

Component	Cause	Action
Wheel bearing	Out of adjustment	Readjust per OEM specs
Automatic brake adjuster	Unknown	Check automatic brake adjuster for proper control arm position. Refer to Installation Instructions on pages 4 & 5.
Automatic brake adjuster	Unknown	Refer to Automatic Brake Adjuster Checking Procedures and Operational Check on pages 9 & 10.

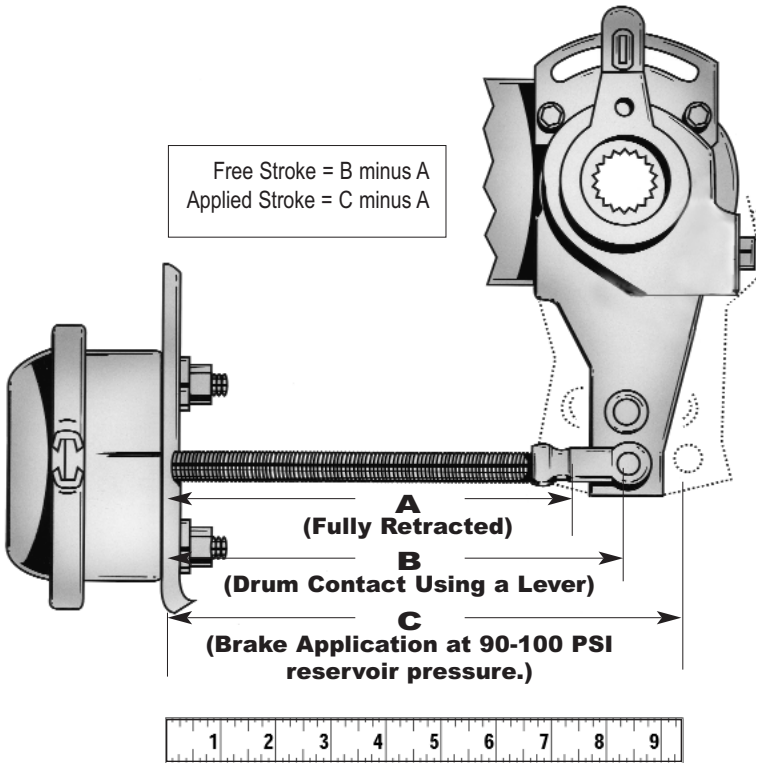

Figure 13
Stroke Measurements (taken from face of air chamber to center of clevis pin)

Automatic Brake Adjuster Checking Procedures

If the brake adjuster is not maintaining the proper applied stroke, **before removing the brake adjuster**, check the condition of the foundation brake (see pages 7 & 8). **If after inspecting the foundation brake** no apparent problems are found, inspect the automatic brake adjuster to determine if it is operating properly. The inspection can be performed on or off the vehicle using the following procedures.

Note:
- Block wheels to prevent vehicle from rolling.
- Ensure system reservoir pressure is at 90-100 PSI.
- Check that push rod is fully retracted; apply air to release spring brake.
- If air is not available, spring brake must be manually caged back.
- Do not use air tools on brake adjuster!

On Vehicle Inspection

Component	Cause	Action
Excessive chamber push rod travel	Improper anchor bracket connection to control arm	If anchor bracket to control arm connection is worn, loose, bent or broken, it must be re-secured or replaced.
	Low clutch torque	Rotate the 7/16" adjustment hex one full turn counterclockwise. Replace brake adjuster if the torque is less than 13 ft. lbs. or no racheting sound occurs.
	Unknown	Perform automatic brake adjuster operational check (see below).

Automatic Brake Adjuster Operational Check

Functional operation of the brake adjuster can be performed on the vehicle by using the following procedure:

- Block wheels to prevent vehicle from rolling.
- Ensure reservoir pressure is at 90-100 psi.
- Check that the push rod is fully retracted; apply air to release spring brake. If air is not available, spring brake must be manually caged back.

Manually de-adjust brakes (turn adjustment hex counterclockwise one full turn) to create an excessive lining to drum clearance condition. (A ratcheting sound should occur.)

Make a full service brake application. On release, allow sufficient time for air chamber to fully retract.

During the brake release, observe rotation of the adjustment hex (attaching a wrench on the hex or scribing the hex will make this rotation easier to see).

This rotation indicates that an excessive clearance condition has been determined by the brake adjuster, and it is making an adjustment to compensate. On each subsequent brake **release**, the amount of adjustment and push rod travel will be reduced until the desired lining to drum clearance is achieved.

If rotation of the adjustment hex is not observed, refer to Foundation Brake Operational Check and Troubleshooting Procedures on pages 7 & 8. If foundation brake assembly checks out okay and hex still does not turn, check control arm and mounting bracket for possible worn, bent or broken components. If the control arm and mounting bracket check out okay, replace the adjuster and hardware per Installation Instructions on pages 4 & 5.

Off Vehicle Inspection

Component	Cause	Action
Adjuster not functioning properly	Low clutch torque	Place adjuster arm in vise. Rotate the 7/16" adjustment hex counterclockwise one full turn to check de-adjustment torque. After control arm stops rotating, a minimum of 13 ft. lbs. will be required and a ratcheting sound will occur. Replace brake adjuster if the torque is less than 13 ft. lbs. or no de-adjustment ratcheting sound is present.
	Control Arm slippage	Place adjuster arm in vise. Rotate the control arm counterclockwise until the control arm rotates to an INTERNAL STOP. If the arm slips freely, replace the brake adjuster.
	Unknown	If torque is above 13 ft. lbs., scribe a line on the adjustment hex. Manually pull the brake adjuster control arm clockwise then push back counter-clockwise. The hex will move in a clockwise direction when the control arm of the brake adjuster is pushed back counterclockwise. Replace adjuster if hex does not move.
	Worn/missing control arm wear bushing, and anchor stud pin, if applicable.	Remove and replace pin and bushings. If adjuster has passed the above checks, re-install adjuster on vehicle, with new hardware.

Typical Parts Identification and Location

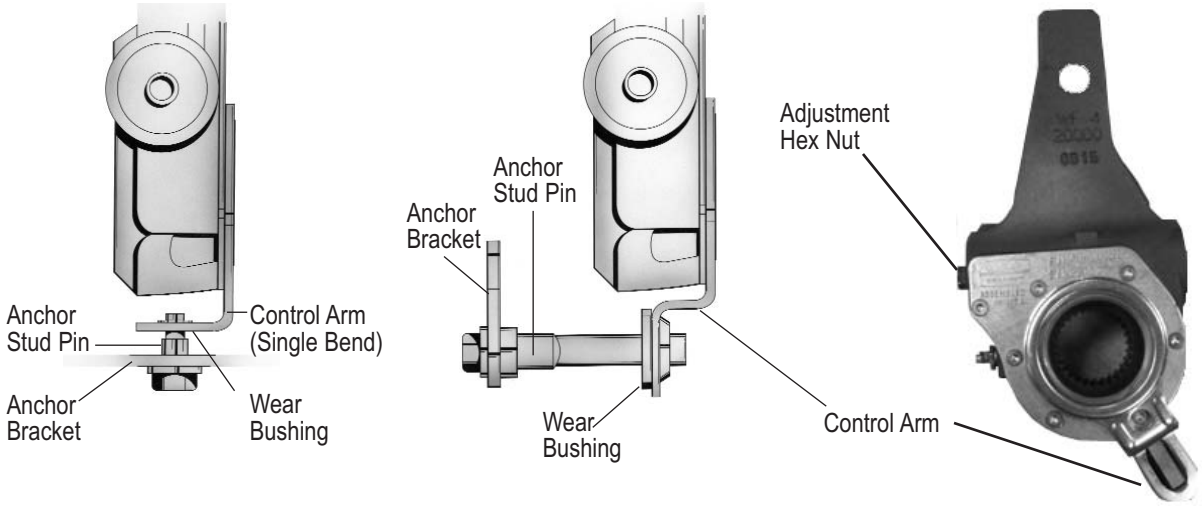

Torque Specifications

Note: Tighten all fasteners to manufacturer's recommendations unless otherwise specified below.

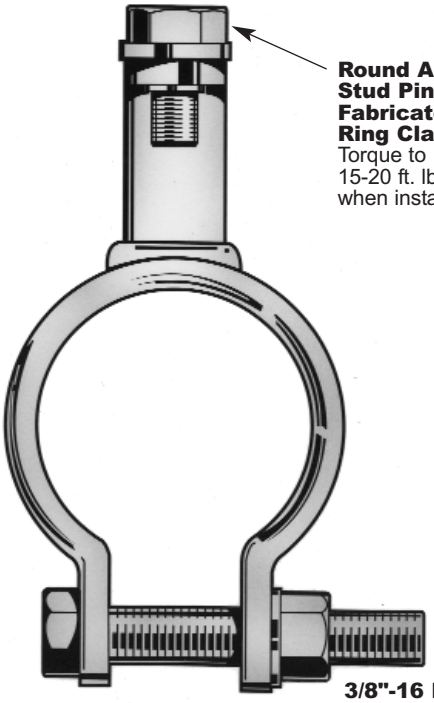

Round Anchor Stud Pin with Fabricated Ring Clamp
Torque to 15-20 ft. lbs. when installed

3/8"-16 Nut and Bolt
Torque to 15-20 ft. lbs. when installed

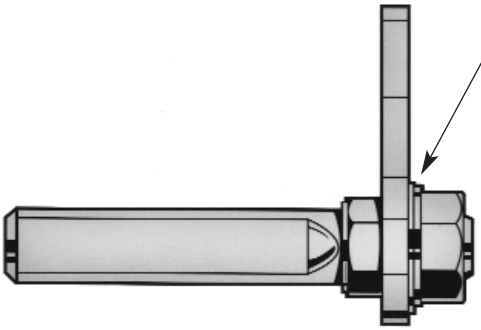

Flat Anchor Stud Pin
Torque to 40-50 ft. lbs. when installed

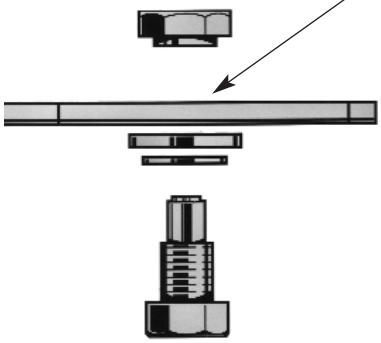

Round Anchor Stud Pin with Slide Nut
Torque to 15-20 ft. lbs. when installed

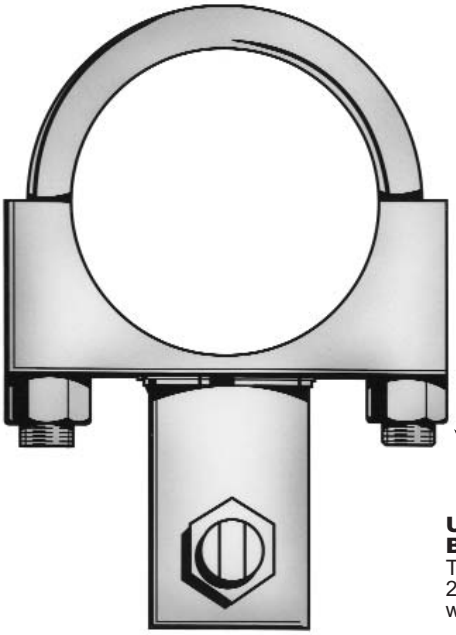

U-Bolt Style Bracket
Torque to 20-30 ft. lbs. when installed

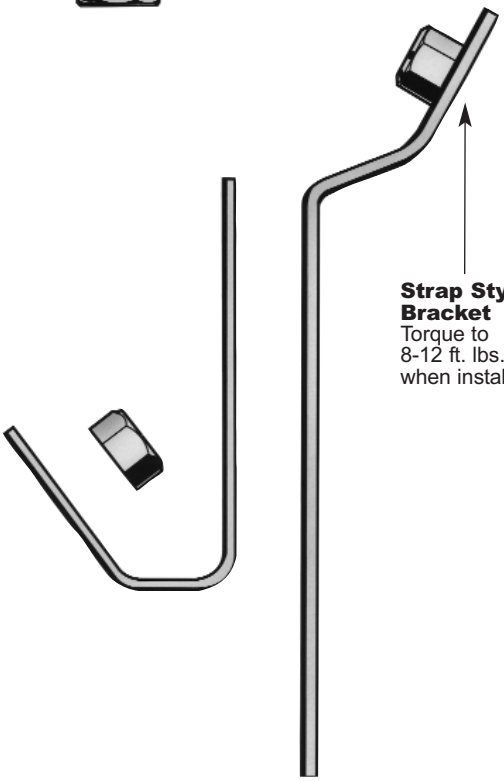

Strap Style Bracket
Torque to 8-12 ft. lbs. when installed

Frequently Asked Questions

1. Will the side of the brake adjuster with the face plate always face in?

No. Haldex adjusters are normally unhanded. Always install with the adjusting hex pointing away from the air chamber.

2. Why is there resistance when backing off the adjuster?

It takes approximately 20 lb. ft. of torque to back off the adjustment hex on a new brake adjuster. (A ratcheting sound should occur.)

3. How far do I back off the automatic brake adjuster at a brake reline? 1/2 turn.

4. How do I know if I need an offset, angled or straight-armed adjuster?

Haldex manufactures the right adjuster arm for your specific application. Haldex adjusters are unhanded (no lefts or rights) in the majority of applications. Please refer to the Haldex Parts and Cross Reference Guide for your specific application (L00090).

5. Why does my replacement ABA look different from the original I took off?

The Haldex ABA replacement adjuster has been designed to fit a number of applications. It is the same original equipment quality and design of the adjuster you removed; however, it may look different on the outside. If you use all the parts included in the kit, the results will be the same as the original equipment adjuster.

6. Why is the applied stroke pressure range 90-100 psi at the reservoir?

This is the pressure recommended by the CVSA (Commercial Vehicle Safety Alliance). Anything beyond 100 psi measures deflection within the foundation brake and not true push rod stroke.

7. Some brake chambers have round port openings and some square; what is the difference?

Standard brake chambers are identified by round ports. Long stroke chambers are identified by square ports and trapezoid ID tags.

8. Can I vary the amount of lining-to-drum clearance by moving the control arm?

No, that clearance is set at the factory. If long or short stroke continues, please refer to the foundation brake checking procedures on pages 9 & 10 of this manual.

9. Can I use an air ratchet on the adjuster?

No. It will damage the internal mechanism of the adjuster and render it inoperative.

10. Can I access the adjuster through the rear cover?

No, do not tamper with the rear cover—it will release the factory set pressure on the spring and destroy the adjuster and its ability to properly function.

11. How much control arm bushing and anchor stud pin wear is acceptable before replacement is required?

No more than 1/16."

12. What is the acceptable amount of camshaft bushing wear?

Automatic adjusters cannot compensate for worn foundation brake parts. Please refer to the foundation brake manufacturer's recommendations for maximum bushing and camshaft wear limits.

13. Can wheel bearing adjustment affect the brake adjuster?

Yes. Improper wheel bearing adjustment could result in improper brake adjustment. It is necessary to refer to the axle manufacturer's wheel bearing adjustment recommendations. A loose bearing preload could cause a tight brake.

14. Are all Haldex automatic brake adjusters pre-lubed?

Yes. All Haldex brake adjusters are lubricated at the factory. Please consult the Service and Lubrication Section on Page 6 for proper lubrication guidelines.

(continued on page 13)

Frequently Asked Questions (continued)

15. Can I use moly lube with the Haldex automatic brake adjuster?

No. A high concentration of moly-disulfide can lower the friction capabilities in the adjusting clutch parts and decrease automatic adjustment reliability.

16. Can I purchase anchor bracket wear items separately (i.e., anchor stud pins, wear bushings)?

Yes. Normal wear items like anchor stud pins and wear bushings are available. Refer to the Haldex Parts and Cross Reference Guide, L00090. Otherwise, contact Haldex Technical Assistance for the appropriate bracket kit at 1-800-643-2374.

17. Does the control arm need to be properly set and secured?

Yes. Without proper placement and attachment, the adjuster will not function properly. Make sure the control arm, anchor bracket and wear items are in good working order to assure the adjuster will operate as designed.

18. If automatic adjustment stops, can I operate as a manual brake adjuster?

No. Completely check out foundation brake and adjuster to determine cause of problem. Repair or replace as needed to restore automatic adjustment.

Additional Information Available

Additional parts and service information on Haldex Automatic Brake Adjusters may be found in the following materials:

Service Information

Installation and Maintenance Wall Chart L60047

Service Manual (Truck/Trailer) L30037

Parts Information

Parts and Cross Reference Guide (Truck/Trailer) . . . L00090

These materials may be ordered by contacting your Customer Service Representative at 1-800-643-2374. Or, you may log in to our website www.hbsna.com with your customer password to place your order.

Notes

Notes

AGENDA

Austria
Haldex Wien Ges.m.b.H.
Vienna
Tel:: +43 1 865 1640
Fax: +43 1 865 164027
E-Mail: info.austria@haldex.com

Belgium
Haldex N.V./S.A.
Balegem (Ghent)
Tel.: +32 9 363 90 00
Fax: +32 9 363 90 09
E-Mail: info.hbe@haldex.com

Brazil
Haldex do Brasil
São Paulo
Tel.: +55 11 213 55 000
Fax: +55 11 503 49 515
E-Mail: info@hbr.haldex.com

Canada
Haldex Ltd
Guelph, Ontario
Tel.: +1 519 826 7723
Fax :+1 519 826 9497
E-Mail: CSCanada@haldex.com

China
Haldex International Trading Co. Ltd.
Shanghai
Tel.: +86 21 5240 0338
Fax: +86 21 5240 0177
E-Mail: info@hcn.haldex.com

France
Haldex Europe SAS
Weyersheim (Strasbourg)
Tel.: +33 3 88 68 22 00
Fax: +33 3 88 68 22 09
E-Mail: info.heu@haldex.com

Germany
Haldex Brake Products GmbH
Heidelberg
Tel.: +49 6221 7030
Fax: +49 6221 703400
E-Mail: info@haldex.com

Hungary
Haldex Hungary Kft.
Szentlörinckáta
Tel.: +36 29 631 300
Fax: +36 29 631 301
E-Mail: info.hu.eu@haldex.com

India
Haldex India Limited
Nasik
Tel.: +91 253 2380094
Fax +91 253 2380729
E-Mail: haldex@haldexindialtd.com

Italy
Haldex Italia Srl.
Muggio (Milano)
Tel.: +39 039 278 23 50
Fax: +39 039 796 525
E-Mail: info@hit.haldex.com

Poland
Haldex Sp. z.o.o.
Praszka
Tel.: +48 34 350 11 00
Fax: +48 34 350 11 11
E-Mail: info@haldex.net.pl

South Korea
Haldex Korea Ltd.
Seoul
Tel.: +82 2 2636 7545
Fax: +82 2 2636 7548
E-Mail: info.hkr@haldex.com

Russia
OOO Haldex RUS
Moscow
Tel..: + 7 495 747 59 56
Fax: +7 495 786 39 70
E-Mail: info.russia@haldex.com

Spain
Haldex España S.A.
Parets del Valles (Barcelona)
Tel.: +34 93 573 10 30
Fax: +34 93 573 07 28
E-Mail: haldexespana@haldex.com

Sweden
Haldex Brake Products AB
Landskrona
Tel.: +46 418 47 60 00
Fax: +46 418 47 60 01
E-Mail: info@hbpse.haldex.com

United Kingdom
Haldex Ltd.
Newton Aycliffe
Tel.: +44 1325 310 110
Fax: +44 1325 311 834
E-Mail: aycliffe.info@haldex.com

Haldex Brake Products Ltd.
Redditch
Tel.: +44 1527 499 499
Fax: +44 1527 499 500
E-Mail: info@haldex.com

USA
Haldex Brake Products Corp.
Kansas City MO
Tel.: +1 816 891 2470
Fax: +1 816 891 9447
E-Mail: hbsna@haldex.com

©2007, This material may contain Haldex trademarks and third party trademarks, trade names, corporate logos, graphics and emblems which are the property of their respective companies. The contents of this document may not be copied, distributed, adapted or displayed for commercial purposes or otherwise without prior written consent from Haldex.

Haldex

Commercial Vehicle Systems

www.haldex.com

www.hbsna.com

L30037 US 1/07 15M ART (1/07 cover redesign only)

AGENDA

AA1 and S-ABA Automatic Brake Adjuster Installation Guide (Rev. 2/11)

Haldex

PRODUCT IDENTIFICATION

AA1

The control arm of the AA1 automatic brake adjuster must be placed with the "pointer in the notch," for proper initial setup. Spring brakes must be fully released when setting up the AA1.

Part Number

409-10_ _ _ = Reduced maintenance adjuster

429-10_ _ _ = No-Lube adjuster

Serial Number

First 3 digits = Day of year built

Last 2 digits = Year of build

After Sept. 1989
The Part No. P/N40910224 would be our adjuster part number 409-10224.

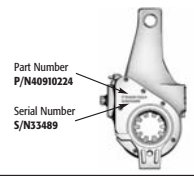

Prior to Sept. 1989
The first three numbers stamped on the cover plate is the brake adjuster part number. For example: 224 would be our adjuster part number 409-10224.

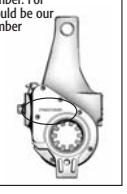

S-ABA

The control arm on the S-ABA can be located anywhere within the range of the mounting hardware. No installation pointer is required with the S-ABA because of the flexible positioning of the control arm. All other S-ABA installation procedures are the same as the AA1.

Part Number

409-20_ _ _ = S-ABA Brake Adjuster

Serial Number

First 3 digits = Day of year built

Last 2 digits = Year of build

The Part No. P/N40920002 would be our adjuster part number 409-20002.

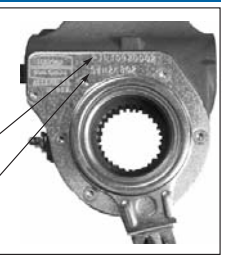

INSTALLATION INSTRUCTIONS

STEP 1
Block wheels to prevent vehicle from rolling. Ensure system tank pressure is above 100 PSI. Check that the push rod is fully retracted, apply air to release spring brake. If air is not available, spring brake must be manually caged back. Install anchor bracket loosely as illustrated. Some strap brackets have two mounting holes. Proper mounting location is determined by the length of adjuster arm. 5" and 5 1/2" adjuster arm lengths utilize the shorter hole location while 6" and 6 1/2" length adjusters utilize the longer hole locations. Do not tighten anchor bracket fasteners at this time. Apply "Anti-Seize" type lubricant to camshaft splines.

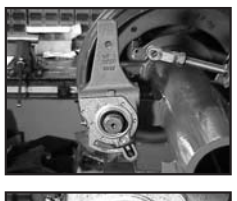

STEP 2
Place at least one inner cam washer on shaft. Install adjuster with the 7/16" adjusting hex pointing away from the spring brake or service chamber.

STEP 3
Secure adjuster to shaft with snap ring. Install enough washers (per TMC recommended practice RP609-A) to reduce end play to less than .060".

STEP 4
Rotate the 7/16" adjusting hex nut clockwise until the clevis hole lines up with the brake adjuster arm hole. Do not pull push rod out to meet clevis.

STEP 5
Apply anti-seize type lubricant to clevis pin, install and secure with cotter pin.

STEP 6 - FOR S-ABA ONLY
For the S-ABA, the control arm position can be set anywhere within the slotted area of the bracket and the adjuster will function properly. Haldex recommends a "common position" for all installations–all the way towards the axle, until the control arm comes to the end of the slotted bracket.

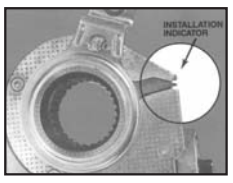

STEP 6 - FOR AA1 ONLY
For the AA1, rotate the control arm away from adjusting hex, toward the spring brake or service chamber until it comes to a definite internal stop. The installation indicator must fall within the slotted area with the brake fully released. The view of the indicator varies from side to side. Haldex AA1 trailer adjusters are unhanded and are used on both axle sides.

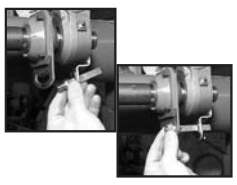

STEP 7
Insert the flat end of the anchor stud through the control arm bushing. Push the threaded end into the anchor plate slot and loosely install flange nut. Installation of different style anchor brackets and attachment methods follow a similar procedure.

STEP 8
After positioning control arm and anchor pin to desired location, tighten the flange nut to 40-50 ft. lbs. Note: S-ABA control arm position is all the way toward the axle. AA1 control arm position is such that the installation indicator falls within the control cover slot. These common positions work well for most applications.

STEP 9
The adjuster must be manually adjusted at this time. Adjust brakes by rotating the 7/16" adjusting hex clockwise until the lining lightly contacts the drum.

STEP 10
Back-off the adjuster by rotating adjusting hex counter-clockwise 1/2 turn. A ratcheting sound will occur, which is normal. Never use an impact wrench or internal damage will occur.

Final Inspection
Recheck all fasteners for proper installation. Before releasing vehicle, actuate brakes several times assuring no binding or partial release. Full pushrod travel and release is necessary for proper brake adjustment.

TYPICAL APPLICATIONS

Steer Axle

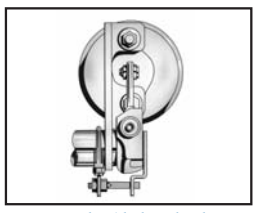

Steer Axle with clamp bracket and flat anchor stud

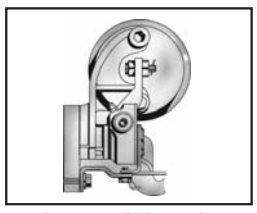

Mack 16,000# or higher rated Steer Axle with spider mounted bracket

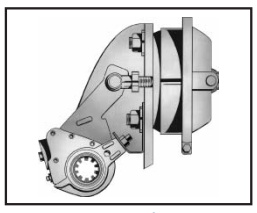

Steer Axle with strap bracket

Drive Axle

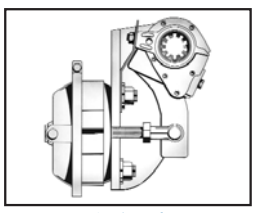

16° Drive Axle with strap bracket

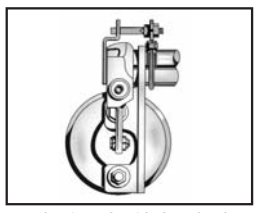

Mack Drive Axle with clamp bracket and flat anchor stud

Trailer Axle

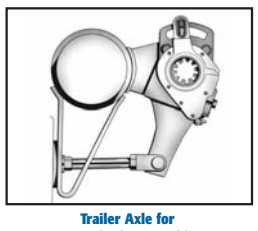

Trailer Axle for 16 1/2" brake assemblies

Trailer Axle for 12 1/4" brake assemblies

Automatic Brake Adjuster Maintenance

WARNING: Haldex strongly recommends routine visual checks be performed at EACH maintenance service interval. Foundation brake operational checks utilizing CVSA level 1 applied stroke criteria should always be utilized. Manual adjustment of automatic adjuster can disguise hidden problems within the foundation brake. Brake components such as s-cams, bushings, return springs, actuators, drums and adjuster installation MUST be within the manufacturer's specifications. Adjuster control arms, wear bushings or attaching hardware that demonstrate visual damage, or which fail the operational checks, MUST be replaced immediately. Automatic Adjusters should NEVER be operated as manual adjusters except as may be necessary to get the vehicle off the road for service. **Make sure the wheels are blocked before servicing the vehicle. Release the parking brake and check that the push rod is fully released. If the push rod is not fully released, the adjuster can not be inspected properly.**

MEASURE PUSH ROD STROKE

The applied stroke of the brake should be checked per CVSA guidelines by making a brake application at 90-100 psi reservoir pressure. The maximum applied push rod stroke, as recommended by the spring brake manufacturers, must be at or less than the following:

Standard Clamp Type Brake Chamber

Type	Adjustment Limit	Type	Adjustment Limit
9	1-3/8"	24	1-3/4"
12	1-3/8"	30	2"
16	1-3/4"	36	2-1/4"
20	1-3/4"		

Long Stroke Type Brake Chamber

Type	Adjustment Limit	Type	Adjustment Limit
16L	2"	24LS	2-1/2"
20L	2"	30LS	2-1/2"
24L	2"		

* Long stroke chambers are identified with square air port or port bosses and special trapezoid ID tags.

90-100 psi Reservoir Pressure

How To Measure

Free Stroke is the amount of movement of the adjuster arm required to move the brake shoes against the drum. With brakes released, measure from the face of the chamber to the center of the clevis pin - **"A" Fully Retracted**. Use a lever to move the brake adjuster until the brake shoes contact the drum - **"B" Drum Contact Using a Lever**. The difference between the fully retracted and drum contact measurement "B" minus "A" is the free stroke. The free stroke range should fall between 3/8" and 3/4".

Note: Stroke Measurements are taken from face of air chamber to center of clevis pin.

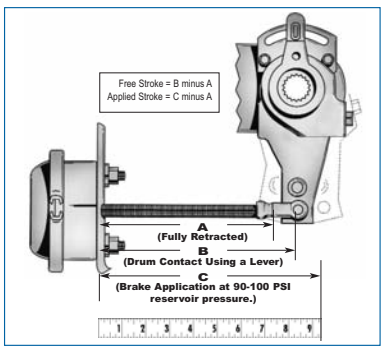

SERVICE & LUBRICATION INTERVALS

Adjuster Type	Manufacture Date	Lubrication Interval	Type of Lubricant	Visual Check Interval
Standard Adjuster 409-10...	Prior to 6/1/96	50,000 miles or every 3 months	Standard Chassis Grease	Each Preventative Maintenance Service Interval
Reduced Maintenance Adjuster 409-10...	After 6/1/96	Once a year	Standard Chassis Grease	Each Preventative Maintenance Service Interval
No-Lube™ Adjuster 429-10...	After 6/1/96	None	Sealed Unit	Each Preventative Maintenance Service Interval
S-ABA Adjuster 409-20...	n/a	Once a year	Standard Chassis Grease	Each Preventative Maintenance Service Interval

Notes:

No-Lube™ automatic brake adjusters are manufactured without a grease fitting and are identified by a 429 prefix.

Moly-disulfide grease should not be used because it may affect the function of the internal friction clutches and reduce the reliability of the automatic adjustment.

In no case should the lubrication interval exceed the published intervals shown here.

Maintenance Inspection

During normal lubrication intervals, visually inspect brake adjuster, anchor bracket and control arm for damage. Check that anchor bracket and control arm are tight and the control arm is in its correct position. (Refer to Installation Step 6 AA1 and Step 6 S-ABA)

Rotate the adjustment hex counter-clockwise approximately one full turn to create excessive lining to drum clearance. Make a brake application; on release observe the adjusting hex rotation. This rotation indicates the adjuster is making an adjustment and is working properly. Attaching a wrench to the adjusting hex will make this rotation easier to see. On each subsequent brake release, the amount of push rod stroke will be reduced until the proper lining to drum clearance is achieved.

BRAKE RELINE/CHECKING PROCEDURE

This Operational Check should also be performed when installing brake linings. If the push rod stroke is incorrect, see the information listed in the Brake Troubleshooting Section.

Operational Check

During reline, check the de-adjustment torque. Place a torque wrench on the adjusting hex. Turn the hex counter-clockwise and check that the clutch does not slip at a torque less than 13 ft. lbs. **A ratcheting sound should occur.** If the clutch slips at a lesser torque, the adjuster must be replaced. After test, manually adjust as shown in Installation Steps 9 and 10.

FOUNDATION BRAKE AND BRAKE ADJUSTER TROUBLESHOOTING

The adjuster is not a cure-all for foundation brake deficiencies. If the proper push rod stroke and lining to drum clearance can not be maintained, be sure to thoroughly check the other brake components. This could also help to avoid unnecessary adjuster replacement.

Troubleshooting Checklist

When checking the foundation brake look for:
- Worn cam shaft and bushings
- Broken shoe return springs
- Air chambers not releasing
- Worn or broken brake components
- Loose wheel bearings

When checking the adjuster look for:
- Proper push rod stroke
- Proper adjuster installation
- Loose, broken, bent or worn adjuster anchor brackets or control arms
- Worn clutch assembly (see Operational Check)
- Adjuster not fully releasing

Haldex

Haldex Commercial Vehicle Systems

Haldex Brake Products Corporation
10930 North Pomona Avenue
Kansas City, MO 64153-1256
Phone: (816) 891-2470
Fax: (816) 891-9447

Haldex Limited/Haldex Limitée
500 Pinebush Road, Unit 1
Cambridge, ON N1T 0A5 CANADA
Phone: (519) 621-6722
Fax: (519) 621-3924

Contact the Haldex Technical Department at 800-643-2374 for further assistance.

www.haldex.com

L60047 US Rev. 2/11 2.5M ALP

SERVICE PROCEDURE

14503R1
MAY 2014

SUBJECT: **VOLUNTARY EMISSIONS RECALL**
Navistar, Inc. has decided that a defect which relates to engine emissions exists in certain 1300 FBC, DuraStar®, and WorkStar® model trucks and CE C, CE S, HC C, RE C, and RE S model buses built 28 February 2013 thru 16 December 2013 with 2013 MaxxForce® DT, 9, and 10 engines.

DEFECT DESCRIPTION

This emissions recall applies to bus and truck models that were built with 2013 MaxxForce® DT, 9, and 10 engines. This recall will require recalibration of the engine ECM. This will improve Heavy Duty On Board Diagnostics and reduce frequent aftertreatment regeneration events.

REVISION STATEMENT

Revised SRT times.

MODELS INVOLVED

This Voluntary Emissions Recall involves 1300 FBC, DuraStar®, and WorkStar®, model trucks and CE C, CE S, HC C, RE C, and RE S model buses built 28 February 2013 thru 16 December 2013 with 2013 MaxxForce® DT, 9, and 10 engines.

PARTS INFORMATION

There are no parts for this campaign.

© 2014 Navistar, Inc. All rights reserved. All marks are trademarks of their respective owners.

SERVICE PROCEDURE

WARNING! PARK VEHICLE ON HARD FLAT SURFACE, TURN THE ENGINE OFF, SET THE PARKING BRAKE AND INSTALL WHEEL CHOCKS TO PREVENT THE VEHICLE FROM MOVING IN BOTH DIRECTIONS. FAILURE TO COMPLY MAY RESULT IN PROPERTY DAMAGE, PERSONAL INJURY AND / OR DEATH.

WARNING! ALWAYS WEAR SAFE EYE PROTECTION WHEN PERFORMING VEHICLE MAINTENANCE. FAILURE TO COMPLY MAY RESULT IN PERSONAL INJURY AND / OR DEATH.

1. Park vehicle on a flat surface with wheels straight ahead.
2. Shift transmission to park or neutral and set parking brakes.
3. Install wheel chocks.
4. Verify that ECM has latest software by referring to vehicle calibration scorecard in Service Portal[SM] system.
    a. If calibration scorecard indicates that calibration is not current, engine must be reprogrammed to raise calibration to latest level. Proceed to Step 5.
    b. If calibration scorecard indicates calibration is current, engine does not need to be reprogrammed.
        i. Dealers and customers operating in California must proceed to Step 7.
        ii. No further action is required for dealers and customers operating outside California. Proceed to Step 8.

NOTE: If AutoUpgrade functionality is not available, use NETS.

5. Program ECM using NETS or AutoUpgrade.

NOTE: For instructions, refer to IK2600010 – NETS Programming and Troubleshooting Guide. Use Update to Latest Calibration programming option, or IK2600082 – Auto Upgrade Programming Instructions.

© 2014 Navistar, Inc. All rights reserved. All marks are trademarks of their respective owners.

These articles contain general information about each reprogramming method and software, with links to specific instructions.

6. If assistance is needed, contact Vehicle Programming by creating an iKNow case file or calling 1-800-336-4500, options 3, 1, 1.

Additional Requirements for Dealers and Customers Operating in California

NOTE: Following step is required only for dealers and customers operating in the state of California.

7. After completing this recall, dealer must fill out salmon-colored Proof of Correction certificate and provide a copy to customer.

    a. Use either Figure 1 (certificate to print on white paper) or Figure 2 (certificate to print on salmon-colored paper) to print DMV certificates.

8. Remove wheel chocks.

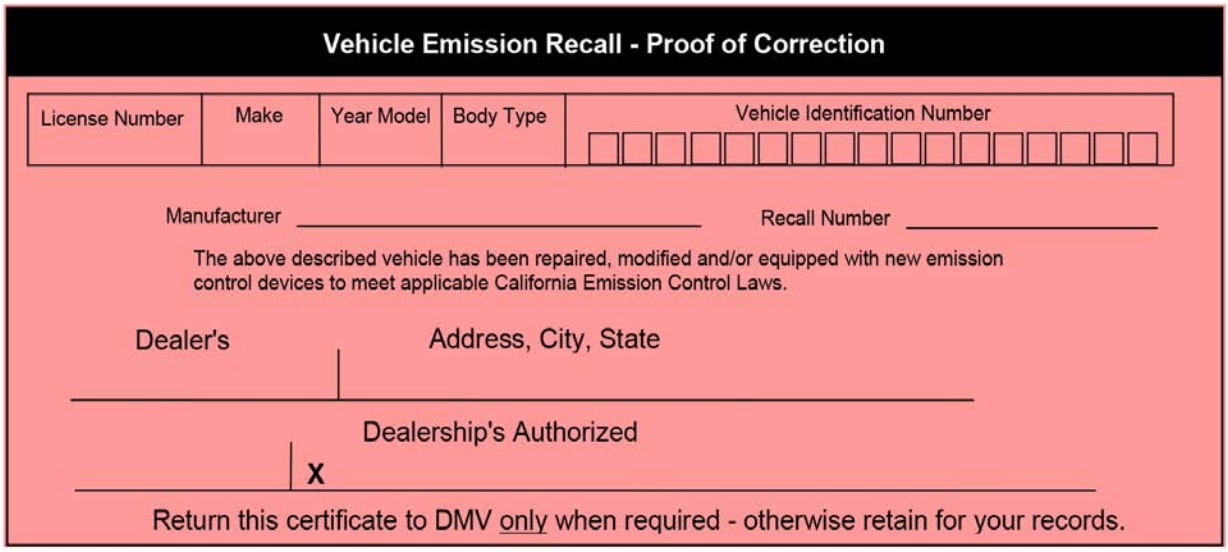

Vehicle Emission Recall - Proof of Correction

License Number	Make	Year Model	Body Type	Vehicle Identification Number

Manufacturer _____ Recall Number _____

The above described vehicle has been repaired, modified and/or equipped with new emission control devices to meet applicable California Emission Control Laws.

Dealer's Address, City, State

Dealership's Authorized

X

Return this certificate to DMV only when required - otherwise retain for your records.

0000047743

Figure 1. DMV Certificate, Salmon (Print on 8.5 x 11 inch White Paper).

© 2014 Navistar, Inc. All rights reserved. All marks are trademarks of their respective owners.

Vehicle Emission Recall - Proof of Correction

License Number	Make	Year Model	Body Type	Vehicle Identification Number

Manufacturer _____ Recall Number _____

The above described vehicle has been repaired, modified and/or equipped with new emission control devices to meet applicable California Emission Control Laws.

Dealer's Address, City, State

Dealership's Authorized

X

Return this certificate to DMV only when required - otherwise retain for your records.

0000047729

Figure 2. DMV Certificate, White (Print on 8.5 x 11 inch Salmon Paper).

END OF SERVICE PROCEDURE

LABOR INFORMATION

Operation Number	Description	Time
A40-14503-1	ECM Re-Flash - For Claims 05 May 2014 and Prior	0.2 hr
A40-14503-2	ECM Re-Flash - For Claims 06 May 2014 and Later	0.4 hr

CAMPAIGN IDENTIFICATION LABEL

Each vehicle corrected in accordance with this campaign must be marked with a CTS-1075 Campaign Identification Label.

Complete the label and attach on a clean surface next to the vehicle identification number (VIN) plate.

© 2014 Navistar, Inc. All rights reserved. All marks are trademarks of their respective owners.

ADMINSTRATIVE / DEALER RESPONSIBILITIES

WARRANTY CLAIMS

Warranty claim expense is to be charged to Warranty. Claims are to be submitted in the normal manner, making reference to Emissions Recall 14503.

It is important that the coding be completed properly to assist in processing the warranty claim. Complete instructions will be found in the Warranty Policy Manual, Section 7.1.8.

As with all claim submission, items acquired locally must be submitted in the "Other Charges" tab. The cost of any bulk items (such as a bag of cable tie straps, roll of wire, barrel of oil, or a tube of silicone) should be prorated for the cost of the individual pieces / amount used during each repair.

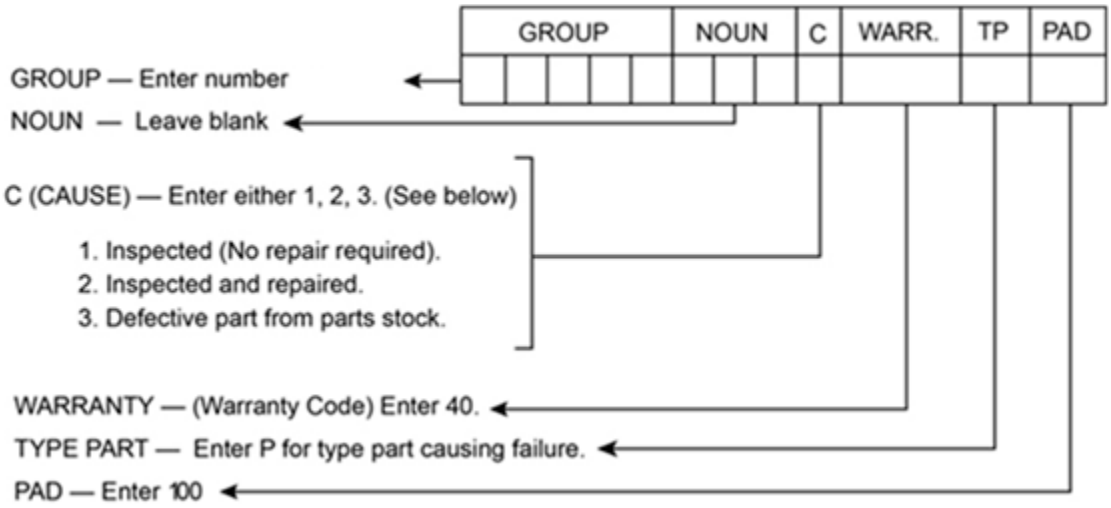

UNITED STATES AND POSSESSIONS

The National Traffic and Motor Vehicle Safety Act, as amended, provides that each vehicle that is subject to a vehicle recall campaign must be adequately repaired within a reasonable time after the owner has tendered it for repair. A failure to adequately repair within 60 days after a tender of a vehicle is prima facie evidence of failure to repair within a reasonable time. If the condition is not adequately repaired within 60 days, the owner may be entitled to replacement with an identical or reasonable equivalent vehicle at no charge, or to a refund of the purchase price less a reasonable allowance for depreciation.

© 2014 Navistar, Inc. All rights reserved. All marks are trademarks of their respective owners.

Dealers must correct all vehicles subject to this campaign at no charge to the owner, regardless of mileage, age of vehicle, or ownership, from this time forward.

Dealers should proceed immediately to make necessary correction to units in inventory. All inventory vehicles subject to this recall campaign must be corrected prior to sale, transfer or delivery. If vehicles have been sold or transferred and you are in receipt of Customer Notification Letters and Authorization for Recall Service cards for those vehicles, the transfer location or customer must be notified immediately from your dealer location.

Dealers must make every effort to promptly schedule an appointment with each owner to repair his or her vehicle as soon as possible. However, consistent with the customer notification, dealers are expected to complete the repairs on the mutually agreed upon service date.

Dealers involved in the recall process will be furnished a listing of owner names and addresses to enable them to follow up with owners and have the vehicles corrected. Use of this listing must be limited to this campaign because the list may contain information obtained from state motor vehicle registration records, and the use of such motor vehicle registration data for purposes other than this campaign is a violation of law in several states.

CANADA

Dealers must correct all vehicles subject to this campaign at no charge to the owner, regardless of mileage, age of vehicle, or ownership, from this time forward.

Dealers should proceed immediately to make necessary correction to units in inventory. All inventory vehicles subject to this recall campaign must be corrected prior to sale, transfer or delivery. If vehicles have been sold or transferred and you are in receipt of Customer Notification Letters and Authorization for Recall Service cards for those vehicles, the transfer location or customer must be notified immediately from your dealer location.

Dealers must make every effort to promptly schedule an appointment with each owner to repair his or her vehicle as soon as possible. However, consistent with the customer notification, dealers are expected to complete the repairs on the mutually agreed upon service date.

Dealers involved in the recall process will be furnished a listing of owner names and addresses to enable them to follow up with owners and have the vehicles corrected. Use of this listing must be limited to this campaign because the list may contain information obtained from state motor vehicle registration records, and the use of such motor vehicle registration data for purposes other than this campaign is a violation of law in several states.

© 2014 Navistar, Inc. All rights reserved. All marks are trademarks of their respective owners.

EXPORT

Export Distributors should proceed immediately to make necessary correction to units in inventory. All inventory vehicles subject to this recall campaign must be corrected prior to sale, transfer or delivery. If vehicles have been sold or transferred and you are in receipt of Customer Notification Letters and Authorization for Recall Service cards for those vehicles, the transfer location or customer must be notified immediately from your distributor location.

Export Distributors are to submit warranty claims in the usual manner making reference to this recall number.

Export Distributors are expected to provide full cooperation and follow-up with respect to this important subject matter. If you have any questions or need further assistance, please contact the Regional Service Manager at your regional office.

NAVISTAR, INC.

© 2014 Navistar, Inc. All rights reserved. All marks are trademarks of their respective owners.

SERVICE PROCEDURE

14510
JULY 2014

SUBJECT: **VOLUNTARY EMISSIONS RECALL**
Navistar, Inc. has decided that a defect relating to engine emissions exists in certain DuraStar® and WorkStar® models and in CE C, CE S, HC C, RC C, RE C, and RE S model buses built 16 June 2009 thru 18 March 2013 with 2010, 2011, and 2012 model year (Pre-OBD) MaxxForce® DT engines with feature codes 12NUN, 12NUP, 12NUR, 12NUS, or 12NUT.

DEFECT DESCRIPTION

This emissions recall applies to truck and bus models built with 2010, 2011, and 2012 model year (Pre-OBD) MaxxForce® DT engines. This recall will require recalibration of the engine ECM software. The new calibration will improve Diesel Particulate Filter (DPF) regeneration performance and reduce the frequency of exhaust system regeneration events. The software is applicable only to certain vehicles marked in the Service Portal℠ with Voluntary Emissions Recall 14510.

MODELS INVOLVED

This Voluntary Emissions Recall involves DuraStar® and WorkStar® models built 16 June 2009 thru 18 March 2013 and in CE C, CE S, HC C, RC C, RE C, and RE S model buses built 25 September 2009 thru 26 February 2013 with 2010, 2011, and 2012 model year (Pre-OBD) MaxxForce® DT engines with feature codes 12NUN, 12NUP, 12NUR, 12NUS, or 12NUT.

PARTS INFORMATION

There are no parts for this campaign.

© 2014 Navistar, Inc. All rights reserved. All marks are trademarks of their respective owners.

SERVICE PROCEDURE

WARNING! PARK VEHICLE ON HARD FLAT SURFACE, TURN THE ENGINE OFF, SET THE PARKING BRAKE AND INSTALL WHEEL CHOCKS TO PREVENT THE VEHICLE FROM MOVING IN BOTH DIRECTIONS. FAILURE TO COMPLY MAY RESULT IN PROPERTY DAMAGE, PERSONAL INJURY, AND / OR DEATH.

WARNING! ALWAYS WEAR SAFE EYE PROTECTION WHEN PERFORMING VEHICLE MAINTENANCE. FAILURE TO COMPLY MAY RESULT IN PERSONAL INJURY AND / OR DEATH.

1. Bring vehicle into shop and park on flat surface.

2. Shift transmission to Park or Neutral and set parking brakes.

3. Install wheel chocks.

4. Verify that Engine Control Module (ECM) has latest software by referring to vehicle calibration scorecard in Service Portal℠ system.

    a. If calibration scorecard indicates that calibration is not current, engine must be reprogrammed to raise calibration to latest level. Proceed to Step 5.

    b. If calibration scorecard indicates calibration is current, engine does not need to be reprogrammed.

        i. Dealers and customers operating in California must proceed to Step 7.

        ii. No further action is required for dealers and customers operating outside California. Proceed to Step 8.

NOTE: If AutoUpgrade functionality is not available, use NETS.

NOTE: If vehicle you are working on has custom programmable parameters, and you are using NETS, and programming as a blank module, Save a ServiceMaxx™ template of all parameters before programming so custom programmable parameters can be reset after programing.

5. Program ECM using NETS or AutoUpgrade.

© 2014 Navistar, Inc. All rights reserved. All marks are trademarks of their respective owners.

NOTE: For instructions, refer to IK2600010 – NETS Programming and Troubleshooting Guide. Use Update to Latest Calibration programming option, or IK2600082 – Auto Upgrade Programming Instructions.

These articles contain general information about each reprogramming method and software, with links to specific instructions.

6. If assistance is needed, contact Vehicle Programming by creating an iKNow case file or calling 1-800-336-4500, options 3, 1, 1.

Additional Requirements for Dealers and Customers Operating in California

NOTE: The following step is required only for dealers and customers operating in the state of California.

7. After completing this recall, dealer must fill out salmon-colored Proof of Correction certificate and provide a copy to customer.

    a. Use either Figure 1 (certificate to color print on white paper) or Figure 2 (certificate to print on salmon-colored paper) to print DMV certificates.

8. Remove wheel chocks.

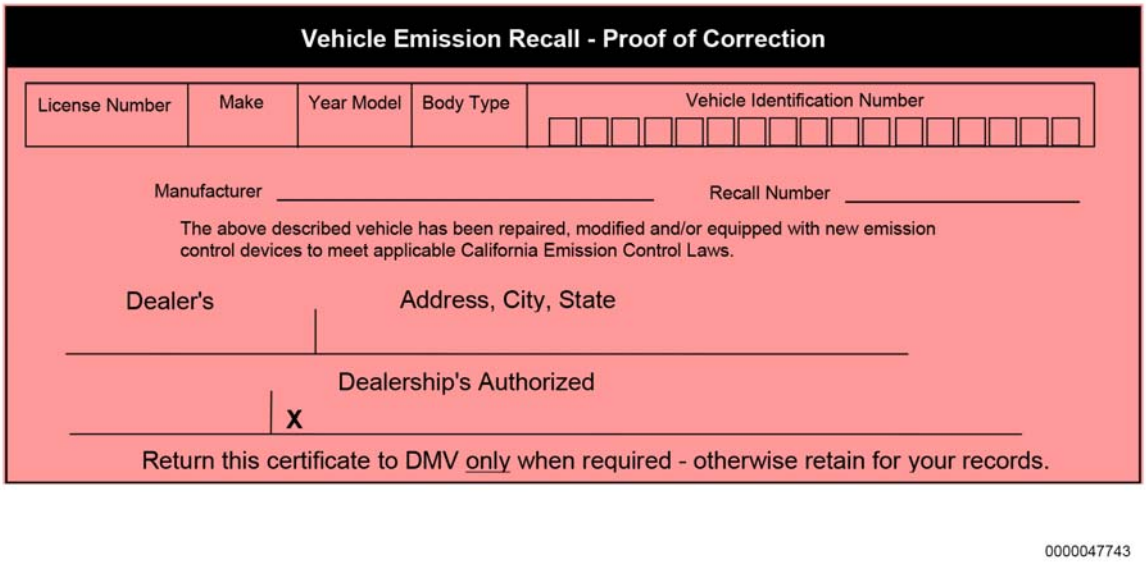

Vehicle Emission Recall - Proof of Correction

License Number	Make	Year Model	Body Type	Vehicle Identification Number

Manufacturer _____ Recall Number _____

The above described vehicle has been repaired, modified and/or equipped with new emission control devices to meet applicable California Emission Control Laws.

Dealer's Address, City, State

Dealership's Authorized

X

Return this certificate to DMV only when required - otherwise retain for your records.

0000047743

Figure 1. DMV Certificate, Salmon (Print on 8.5 x 11 inch White Paper).

© 2014 Navistar, Inc. All rights reserved. All marks are trademarks of their respective owners.

Vehicle Emission Recall - Proof of Correction

License Number	Make	Year Model	Body Type	Vehicle Identification Number

Manufacturer _____ Recall Number _____

The above described vehicle has been repaired, modified and/or equipped with new emission control devices to meet applicable California Emission Control Laws.

Dealer's Address, City, State

Dealership's Authorized

X

Return this certificate to DMV only when required - otherwise retain for your records.

0000047729

Figure 2. DMV Certificate, White (Print on 8.5 x 11 inch Salmon Paper).

END OF SERVICE PROCEDURE

LABOR INFORMATION

Operation Number	Description	Time
A40-14510-1	Recalibrate ECM	0.4 hr

© 2014 Navistar, Inc. All rights reserved. All marks are trademarks of their respective owners.

CAMPAIGN IDENTIFICATION LABEL

Each vehicle corrected in accordance with this campaign must be marked with a CTS-1075 Campaign Identification Label.

Complete the label and attach on a clean surface next to the vehicle identification number (VIN) plate.

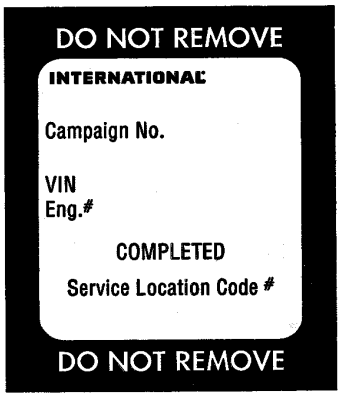

ADMINISTRATIVE / DEALER RESPONSIBILITIES

WARRANTY CLAIMS

Warranty claim expense is to be charged to Warranty. Claims are to be submitted in the normal manner, making reference to Safety Recall 14510.

It is important that the coding be completed properly to assist in processing the warranty claim. Complete instructions will be found in the Warranty Policy Manual, Section 7.1.8.

As with all claim submissions, items acquired locally must be submitted in the "Other Charges" tab. The cost of any bulk items (such as a bag of cable tie straps, roll of wire, a barrel of oil, or a tube of silicone) should be prorated for the cost of the individual pieces / amount used during each repair.

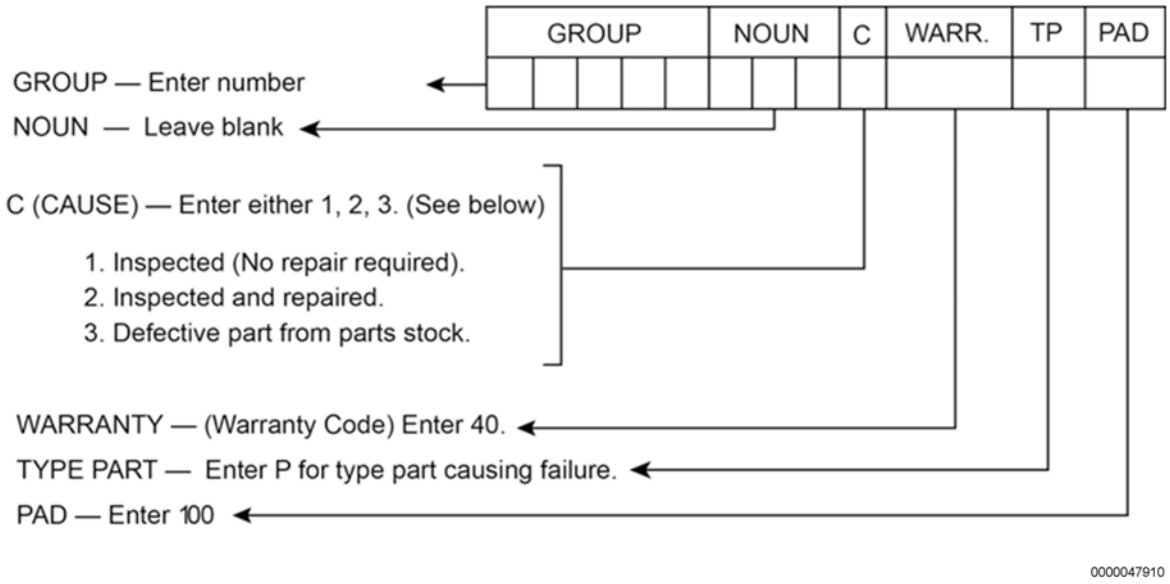

© 2014 Navistar, Inc. All rights reserved. All marks are trademarks of their respective owners.

UNITED STATES AND POSSESSIONS

The National Traffic and Motor Vehicle Safety Act, as amended, provides that each vehicle that is subject to a vehicle recall campaign must be adequately repaired within a reasonable time after the owner has tendered it for repair. A failure to adequately repair within 60 days after a tender of a vehicle is prima facie evidence of failure to repair within a reasonable time. If the condition is not adequately repaired within 60 days, the owner may be entitled to replacement with an identical or reasonable equivalent vehicle at no charge, or to a refund of the purchase price less a reasonable allowance for depreciation.

Dealers must correct all vehicles subject to this campaign at no charge to the owner, regardless of mileage, age of vehicle, or ownership, from this time forward.

Dealers should proceed immediately to make necessary correction to units in inventory. All inventory vehicles subject to this recall campaign must be corrected prior to sale, transfer or delivery. If vehicles have been sold or transferred and you are in receipt of Customer Notification Letters and Authorization for Recall Service cards for those vehicles, the transfer location or customer must be notified immediately from your dealer location.

Dealers must make every effort to promptly schedule an appointment with each owner to repair his or her vehicle as soon as possible. However, consistent with the customer notification, dealers are expected to complete the repairs on the mutually agreed upon service date.

Dealers involved in the recall process will be furnished a listing of owner names and addresses to enable them to follow up with owners and have the vehicles corrected. Use of this listing must be limited to this campaign because the list may contain information obtained from state motor vehicle registration records, and the use of such motor vehicle registration data for purposes other than this campaign is a violation of law in several states.

CANADA

Dealers must correct all vehicles subject to this campaign at no charge to the owner, regardless of mileage, age of vehicle, or ownership, from this time forward.

Dealers should proceed immediately to make necessary correction to units in inventory. All inventory vehicles subject to this recall campaign must be corrected prior to sale, transfer or delivery. If vehicles have been sold or transferred and you are in receipt of Customer Notification Letters and Authorization for Recall Service cards for those vehicles, the transfer location or customer must be notified immediately from your dealer location.

© 2014 Navistar, Inc. All rights reserved. All marks are trademarks of their respective owners.

Dealers must make every effort to promptly schedule an appointment with each owner to repair his or her vehicle as soon as possible. However, consistent with the customer notification, dealers are expected to complete the repairs on the mutually agreed upon service date.

Dealers involved in the recall process will be furnished a listing of owner names and addresses to enable them to follow up with owners and have the vehicles corrected. Use of this listing must be limited to this campaign because the list may contain information obtained from state motor vehicle registration records, and the use of such motor vehicle registration data for purposes other than this campaign is a violation of law in several states.

EXPORT

Export Distributors should proceed immediately to make necessary correction to units in inventory. All inventory vehicles subject to this recall campaign must be corrected prior to sale, transfer or delivery. If vehicles have been sold or transferred and you are in receipt of Customer Notification Letters and Authorization for Recall Service cards for those vehicles, the transfer location or customer must be notified immediately from your distributor location.

Export Distributors are to submit warranty claims in the usual manner making reference to this recall number.

Export Distributors are expected to provide full cooperation and follow-up with respect to this important subject matter. If you have any questions or need further assistance, please contact the Regional Service Manager at your regional office.

NAVISTAR, INC.

© 2014 Navistar, Inc. All rights reserved. All marks are trademarks of their respective owners.

SERVICE PROCEDURE

14512
AUGUST 2014

SUBJECT: **VOLUNTARY EMISSIONS RECALL**
Navistar, Inc. has decided that a defect relating to engine emissions exists in certain DuraStar® and WorkStar® model trucks and CE C, CE S, HC C, RE C, and RE S model buses built 28 February 2013 thru 08 July 2014 with certain 2013 and 2014 (OBD) MaxxForce® DT engines with feature codes 12NUN, 12NUP, 12NUR, 12NUS, or 12NUT.

DEFECT DESCRIPTION

This emissions recall applies to certain truck and bus models built with certain 2013 and 2014 (OBD) MaxxForce® DT engines. This recall will require recalibration of the engine ECM software. The recalibration will reduce incorrect fault codes and prevent Diesel Particulate Filter (DPF) overload. The software is applicable only to certain vehicles marked in the Service Portal℠ with Voluntary Emissions Recall 14512.

MODELS INVOLVED

This Voluntary Emissions Recall involves certain DuraStar® and WorkStar® model trucks and CE C, CE S, HC C, RE C, and RE S model buses built 28 February 2013 thru 08 July 2014 with certain 2013 and 2014 (OBD) MaxxForce® DT engines with feature codes 12NUN, 12NUP, 12NUR, 12NUS, or 12NUT.

PARTS INFORMATION

There are no parts for this campaign.

© 2014 Navistar, Inc. All rights reserved. All marks are trademarks of their respective owners.

SERVICE PROCEDURE

WARNING! PARK VEHICLE ON HARD FLAT SURFACE, TURN THE ENGINE OFF, SET THE PARKING BRAKE AND INSTALL WHEEL CHOCKS TO PREVENT THE VEHICLE FROM MOVING IN BOTH DIRECTIONS. FAILURE TO COMPLY MAY RESULT IN PROPERTY DAMAGE, PERSONAL INJURY, AND / OR DEATH.

WARNING! ALWAYS WEAR SAFE EYE PROTECTION WHEN PERFORMING VEHICLE MAINTENANCE. FAILURE TO COMPLY MAY RESULT IN PERSONAL INJURY AND / OR DEATH.

1. Bring vehicle into shop and park on flat surface.

2. Shift transmission to Park or Neutral and set parking brakes.

3. Install wheel chocks.

4. Verify that Engine Control Module (ECM) has latest software by referring to vehicle calibration scorecard in Service Portal℠ system.

    a. If calibration scorecard indicates that calibration is not current, engine must be reprogrammed to raise calibration to latest level. Proceed to Step 5.

    b. If calibration scorecard indicates calibration is current, engine does not need to be reprogrammed.

        i. Dealers and customers operating in California must proceed to Step 7.

        ii. No further action is required for dealers and customers operating outside California. Proceed to Step 8.

NOTE: If AutoUpgrade functionality is not available, use NETS.

NOTE: If vehicle you are working on has custom programmable parameters, and you are using NETS, and programming as a blank module, Save a ServiceMaxx™ template of all parameters before programming so custom programmable parameters can be reset after programing.

5. Program ECM using NETS or AutoUpgrade.

© 2014 Navistar, Inc. All rights reserved. All marks are trademarks of their respective owners.

NOTE: For instructions, refer to IK2600010 – NETS Programming and Troubleshooting Guide. Use Update to Latest Calibration programming option, or IK2600082 – Auto Upgrade Programming Instructions.

These articles contain general information about each reprogramming method and software, with links to specific instructions.

6. If assistance is needed, contact Vehicle Programming by creating an iKNow case file or calling 1-800-336-4500, options 3, 1, 1.

Additional Requirements for Dealers and Customers Operating in California

NOTE: The following step is required only for dealers and customers operating in the state of California.

7. After completing this recall, dealer must fill out salmon-colored Proof of Correction certificate and provide a copy to customer.

    a. Use either Figure 1 (certificate to color print on white paper) or Figure 2 (certificate to print on salmon-colored paper) to print DMV certificates.

8. Remove wheel chocks.

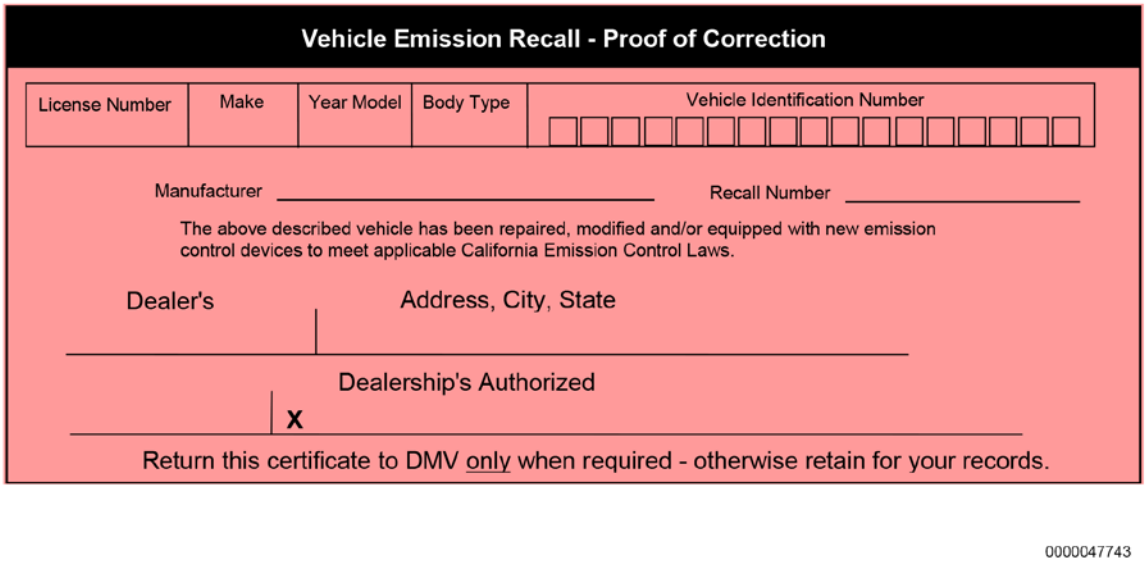

Vehicle Emission Recall - Proof of Correction

License Number	Make	Year Model	Body Type	Vehicle Identification Number

Manufacturer _____ Recall Number _____

The above described vehicle has been repaired, modified and/or equipped with new emission control devices to meet applicable California Emission Control Laws.

Dealer's Address, City, State

Dealership's Authorized

X

Return this certificate to DMV only when required - otherwise retain for your records.

0000047743

Figure 1. DMV Certificate, Salmon (Print on 8.5 x 11 inch White Paper).

© 2014 Navistar, Inc. All rights reserved. All marks are trademarks of their respective owners.

Vehicle Emission Recall - Proof of Correction

License Number	Make	Year Model	Body Type	Vehicle Identification Number

Manufacturer _____ Recall Number _____

The above described vehicle has been repaired, modified and/or equipped with new emission control devices to meet applicable California Emission Control Laws.

Dealer's Address, City, State

Dealership's Authorized

X

Return this certificate to DMV only when required - otherwise retain for your records.

0000047729

Figure 2. DMV Certificate, White (Print on 8.5 x 11 inch Salmon Paper).

END OF SERVICE PROCEDURE

LABOR INFORMATION

Operation Number	Description	Time
A40-14512-1	Recalibrate ECM	0.4 hr

© 2014 Navistar, Inc. All rights reserved. All marks are trademarks of their respective owners.

CAMPAIGN IDENTIFICATION LABEL

Each vehicle corrected in accordance with this campaign must be marked with a CTS-1075 Campaign Identification Label.

Complete the label and attach on a clean surface next to the vehicle identification number (VIN) plate.

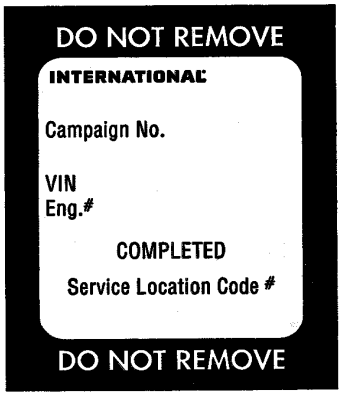

ADMINISTRATIVE / DEALER RESPONSIBILITIES

WARRANTY CLAIMS

Warranty claim expense is to be charged to Warranty. Claims are to be submitted in the normal manner, making reference to Safety Recall 14512.

It is important that the coding be completed properly to assist in processing the warranty claim. Complete instructions will be found in the Warranty Policy Manual, Section 7.1.8.

As with all claim submissions, items acquired locally must be submitted in the "Other Charges" tab. The cost of any bulk items (such as a bag of cable tie straps, roll of wire, a barrel of oil, or a tube of silicone) should be prorated for the cost of the individual pieces / amount used during each repair.

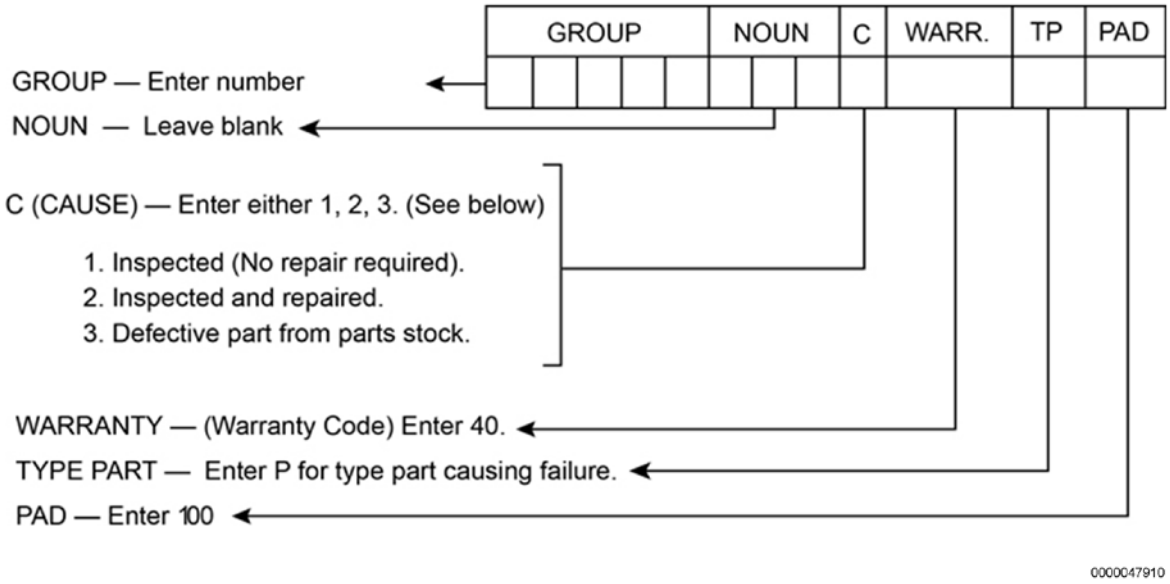

© 2014 Navistar, Inc. All rights reserved. All marks are trademarks of their respective owners.

UNITED STATES AND POSSESSIONS

The National Traffic and Motor Vehicle Safety Act, as amended, provides that each vehicle that is subject to a vehicle recall campaign must be adequately repaired within a reasonable time after the owner has tendered it for repair. A failure to adequately repair within 60 days after a tender of a vehicle is prima facie evidence of failure to repair within a reasonable time. If the condition is not adequately repaired within 60 days, the owner may be entitled to replacement with an identical or reasonable equivalent vehicle at no charge, or to a refund of the purchase price less a reasonable allowance for depreciation.

Dealers must correct all vehicles subject to this campaign at no charge to the owner, regardless of mileage, age of vehicle, or ownership, from this time forward.

Dealers should proceed immediately to make necessary correction to units in inventory. All inventory vehicles subject to this recall campaign must be corrected prior to sale, transfer or delivery. If vehicles have been sold or transferred and you are in receipt of Customer Notification Letters and Authorization for Recall Service cards for those vehicles, the transfer location or customer must be notified immediately from your dealer location.

Dealers must make every effort to promptly schedule an appointment with each owner to repair his or her vehicle as soon as possible. However, consistent with the customer notification, dealers are expected to complete the repairs on the mutually agreed upon service date.

Dealers involved in the recall process will be furnished a listing of owner names and addresses to enable them to follow up with owners and have the vehicles corrected. Use of this listing must be limited to this campaign because the list may contain information obtained from state motor vehicle registration records, and the use of such motor vehicle registration data for purposes other than this campaign is a violation of law in several states.

CANADA

Dealers must correct all vehicles subject to this campaign at no charge to the owner, regardless of mileage, age of vehicle, or ownership, from this time forward.

Dealers should proceed immediately to make necessary correction to units in inventory. All inventory vehicles subject to this recall campaign must be corrected prior to sale, transfer or delivery. If vehicles have been sold or transferred and you are in receipt of Customer Notification Letters and Authorization for Recall Service cards for those vehicles, the transfer location or customer must be notified immediately from your dealer location.

© 2014 Navistar, Inc. All rights reserved. All marks are trademarks of their respective owners.

Dealers must make every effort to promptly schedule an appointment with each owner to repair his or her vehicle as soon as possible. However, consistent with the customer notification, dealers are expected to complete the repairs on the mutually agreed upon service date.

Dealers involved in the recall process will be furnished a listing of owner names and addresses to enable them to follow up with owners and have the vehicles corrected. Use of this listing must be limited to this campaign because the list may contain information obtained from state motor vehicle registration records, and the use of such motor vehicle registration data for purposes other than this campaign is a violation of law in several states.

EXPORT

Export Distributors should proceed immediately to make necessary correction to units in inventory. All inventory vehicles subject to this recall campaign must be corrected prior to sale, transfer or delivery. If vehicles have been sold or transferred and you are in receipt of Customer Notification Letters and Authorization for Recall Service cards for those vehicles, the transfer location or customer must be notified immediately from your distributor location.

Export Distributors are to submit warranty claims in the usual manner making reference to this recall number.

Export Distributors are expected to provide full cooperation and follow-up with respect to this important subject matter. If you have any questions or need further assistance, please contact the Regional Service Manager at your regional office.

NAVISTAR, INC.

© 2014 Navistar, Inc. All rights reserved. All marks are trademarks of their respective owners.

AGENDA

Special Field Notification

NAVISTAR®

SFN–10–75RB

10–75RB

Date: September, 2011

Subject File: GENERAL

Subject: Service Support for CE and HC bus with Eaton Hybrid feature code (10HEV)

Model: CE Bus

Model: HC Bus

Unit Code: 10HEV

DESCRIPTION

This SFN applies to CE and HC buses built with the Eaton hybrid feature code (10HEV).

WARNING: The hybrid drive system utilizes potentially dangerous high voltages. Only trained technicians should service this vehicle. Failure to follow this warning could result in property damage, personal injury or death.

WARNING: Caution should be taken when working with high voltage equipment (Reference TSI 06-08-05 and TSI 08-08-01). Failure to follow these TSIs could result in property damage, personal injury or death.

The following service and support information pertains to the 10HEV hybrid feature.

- **I. Operator, Service, and Diagnostic Literature**
- **II. Service Tools**
- **III. Pre-Delivery Inspection (PDI)**
- **IV. Standard Repair Time (SRT)**
- **V. Warranty**
- **VI. Diagnostic Software**
- **VII. Dealer Education and Development**

© 2014 Navistar, Inc. All rights reserved. All marks are trademarks of their respective owners.

DESCRIPTION (CONT.)

- **VIII. Service Parts**
- **IX. Technical Support**

I. Operator, Service, and Diagnostic Literature

The following publications are available:

Table 1.

Publication	Link
Eaton Hybrid Publications (Operator):	
Hybrid Transmissions Driver Instructions	TRDR1000
Eaton Hybrid Publications (Service and Diagnostic):	
Hybrid Transmission Troubleshooting Guide	TRTS1000
Enhanced Hybrid Transmission Troubleshooting Guide	TRTS2000
Hybrid Transmission Service Manual	TRSM1000
Enhanced Hybrid Transmission Service Manual	TRSM2000
Hybrid Electric High-Voltage Service Shutdown Procedure Video	309099
Hazmat Shipping Requirements (U.S. DOT) – Med. Duty Hybrid Batteries	TAIB0817
Eaton Hybrid Publications (Emergency Responder):	
Eaton Hybrid Transmissions Emergency Response Guide	TRDR1100
Hybrid First Responder Presentation	TRFR1100
Navistar Eaton Hybrid Bus Publications (Operator):	
HC Series Supplemental Operator's Manual – Eaton Hybrid	3863172R1
Navistar Eaton Hybrid Bus Publications (Service & Diagnostic):	
Eaton Hybrid System Service Manual – HC Bus	S10025
High Voltage Pre-Service Checklist	TSI 08-08-01
High Voltage Circuits	TSI 06-08-05
Eaton Hybrid Lockout Plate	SFN 08-36
High Voltage Kit (ZTSE-5017)	SFN 07-68
HEV Battery Shipping and Receiving	SFN 09-05
Navistar Electrical Circuit Diagrams:	
BE, CE Hybrid Bus Electrical Circuit Diagrams	S08364

II. Service Tools

The following essential service tools have been identified to support feature code 10HEV:

- ZTSE 5017 - High Voltage Kit (SFN 07-68)

DESCRIPTION (CONT.)

- NAVCoM or NavLink (SFN 08-80) (may be used in place of the Nexiq USB-Link, J-48624 in Eaton's essential tool list)
- Lockout Plate J48506 (SFN 08-36)
- ZTSE 4357 - Fluke Multimeter (may be used in place of the Fluke DMM, J-46708 in Eaton's essential tool list)

International Truck dealers received ZTSE 5017 as an essential tool.

IC bus only dealers that either sell or service a hybrid bus and do not already have the ZTSE 5017 kit *MUST order ZTSE 5017 (will NOT be direct shipped)*. See section VII, Dealer Education and Development below for more information.

Additionally, Eaton has a list of recommended tools for hybrid service. These tools are listed in the appendix section of both the Hybrid Transmission Service Manual (TRSM1000) and Enhanced Hybrid Transmission Service Manual (TRSM2000).

NOTE:

- High Voltage Kit (ZTSE-5017) includes the components in Eaton's Basic PPE tool list.
- The NAVCoM cable listed above may be used in place of the Nexiq USB-Link Communication Adapter (J-48624) in Eaton's essential tool list.
- The Fluke Multimeter (ZTSE-4357) sent as essential tools to Navistar Truck and Bus dealers may be used in place of the Fluke Digital Multimeter (J-46708) in Eaton's essential tool list.

III. Pre-Delivery Inspection (PDI)

CE bus with 10HEV feature – S00141

HC bus with 10HEV feature – S00143

IV. Standard Repair Time (SRT)

Any warranty work performed should use the appropriate SRT for that specific repair operation as listed in the SRT database.

*Any repair operation not listed in the SRT database should utilize **Actual reasonable** T-Times for the repair operation.

Table 2.

Publication	Link
SRT Homepage	SRTHome.aspx

V. Warranty

For Eaton Hybrid system warranty, refer to: www.roadranger.com/

Warranty coverage follows the standard published warranty and be administered through International's existing warranty process.

DESCRIPTION (CONT.)

Please refer to the Warranty Policy Letter 07-004G for submitting warranty pertaining to Eaton Hybrid components.

Any warranty should be coded using the appropriate noun codes under the hybrid group codes (listed below) from the warranty coding manual (CTS-1025).

Hybrid warranty group codes:

- 08004 - Hybrid/Electric Vehicle
- 09003 - Hybrid/Electric Drive Cooling

Vehicle warranty information is available on the warranty matrix:

Table 3.

Publication	Link
Warranty Policy Manual	CTS-1100
Warranty Form Matrix	Warranty Form Matrix

VI. Diagnostic Software

Feature 10HEV (Eaton hybrid system) requires the use of Eaton's ServiceRanger software for diagnostics. To obtain a copy, please call 1-800-336-4500 then option 2, and then option 1.

VII. Dealer Education and Development

Below is a listing of hybrid specific training available from Eaton and Navistar:

***NOTE:** Technicians MUST have received the minimum 2 day Hybrid training (course: Hybrid Electric Transmission Service Training) through the Roadranger Academy (reference TAIB-0825).

Table 4.

Training	Link
Hybrid Training offered by Eaton:	
Eaton Hybrid Service Training Requirements - Technicians	TAIB-0825
*Hybrid Electric Transmission Service Training (2-day Hands on course)	Roadranger Academy
Hybrid Electric Power System Driver Training Video (**CH 1-7 below**)	RRSD0004
CH 1 - Hybrid Electric Power System Driving	RRSD0004
CH 2 - Hybrid Electric Power System Basic Troubleshooting	RRSD0004
CH 3 - Hybrid Electric Power System Improving Fuel Economy	RRSD0004
CH 4 - Hybrid Electric Power System Optional Equipment	RRSD0004
CH 5 - Hybrid Electric Power System Frequently Asked Questions	RRSD0004
CH 6 - Hybrid Electric Power System Preventative Maintenance	RRSD0004
CH 7 - Hybrid Electric Power System First Responder Information	RRSD0004

DESCRIPTION (CONT.)

Training	Link
Hybrid Training offered by Navistar:	
Service Training:	
Eaton Hybrid Interactive Training	LMS
Operating Eaton Hybrid Powered Vehicles	LMS
Sales Training:	
Hybrid Electric Vehicle Sales Training	LMS
Hybrid Vehicle In-Service Delivery Training	LMS

VIII. Service Parts

Service parts for the hybrid system are available from Eaton. Eaton's technical support must be called prior to any hybrid component replacement.

Eaton Technical Support: 1-800-826-4357

IX. Technical Support

If needed, Tech Services may be contacted for technical support.

iKNow should be checked before contacting the Tech Service as information is added to the knowledge base regularly.

AGEND

Product Awareness Bulletin

Ed Swaim 10/19/2012 #044

Corrosion Protection

Saf-T-Liner C2

TBB is pleased to introduce three new corrosion protection coatings to help protect against road debris, de-icing chemicals and excessive wear. These new coatings "TuffCoat", "UnderGuard" and "EdgeCover" can be ordered individually, or in any combination to address your customers needs.

TuffCoat - Stepwell D5128-00-000:

- **Durable, high-performance coating on the stepwell.**
- **Guards against corrosion, abrasion, impact and weather.**
- **Resistant to de-icing chemicals.**
- **Provides flexible textured surface.**
- **Dampens noise and vibrations.**

Undercoating - UnderGuard D5053-02-XXX:

- High performance undercoating applied to the underside of the body.
- Guards against corrosion, abrasion, impact and weather.
- Resistant to de-icing chemicals.
- Durable, self healing formula.
- Used in commercial bus and automobile industries.

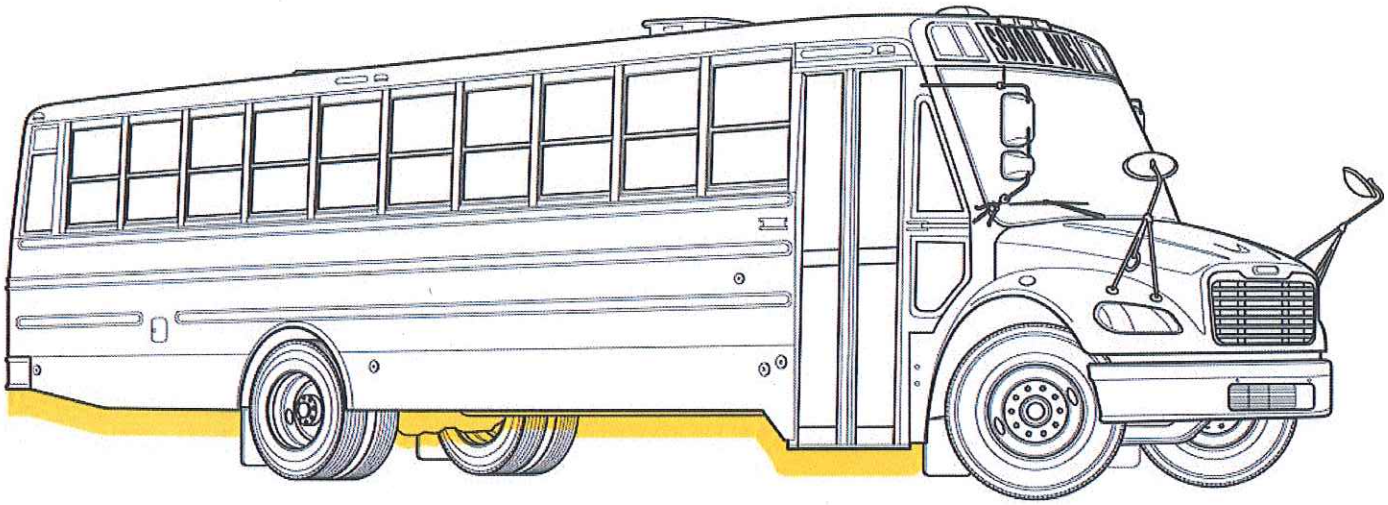

EdgeCover - Exterior Body D5138-00-000:

- Clear protective coating applied on top of the standard paint.
- Applied to various locations:
  - Perimeters of doors
  - Wheelhouse fenderettes
  - Lower skirt seams
  - Door hinges
- Guards against corrosion and weather.
- Resistant to de-icing chemicals.
- Durable, self healing formula.
- Used in commercial bus and automobile industries.

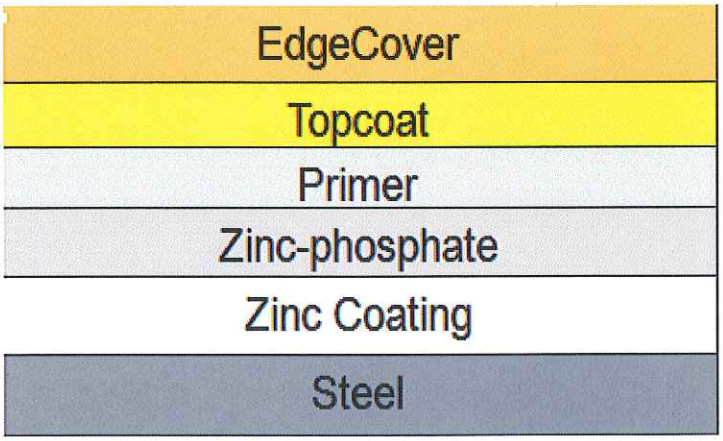

AGEND

Product Awareness Bulletin

Jed Routh 10/16/2012 #042

Memorandum

To: All Dealers

From: Jed Routh

Subject: 2013 EPA Engines

Date: October 16, 2012

We will soon be releasing 2013 engines for EFX and HDX. Cross-over option listings are attached.

For the Saf-T-Liner EFX, there are very few changes that will affect the driver or technician. Like all 2013 engine installations, there will be additional sensors that will detect performance of the emissions systems, but all other changes will be minor in nature.

As discussed at our 2012 regional meetings, the Saf-T-Liner HDX will experience some significant changes. The radiator and fan drive will be relocated to the street (left) side of the bus with our fan drive upgraded to a mechanical system, replacing the current Parker hydraulic system. In addition, a new service center will be included in the upgrade which will result in improve service access for most routine maintenance procedures . On the following pages, you'll find specifications for the cooling system, a features and benefits listing of the service center, a list of components that will undergo significant changes supported with a cross over list of options.

System	2010	2013	Notes
Fan Drive	Hydraulic –Parker	Mechanical – Linnig shaft with engine mounted pulleys and viscous clutch	Same system used on all FCCC shuttle buses and motorhomes with side mounted radiators. Three years history and 1800+ units in service

Air Cleaner	Donaldson Cyclopac	Donaldson Powercore	99.9% ISO 5011 Dust Removal Efficiency >10 gram/CFM dust holding capacity Optional pre-filter and secondary filter available
Radiator	Titan X	Titan X	No changes in Radiator itself – Cooling package moves to street side
Service Center	None	Standard service center	Easy access to pre-trip and monthly service items

Engine Air Cleaner

- Donaldson Powercore Air Cleaner
  - 99.9% ISO 5011 Dust Removal Efficiency
  - >10 gram/CFM dust holding capacity
- Under Development
  - Optional Safety Filter – protects engine from dust and debris at filter change
  - Option Dual Stage Inlet – separates dust prior to main air filter

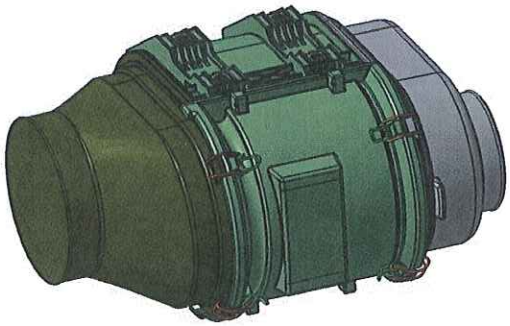

HDX Fan Drive

1. Engine mounted pulleys
2. Shaft driven gear box
3. Viscous clutch

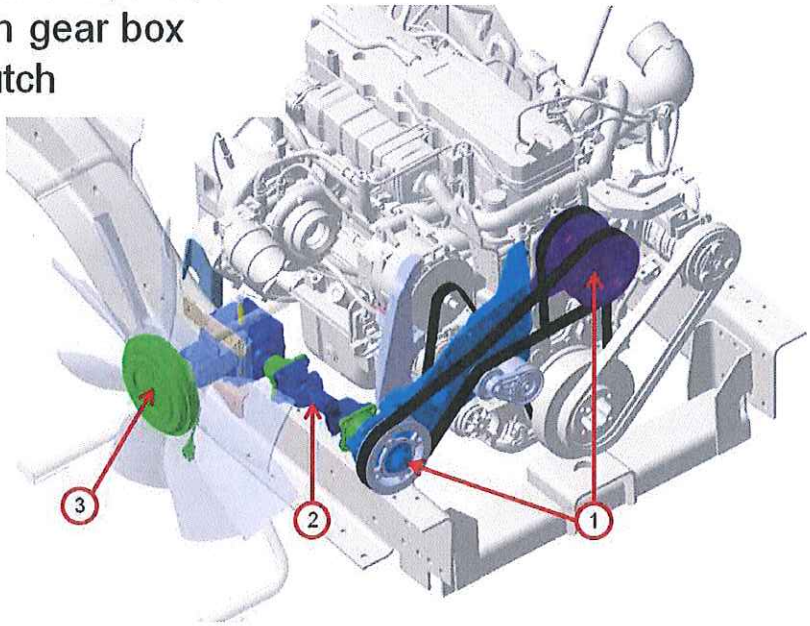

System

Source: Department

2

HDX Serviceability

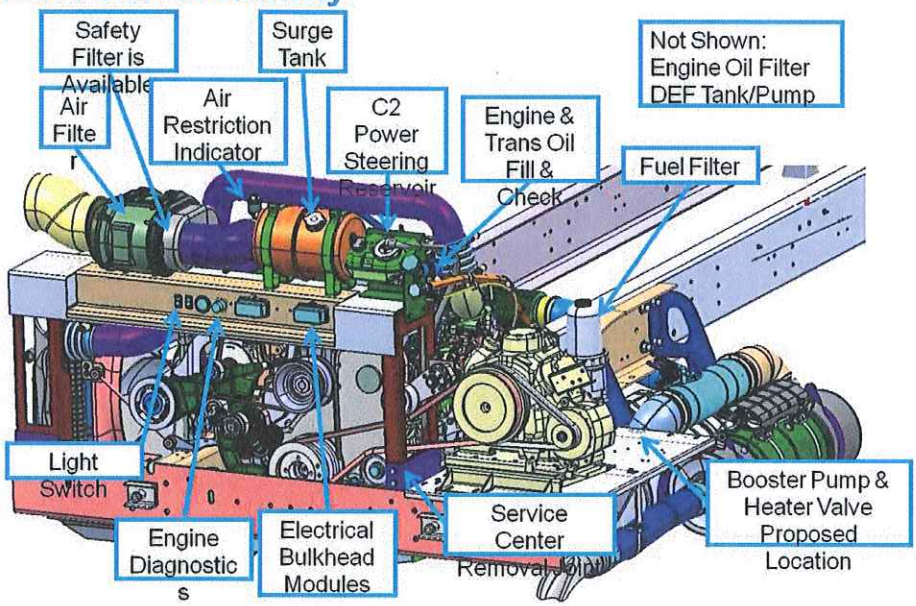

2010 options	2013 options		Model
	Engines		
	ISB		
C241011220	C241013220	CUMMINS ISB-220 ENGINE (HDX) 2013 EPA	HDX
C241011240	C241013240	CUMMINS ISB-240 ENGINE (HDX) 2013 EPA	HDX
C241011250	C241013250	CUMMINS ISB-250 ENGINE (HDX)	HDX

AGENDA

Recall Campaign

Daimler Trucks North America LLC

January 2015
FL675A-C
NHTSA # 14V-760 (School Bus)
NHTSA # 14V-759 (Non-School Bus)
Transport Canada 14-549 (School Bus)

Subject: TBB Minotour Fuel Tank Straps

Models Affected: Specific Thomas Built Buses Minotour GM/Chevrolet and Ford chassis buses manufactured April 2, 2012, through October 3, 2014.

General Information

Daimler Trucks North America LLC (DTNA), on behalf of its wholly owned subsidiary, Thomas Built Buses (TBB), has decided that a defect that relates to motor vehicle safety exists on the vehicles mentioned above.

There are approximately 5,346 vehicles involved in this campaign.

On certain Minotour buses, the fasteners used to secure the fuel tank straps may have been loosened during the bus assembly process. An unsecured fuel tank strap could potentially allow the fuel tank to contact the ground and possibly leak gasoline. A gasoline leak in proximity to an ignition source may increase the risk of a fire.

The fuel tank strap bolts will be replaced.

Additional Repairs

Dealers must complete all outstanding Recall and Field Service campaigns prior to the sale or delivery of a vehicle. A Dealer will be liable for any progressive damage that results from its failure to complete campaigns before sale or delivery of a vehicle.

Owners may be liable for any progressive damage that results from failure to complete campaigns within a reasonable time after receiving notification.

Work Instructions

Please refer to the attached work instructions.

Replacement Parts

Replacement parts are now available and can be obtained by ordering from your facing Parts Distribution Center.

If our records show your dealership has ordered any vehicles involved in campaign number FL675, a list of the customers and vehicle identification numbers will be available on AccessFreightliner.com. Please refer to this list when ordering parts for this recall.

Recall Campaign

Daimler Trucks North America LLC

January 2015
FL675A-C
NHTSA # 14V-760 (School Bus)
NHTSA # 14V-759 (Non-School Bus)
Transport Canada 14-549 (School Bus)

IMPORTANT: Parts must be purchased from a GM or Ford dealer as appropriate.

Table 1 – Replacement Parts for FL675A-C

Campaign Number	Part Number	Description	Qty.
FL675A and C (GM Chassis)	11610209	Bolt For Fuel Tank Strap	2 ea
FL657B (Ford Chassis)	N803892-S439	Bolt For Fuel Tank Bracket	2 ea
	N802073-S441	Nut For Fuel Tank Bracket	2 ea

Table 1

Removed Parts

Please follow Warranty Failed Parts Tracking shipping instructions for the disposition of all removed parts.

Labor Allowance

Table 2 – Labor Allowance

Campaign Number	Procedure	Time Allowed (Hours)	SRT Code	Corrective Action
FL675A – School Buses (5,259 units)	Replace fuel tank strap or bracket bolts	0.8	174-6350D	12 – Repair Recall/Campaign
FL675B – School Buses (62 units)				
FL675C – Non-School Buses (25 units)				

Table 2

Claims for Credit

You will be reimbursed for your parts, labor, and handling by submitting your claim through the Warranty system within 30 days of completing this campaign. Please reference the following information in OWL:

- Claim Type is **Recall Campaign**.
- In the Campaign field, enter the campaign number and appropriate group (**FL675-A, FL675-B, or FL657-C).**
- In the Primary Failed Part field, enter **TBB 170727**.
- In the Parts section, enter the appropriate part number(s) as shown in the Replacement Parts Table.
- In the Labor section, enter the appropriate SRT from the Labor Allowance Table. Administrative time will be included automatically as SRT 939-6010A for 0.3 hours.
- The VMRS Component Code is **044-001-053** and the Cause Code is **A1 - Campaign**.

Recall Campaign

Daimler Trucks North America LLC

January 2015
FL675A-C
NHTSA # 14V-760 (School Bus)
NHTSA # 14V-759 (Non-School Bus)
Transport Canada 14-549 (School Bus)

- **U.S. and Canada – Reimbursement for Prior Repairs**. When a customer asks about reimbursement, please do the following:
    - Accept the documentation of the previous repair.
    - Make a brief check of the customer's paperwork to see if the repair may be eligible for reimbursement.
    - Submit a Recall Pre-Approval request for a decision and authorized amount.
    - Submit a "based on" claim for the approved pre-approval.
    - Attach the documentation to the pre-approval request.
    - When your claim is paid, reimburse the customer the appropriate amount.

IMPORTANT: OWL must be viewed prior to performing the recall to ensure the vehicle is involved and the campaign has not been previously completed. Also, check for a completion sticker prior to beginning work.

Contact the Warranty Campaigns Department at (336) 889-4871, from 8:00 a.m. to 5:00 p.m. Eastern Time, Monday through Friday, via Web inquiry at AccessFreightliner.com / My Tickets and Submit an Inquiry, if you have any questions or need additional information.

To return excess kit inventory related to this campaign, U.S. dealers must submit a Parts Authorization Return (PAR) to the Memphis PDC. Canadian dealers must submit a PAR to their facing PDC. All kits must be in resalable condition. PAR requests must include the original purchase invoice number.

The letter notifying U.S. and Canadian vehicle owners is included for your reference.

Please note that the National Traffic and Motor Vehicle Safety Act, as amended (Title 49, United States Code, Chapter 301), requires the owner's vehicle(s) be corrected within a reasonable time after parts are available to you. The Act states that failure to repair a vehicle within 60 days after tender for repair shall be prima facie evidence of an unreasonable time. However, circumstances of a particular situation may reduce the 60 day period. Failure to repair a vehicle within a reasonable time can result in either the obligation to (a) replace the vehicle with an identical or reasonably equivalent vehicle, without charge, or (b) refund the purchase price in full, less a reasonable allowance for depreciation. The Act further prohibits dealers from selling a vehicle unless all outstanding recalls are performed. Any lessor is required to send a copy of the recall notification to the lessee within 10 days. Any subsequent stage manufacturer is required to forward this notice to its distributors and retail outlets within five working days.

Recall Campaign

Daimler Trucks North America LLC

January 2015
FL675A-C
NHTSA # 14V-760 (School Bus)
NHTSA # 14V-759 (Non-School Bus)
Transport Canada 14-549 (School Bus)

Copy of Notice to Owners

Subject: TBB Minotour Fuel Tank Straps

This notice is sent to you in accordance with the requirements of the National Traffic and Motor Vehicle Safety Act. This notice is sent to you in accordance with the Canadian Motor Vehicle Safety Act.

Daimler Trucks North America LLC, on behalf of its wholly owned subsidiary, Thomas Built Buses, has decided that a defect which relates to motor vehicle safety exists on specific Thomas Built Buses Minotour GM/Chevrolet and Ford chassis buses manufactured April 2, 2012, through October 3, 2014.

On certain Minotour buses, the fasteners used to secure the fuel tank straps may have been loosened during the bus assembly process. An unsecured fuel tank strap could potentially allow the fuel tank to contact the ground and possibly leak gasoline. A gasoline leak in proximity to an ignition source may increase the risk of a fire.

The fuel tank strap bolts will be replaced.

To arrange for repairs, you should contact your local Thomas Built Buses dealer immediately. Thomas will remedy this defect without charge. The repair should take approximately an hour depending on your vehicle, and will be performed at no charge to you.

You may be liable for any progressive damage that results from your failure to complete the Recall within a reasonable time after receiving notification.

If you do not own the vehicle that corresponds to the identification number(s) which appears on the Recall Notification, please return the notification to the Warranty Department with any information you can furnish that will assist us in locating the present owner. If you have leased this vehicle, Federal law requires that you forward this notice to the lessee within 10 days.

If you have paid to have this recall condition corrected prior to this notice, you may be eligible to receive reimbursement. For further information, please contact the Warranty Department at (336) 889-4871, 8 a.m. to 5 p.m. Eastern Time Monday through Friday. To find a dealer in your area please go to www.thomasbus.com.

If you have any questions about this recall, please contact the Warranty Department at (336) 889-4871, 8:00 a.m. to 5:00 p.m. Eastern Time, Monday through Friday. If you are not able to have the defect remedied without charge and within a reasonable time, you may wish to submit a complaint to the Administrator, National Highway Traffic Safety Administration, 1200 New Jersey Avenue, SE., Washington, DC 20590; or call the Vehicle Safety Hotline at (888) 327-4236 (TTY: 800-424-9153); or to http://www.safercar.gov. In Canada, you may contact Transport Canada-road safety, 80 rue Noel, Gatineau, Quebec J8Z 0A1 or call 1-800-333-0510.

We regret any inconvenience this action may cause but feel certain you understand our interest in motor vehicle safety.

THOMAS BUILT BUSES WARRANTY DEPARTMENT
Enclosure

Recall Campaign

Daimler Trucks
North America LLC

January 2015
FL675A-C
NHTSA # 14V-760 (School Bus)
NHTSA # 14V-759 (Non-School Bus)
Transport Canada 14-549 (School Bus)

Work Instructions

Subject: TBB Minotour Fuel Tank Straps

Models Affected: Specific Thomas Built Buses Minotour GM/Chevrolet and Ford chassis buses manufactured April 2, 2012, through October 3, 2014.

IMPORTANT: Read entire procedure before beginning.

⚠ DANGER

- **Do not smoke, carry lighted tobacco, or have an open flame of any type when working or near any fuel-related component. Highly flammable mixtures are always present and may be ignited. Failure to follow these instructions may result in serious personal injury.**
- **Do not carry personal electronic devices such as cell phones, pagers or audio equipment of any type when working on or near any fuel-related component. Highly flammable mixtures are always present and may be ignited. Failure to follow these instructions may result in serious personal injury.**
- **When handling fuel, always observe fuel handling precautions and be prepared in the event of fuel spillage. Spilled fuel may be ignited by hot vehicle components or other ignition sources. Failure to follow these instructions may result in serious personal injury.**
- **Before working on or disconnecting any of the fuel tubes or fuel system components, relieve the fuel system pressure to prevent accidental spraying of fuel. Fuel in the fuel system remains under high pressure, even when the engine is not running. Failure to follow this instruction may result in serious personal injury.**

Fuel Tank Strap Bolt Replacement

GM/Chevrolet Procedure

1) Shut down the engine, chock wheels, set parking brake, make sure shifter is in Park or Neutral, and the ignition switch is off.

IMPORTANT: Both bolts must be replaced with GM parts (no aftermarket parts).

2) Remove the fuel cap.

NOTE: The existing bolts in the straps holding the fuel tank must be discarded and replaced with new bolts from the manufacturer. See **Figure 1** for how the tank is mounted.

3) Raise the bus enough to be able to access the bolts and fuel tank**.** A lift will be fine as long as you have a support for the fuel tank tall enough to support the tank while working on it.

4) Bring the support/jack under tank and center to support the weight.

5) While it is supported, remove the first bolt that holds one of the straps. **Do not remove both straps at the same time.** Be careful of the strap as it will drop down.
6) Push the strap back up into place. Insert a new bolt (GM P/N 11610209) and tighten to 15 ft. lbs.
7) Repeat with second bolt/strap, replacing the bolt with a new factory bolt.
8) Verify the tank is mounted securely and there are no kinks or pinches in the fuel lines or electrical harnesses. Once verified remove the support and return the bus to the ground.

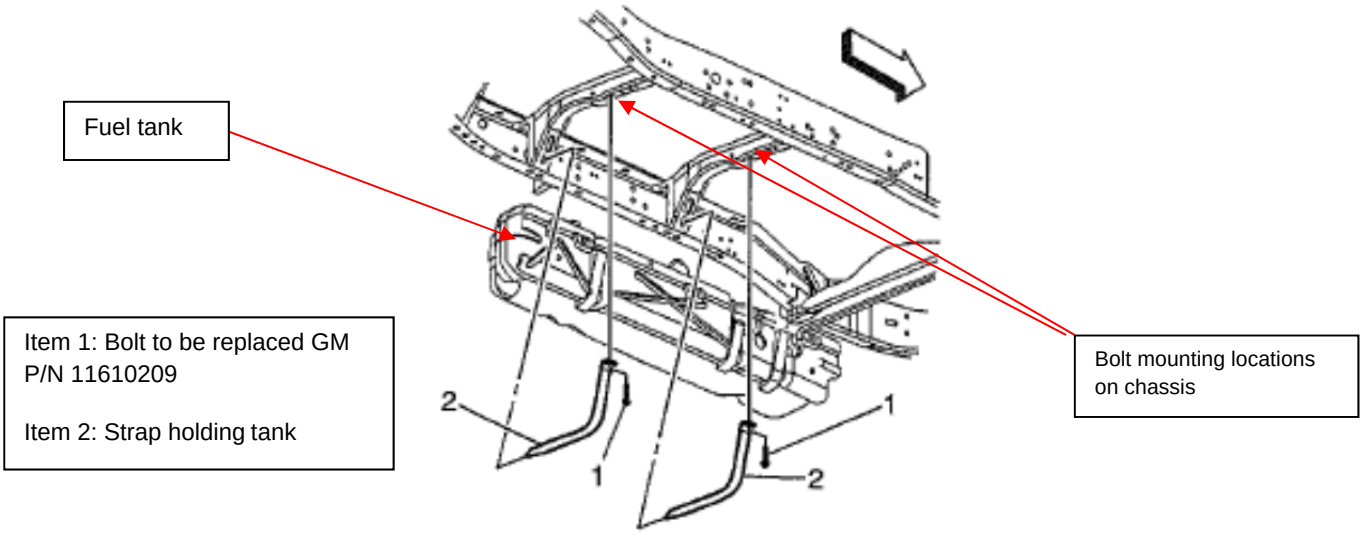

Figure 1, GM Fuel Tank Bolt Locations

Ford Procedure

1) Shut down the engine, chock wheels, set parking brake, make sure shifter is in Park or Neutral, and the ignition switch is off.

IMPORTANT: Both bolts/nuts must be replaced with Ford parts (no aftermarket parts).

2) Remove fuel cap.
3) Raise bus enough to be able to access the bolts and fuel tank. A lift will be fine as long as you have a support for the fuel tank tall enough to support the tank while working on it.
4) Bring the support/jack under tank and center to support the weight.
5) While it is supported, remove the first bolt and nut that holds one of the brackets. **Do not remove both brackets at the same time.** Be careful of the bracket as it will drop down.
6) Push the bracket back to the original location and insert a bolt (Ford P/N N803892-S439) and nut (Ford P/N N802073-S441) and tighten to 18 ft-lbs.
7) Repeat with the second bolt/bracket.
8) Verify the tank is mounted securely and there are no kinks or pinches in the fuel lines or electrical harnesses. Once verified remove the support and return the bus to the ground.

AGENDA

Memorandum

To: **All Thomas Dealers**

From: **Greg Elmore**

Subject: **FL675A-C NHTSA# 14V-760 - Mino Fuel Tank Straps**

Date: **February 20, 2015**

The recent release of our recall for Minotour fuel tank straps has experienced a part supply challenge from GM. We are working with GM's distribution channels to provide parts through their distribution network and to accelerate the replenishment of inventory. Last week were informed that inventory will be available to their dealer network the week of February 23rd.

Please review the units identified in the recall within your AOR to determine your inventory required to complete the recall. We anticipate GM will make inventory available shortly, so work through your local GM dealer to secure your inventory requirements for performing the recall

.

If you have any questions contact your District Service Manager.

Sincerely,
Greg Elmore

AGENDA

BLUE BIRD

R14XC

DATE: **APRIL 24, 2014**

TO: **U.S. DEALERS**

SUBJECT: **RECALL R14XC FMVSS 221 JOINT STRENGTH NONCOMPLIANCE-REAR WHEELHOUSE TO BODY GUSSET PANEL JOINTS**

This notice is sent to you in accordance with the requirements of the National Traffic and Motor Vehicle Safety Act.

Blue Bird Body Company has decided that certain 2014 model year All American and Vision model school buses manufactured from January 21, 2013 through February 28, 2013 may fail to conform to the joint strength requirements of Federal Motor Vehicle Safety Standard (FMVSS) No. 221, "School Bus Body Joint Strength" at the rear wheelhouse to body gusset panel joint.

On the subject buses, the joint between the rear wheelhousing and body gusset panel may have partially separated during the manufacturing process. Buses with separation at the wheelhouse to body gusset panel joints fail to conform to the joint strength requirements of FMVSS No. 221. Bus passengers may sustain injuries in the event of a vehicle crash.

Buses with this noncompliance must be corrected immediately according to the enclosed instructions for Recall R14XC.

If our records indicate affected buses were delivered in your service area, a printout identifying affected buses is enclosed. Dealers should verify correct owners and assure that complete shipping addresses are provided for each listed vehicle.

If you have in your possession or have sold a bus that was purchased from another dealer that may be affected by this recall, please notify me at 478-822-2242.

Owners are being advised to contact their Blue Bird dealers to arrange at time to have this work performed.

Affected buses must be inspected according to Recall R14XC instructions for deformation at both the right and left rear wheelhouse to body gusset panel joints.

After inspection Dealers must request parts, if needed, from Blue Bird Recall Administration.

BLUE BIRD BODY COMPANY
P.O. Box 937 – 402 Blue Bird Blvd – Fort Valley, Georgia – (478) 825-2021

Labor time to visually inspect the outside of both left and right rear wheelhouse to body gusset panel joints for deformation is 0.1 hours (6 minutes) per bus.

Labor time to complete further inside visual inspection for deformation of any rear wheelhouse to body panel joint identified by the outside visual inspection is 0.2 hours (12 minutes) per wheelhouse to body gusset panel joint.

Labor time to correct any rear wheelhouse to body gusset panel joint deformation found is 2.5 hours per rear wheelhouse to body gusset panel joint.

Dealers may submit campaign claims in Blue Bird iWarranty.

Federal law requires that any vehicle lessor receiving this recall notice must forward a copy of this notice to the lessee within ten days.

Dealers are reminded of their responsibilities under section 154 of The National Traffic and Motor Vehicle Safety Act of 1991. Dealers are required to complete modifications on units in their inventory before delivering to the final owner. Reference Blue Bird Body Company Distributor Memo No. 42-92.

Questions regarding this recall campaign should be directed to me at (478) 822-2242.

Thank you,

Bill Coleman

Bill Coleman
Corporate Recall Administrator
Blue Bird Corporation

AGENDA

BLUE BIRD

R14XC

IMPORTANT SAFETY RECALL NOTICE
NHTSA RECALL NO. 14V-110 SCHOOL BUS

April 24, 2014

Dear Blue Bird Owner:

This important safety recall notice applies to your buses identified by both Blue Bird Body Number and Vehicle Identification Number (VIN) on the enclosed yellow cover sheet.

This notice is sent to you in accordance with the requirements of the National Traffic and Motor Vehicle Safety Act.

Blue Bird Body Company has decided that certain 2014 model year All American and Vision model school buses manufactured from January 21, 2013 through February 28, 2013 may fail to conform to the joint strength requirements of Federal Motor Vehicle Safety Standard (FMVSS) No. 221, "School Bus Body Joint Strength" at the rear wheelhouse to body gusset panel joints.

On the subject buses, the joint between the rear wheelhousing and body gusset panel may have partially separated during the manufacturing process. Buses with separation at the wheelhouse to body gusset panel joints fail to conform to the joint strength requirements of FMVSS No. 221. Bus passengers may sustain injuries in the event of a vehicle crash. Buses with this noncompliance must be corrected immediately according to the enclosed instructions for Recall R14XC.

If you no longer own the subject bus(es), please complete the appropriate section of the **pink** reply sheet and return to Blue Bird in the enclosed pink postage prepaid envelope.

You should contact your Blue Bird dealer to have this recall performed. Or, if you prefer, you may perform this recall yourself or have a qualified repair facility convenient to you perform this recall. A qualified technician should perform this recall.

Parts and labor required to complete Recall R14XC, according to the attached instructions, will be provided at no cost to you.

Affected buses must be inspected according to Recall R14XC instructions for deformation at both the right and left rear wheelhouse to body gusset panel joints. Your findings must be recorded on the attached Recall R14XC Inspection Sheet and returned to Blue Bird in one of the enclosed pink self-addressed postage paid reply envelopes or the inspection sheet may be faxed to 478-822-2467. You should retain a copy of Recall R14XC Inspection Sheet for your bus records.

BLUE BIRD BODY COMPANY
P.O. Box 937 – 402 Blue Bird Blvd – Fort Valley, Georgia – (478) 825-2021

Labor time to visually inspect the outside of both left and right rear wheelhouse to body gusset panel joints for deformation is 0.1 hours (6 minutes) per bus.

Labor time to complete further inside visual inspection for deformation of any rear wheelhouse to body panel joint identified by the outside visual inspection is 0.2 hours (12 minutes) per wheelhouse to body gusset panel joint.

Labor time to correct any rear wheelhouse to body gusset panel joint deformation found is 2.5 hours per rear wheelhouse to body gusset panel joint.

You may elect to perform this recall yourself, or have a qualified repair facility convenient to you perform this recall. Parts needed to perform Recall R14XC will be provided at "no charge" when a properly completed **Recall R14XC Inspection Sheet** is returned to Blue Bird Recall Administration.

If the modifications directed by this notification were performed on your bus prior to the receipt of this recall notification, complete and sign the recall reply sheet and attached a copy of the work order/invoice. Mail the documents in the **pink** self-addressed postage paid envelope included with the recall notification to Blue Bird for warranty consideration. Reimbursements will be made in accordance with the requirements of the National Highway Transportation Safety Act, Title 49 Code of Federal Regulations, Parts 573 and 577.

Federal law requires that any vehicle lessor receiving this recall notice must forward a copy of this notice to the lessee within ten days.

If Blue Bird Body Company should fail to or is unable to remedy this condition without charge to you, you may contact:

ADMINISTRATOR
NATIONAL HIGHWAY TRAFFIC SAFETY ADMINISTRATION
1200 NEW JERSEY AVENUE, SE
WASHINGTON, D.C. 20590

Or, you may call The National Highway Traffic Safety Administration toll free at:

1-888-327-4236 TTY 1-800-424-9153 or, go to: HTTP:/WWW.SAFERCAR.GOV

Questions regarding this recall campaign should be directed to me at (478) 822-2242.

Thank you,

Bill Coleman

Bill Coleman
Corporate Recall Administrator
BLUE BIRD BODY COMPANY

AGENDA

Recall R14XC Inspection Sheet
Rear Wheelhouse to Body Gusset Panel Joint

Write "Pass" if joint passes inspection. Write "Fail" if joint does not pass inspection. If outside inspection passes, no further inspections are required.					
Blue Bird Body Number	**Outside Inspection Right (Curb) Side Rear Wheelhouse Joint**	**Outside Inspection Left (Driver's) Side Rear Wheelhouse Joint**	**Inside Inspection Right (Curb) Side Rear Wheelhouse Joint**	**Inside Inspection Left (Driver's) Side Rear Wheelhouse Joint**	**Date Rear Wheelhouse Joints Inspected**

School or Company Name

Shipping Address

City, State, Zip

Signature

Print Name and Telephone Number

AGENDA

BLUE BIRD

Rear Wheelhousing Joint

RECALL

Models Affected: 2012-2014 Vision and All American w/standard floor and <u>without</u> optional rubber fenders.

ISSUE

Rear wheelhousing to body gusset panel joint may not comply with FMVSS 221, Joint Strength requirement.

CORRECTIVE ACTION

Inspect for deformed wheelhousing and repair as necessary to comply with FMVSS 221, Joint Strength requirement.

PROCEDURE

WARNING: Always follow all Federal, State, Local and Shop safety standards and use proper safety equipment, and thoroughly read and understand all instructions before performing these procedures.

WARNING: Before using Magnobond adhesive, review manufacturer's handling instructions and cautions included with each shipment.

Procedure 1

- Inspect underside of each rear wheelhousing for deformed panel.
- If panel is deformed (pic 1), proceed to Procedure 2.
- If panel is not deformed (pic 2), recall is complete. Return bus to service.

Picture 1

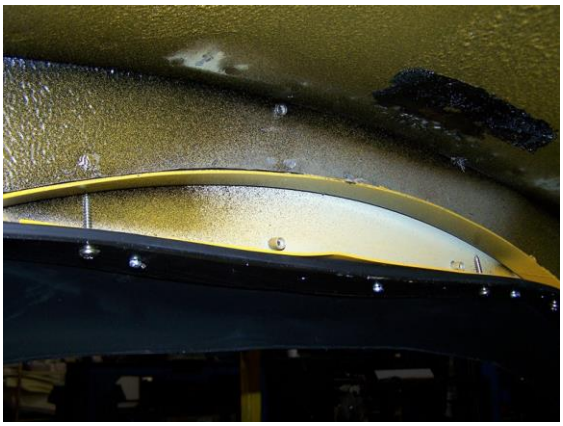

Picture 2

R14XC

RECALL CAMPAIGN

BLUE BIRD

RECALL

Procedure 2

- Remove wheelhousing cover screws and slide the wheelhousing cover towards the center of the bus.

  *NOTE: Passenger seat(s) do **not** need to be removed for this step.*

- Inspect the joint where the wheelhousing meets the gusset.
- If there is a gap present or the spot welds visibly appear to be compromised (pic 3), proceed to procedure 3.
- If there is no gap present (pic 4), replace the wheelhousing cover.
- Place the wheelhousing cover into position, seal under the lip of the cover using black sealant (Manus Bond).
- Install perimeter screws.
- Recall is complete. Return bus to service.

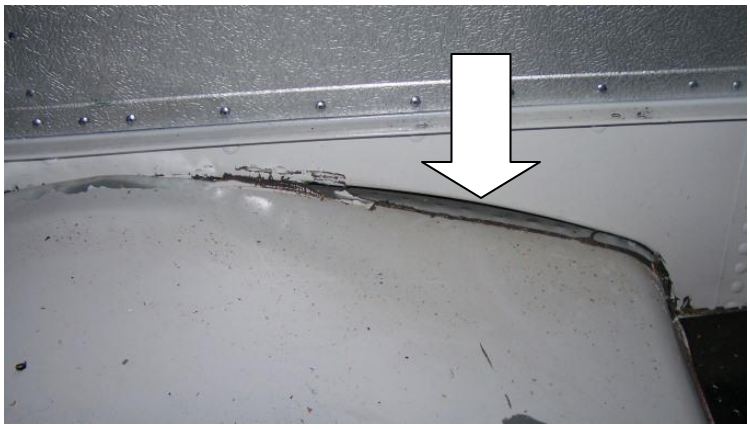

Picture 3

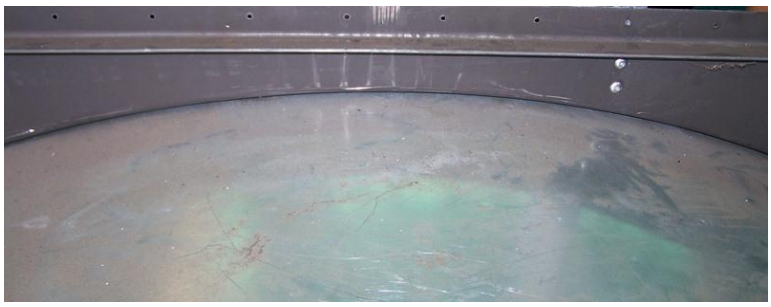

Picture 4

Procedure 3

WARNING: Secure the bus with jack stands and chock the wheels accordingly to prevent the bus from moving.

- Remove the tire(s) on the side of the affected wheelhousing.
- Remove the seat(s) over the affected wheelhousing. Discard the mounting bolts and nuts.
- Remove any loose sealant or debris from the gapped area.
- Using a wire brush, wire wheel or die grinder, remove any paint from between the wheelhousing and gusset ledge.
- Using the appropriate body hammers and/or slide hammers form the wheelhousing as required so there is little to no gap between it and the gusset edge. (pic 5)

Picture 5

Picture 6

- Beginning at the radius where the gap is, measure 1¼” from the side panel and drill a hole (17/64”) to install a self-threading fastener (02000198) to pull the wheel housing up to the gusset and close the gap. (pic 6)
- Continue to drill and install a fastener every 7 inches the entire radius of the wheel housing.
- Once all fasteners are installed, verify there is no gap in the joint.

NOTE: Continue working the material with the body hammers and installing fastener until there is no gap present.

BLUE BIRD

RECALL

Prepare the surface for Magnobond adhesive.

WARNING: Before using Magnobond adhesive, review manufacturer's handling instructions and cautions included with each shipment.

NOTE: Be sure there is no paint, dirt or silicone within the area the adhesive is to be applied

- Remove all self-threading fasteners that were previously installed.
- Apply a ¼" bead of Magnobond adhesive between the wheelhousing and gusset edge. (pic 7)

  NOTE: It may be necessary to use a pry bar and block of wood to apply downward pressure to the top of the wheelhousing to allow access to apply the adhesive.
- Re-Install the self-threading fasteners working towards the center of the wheelhousing.
- Centered between each fastener, drill a 17/64" hole and install a ¼" repair rivet (01854397).

Picture 7

Picture 8

- There should be a fastener at least every 3.5 inches. (pic 8)
- Spray undercoating on the exposed rivets and fastener heads.
- Allow ample time for the Magnobond to dry to the touch, normally 1-6 hours.
- Install wheelhousing cover; Place the wheelhousing cover into position, seal under the lip of the cover using black sealant (Manus Bond).

BLUE BIRD

RECALL

- Install seat using new bolts and nuts. Reference Seat Parts List for torque specifications.
- Recall is complete. Place bus back into service.

Repair Parts List *Contact Blue Bird Recall Administration at 478-822-2242 to obtain repair parts if needed.*

Quantity	Part Number	Description
14	01854397	Rivet, Blind, .25 Dia, .38 grip
14	02000198	SCREW,5-16-18 X 1,F,HEX HD,YEL ZN DICH
AS NEEDED	NPN	17/64 DRILL BIT, OBTAIN LOCALLY
AS NEEDED	NPN	Undercoating, OBTAIN LOCALLY
1	10016413	Nozzle, Joint, Mixing, Static 1
1	10016411	Adhesive, Joint, Magnobond 200ML/200ML ***
1	10016412	Gun, Dispensing, 2 Barrel 1
1	10028090	Sealant, Black, Manus Bond

One tube set will do multiple buses

Seat Parts List *Contact Blue Bird Recall Administration at 478-822-2242 to obtain repair parts if needed.*

Seat Ledge Mounting Fasteners			
Part Number	**Description**	**Quantity**	**Torque ft-lb**
00854406	Capscrew, 5/16-18 x 1, GR8	3	
00829390	Nut, 5/16-18, SER Washer	3	12-13
10021595	Capscrew, 3/8-16 x 2, GR8	1	
00543934	Nut, 3/8-16, SER Washer	1	13-15

Floor Mounting Fasteners			
Part Number	**Description**	**Quantity**	**Torque ft-lb**
10021595	Capscrew, 3/8-16 x 2, GR8	6	
00543934	Nut, 3/8-16, SER Washer	6	18-20

NOTE: Re-torque the seat bolts after one month or 1,000 miles of service.

AGENDA

BLUE BIRD

R14XD

IMPORTANT SAFETY RECALL NOTICE

NHTSA NO. 14V-297

DATE: **JULY 03, 2014**

TO: **U.S. DEALERS**

SUBJECT: RECALL R14XD ROUSH PROPANE TANK FUEL SUPPLY LINE FITTING

This notice is sent to you in accordance with the requirements of the National Traffic and Motor Vehicle Safety Act.

Bird Body Company has decided that a defect which relates to motor vehicle safety exists in certain 2012 and 2013 model year Blue Bird "Vision" model school buses manufactured from January 10, 2012 through April 24, 2013 and equipped with Roush CleanTech LLC propane fuel systems.

Blue Bird has determined that under certain circumstances corrosion can and will develop affecting the integrity of the fuel supply valve fitting on the fuel tank causing the connection to weaken. This failure may result in possible leakage of propane autogas, which could potentially lead to fire.

To remedy this condition the aluminum fuel supply valve fittings on the Roush CleanTech propane tanks will be replaced with a new stainless steel fuel supply valve fitting. Only Roush CleanTech propane tanks identified within the following ranges of propane tank serial numbers installed on Blue Bird buses are affected by this recall.

80252 through 80543
81485 through 89164
262424 through 270072
A12102-002 through A12102-030

The enclosed R14XD Recall Inspection Sheet must be completed and returned to Blue Bird in the enclosed pink postage prepaid reply envelope to verify applicability of the Roush CleanTech propane tank serial number and fuel supply valve assembly part number to this recall. A Roush Propane Tank Serial Number Identification page with examples of propane tank data plates and location of serial numbers is also enclosed.

BLUE BIRD BODY COMPANY
P.O. Box 937 – 402 Blue Bird Blvd – Fort Valley, Georgia – (478) 825-2021

AGENDA

BLUE BIRD

Replacement stainless steel fuel supply valve fittings will be provided to you at no charge for those buses with propane tank serial numbers within the Roush CleanTech propane fuel tank serial number ranges.

If our records indicate buses subject to this recall were delivered in your service area, a printout identifying affected buses is enclosed. Dealers should verify correct owners and assure that complete mailing and shipping addresses are provided for each listed owner.

Owners are being advised they may contact their Blue Bird dealer to arrange to have this recall performed.

Owners are also being advised that that may contact their nearest Roush CleanTech Authorized Service Center to have this recall performed. You can assist customers in locating their nearest Roush CleanTech Authorized Service Center by calling Roush CleanTech at 1-800-597-6874 and Roush CleanTech will prove further instructions on how to have your customers bus repaired. Be sure to have the customers VIN number and propane tank serial number available when you contact Roush CleanTech.

In addition, customers with personnel qualified to perform work on propane autogas systems, are being advised they may perform this recall themselves.

Labor time to inspect and record the serial number of the propane tanks is 0.1 hour (6 minutes) per bus. Be sure to return this sheet to Blue Bird Recall Administration so documentation of propane tank serial numbers can be retained.

Labor time to replace the propane tank fuel valve fitting is 0.5 hours (30 minutes) per bus.

For repairs performed by 'the Blue Bird Dealer', the Dealer may submit 'campaign-type' claims in iWarranty for labor reimbursement. For repairs performed by 'other than the Blue Bird Dealer', the Owner's recall notification letter includes a reply sheet that the Owner can send to Blue Bird Recall Administration for reimbursement of labor costs to the Owner."

If you have in your possession or have sold a bus that was purchased from another dealer that may be affected by this recall, please notify Blue Bird Body Company Recall Administration at 478-822-2242.

Federal law requires that any vehicle lessor receiving this recall notice must forward a copy of this notice to the lessee within ten days.

AGENDA

BLUE BIRD

Dealers are reminded of their responsibilities under section 154 of The National Traffic and Motor Vehicle Safety Act of 1991. Dealers are required to complete modifications on units in their inventory before delivering to the final owner. Reference Blue Bird Body Company Distributor Memo No. 42-92.

Questions regarding this recall campaign should be directed to me at (478) 822-2242.

Sincerely,

Bill Coleman

Bill Coleman
Corporate Recall Administrator
Blue Bird Body Company

AGENDA

BLUE BIRD

R14XD

IMPORTANT SAFETY RECALL NOTICE

NHTSA NO. 14V-297

July 03, 2014

Dear Blue Bird Owner:

This important safety recall notice applies to your buses identified by both Blue Bird body number and Vehicle Identification Number (VIN) on the enclosed yellow cover sheet.

This notice is sent to you in accordance with the requirements of the National Traffic and Motor Vehicle Safety Act.

Blue Bird Body Company has decided that a defect which relates to motor vehicle safety exists in certain 2012 and 2013 model year Blue Bird "Vision" model school buses manufactured from January 10, 2012 through April 24, 2013 and equipped with Roush CleanTech LLC propane fuel systems.

Blue Bird has determined that under certain circumstances corrosion can and will develop affecting the integrity of the fuel supply valve fitting on the fuel tank causing the connection to weaken. This failure may result in possible leakage of propane autogas, which could potentially lead to fire.

To remedy this condition the aluminum fuel supply valve fittings on the Roush CleanTech propane tanks will be replaced with a new stainless steel fuel supply fitting. Only Roush CleanTech propane tanks identified within the following ranges of propane tank serial numbers installed on Blue Bird buses are affected by this recall.

80252 through 80543
81485 through 89164
262424 through 270072
A12102-002 through A12102-030

The enclosed R14XD Recall Inspection Sheet must be completed and returned to Blue Bird in the enclosed pink postage prepaid reply envelope to verify applicability of the Roush CleanTech propane tank serial number and fuel supply valve assembly part number to this recall. A Roush Propane Tank Serial Number Identification page with examples of propane tank data plates and location of serial numbers is also enclosed.

Replacement stainless steel fuel supply valve fittings will be provided to you at no charge for those buses with propane tank serial numbers within the Roush CleanTech propane fuel tank serial number ranges.

BLUE BIRD BODY COMPANY
P.O. Box 937 – 402 Blue Bird Blvd – Fort Valley, Georgia – (478) 825-2021

BLUE BIRD

You may contact your Blue Bird dealer to arrange to have this recall performed. Be sure to have your Blue Bird VIN number and propane tank serial number available when you place your call.

Or, you may contact your nearest Roush CleanTech Authorized Service Center to have this recall performed. If you need help in locating your nearest Roush CleanTech Authorized Service Center you may call Roush CleanTech at 1-800-597-6874 and Roush CleanTech will provide further instructions on how to have your bus repaired. Be sure to have your Blue Bird VIN number and propane tank serial number available when you place your call.

If you prefer and have personnel qualified to perform work on propane autogas systems, you may perform this recall remedy yourself or you may have a repair facility convenient to you that is qualified to work on propane autogas systems perform the recall remedy.

Labor time to inspect and record the serial number on each propane tank is 0.1 hour (6 minutes) per bus.

Labor time to replace the propane tank fuel valve fitting is 0.5 hours (30 minutes) per bus.

Repair performed by a Blue Bird dealer or Roush CleanTech Authorized Service Center will be performed at no charge to you.

If recall remedy is performed by your qualified personnel or a qualified repair facility convenient to you, reimbursement for labor may be obtained by completing the enclosed pink **"Labor Reimbursement"** reply sheet and returning it to Blue Bird in the enclosed **pink** postage prepaid reply envelope.

If you no longer own the subject bus(es), please complete the appropriate section of the yellow cover sheet and return to Blue Bird in the enclosed pink postage prepaid reply envelope.

If the modifications directed by this notification were performed on your bus prior to the receipt of this recall notification, complete and sign the pink recall reply sheet and attach a copy of the work order/invoice. Mail the documents in the pink self-addressed postage prepaid reply envelope included with the recall notification to Blue Bird for warranty consideration. Reimbursements will be made in accordance with the requirements of the National Highway Transportation Safety Act, Title 49 Code of Federal Regulations, Parts 573 and 577.

Federal law requires that any vehicle lessor receiving this recall notice must forward a copy of this notice to the lessee within ten days.

BLUE BIRD

If Blue Bird Body Company or Roush CleanTech LLC should fail to or is unable to remedy this condition without charge to you, you may contact:

ADMINISTRATOR
NATIONAL HIGHWAY TRAFFIC SAFETY ADMINISTRATION
1200 NEW JERSEY AVENUE, SE
WASHINGTON, D.C. 20590

Or, you may call The National Highway Traffic Safety Administration toll free at:

1-888-327-4236 TTY 1-800-424-9153 Or, go to: HTTP://WWW.SAFERCAR.GOV

Questions regarding this recall campaign should be directed to me at (478) 822-2242.

Sincerely,

Bill Coleman

Bill Coleman
Corporate Recall Administrator
Blue Bird Body Company

AGENDA

Recall R14XD Recall Inspection Form
Roush CleanTech Propane Tank Serial Numbers

Blue Bird Body Number	Propane Tank Serial Number	Date Inspected and Recorded

Propane Tank Serial Number Inspection Performed By:

School or Company Name

Address

City, State, ZIP

Signature

Print Name

Telephone Number

Roush Propane Tank Serial Number Identification

Shown below are the three types of propane tank data plates used on Blue Bird buses. The data plates are mounted in approximately the same area (mid-tank on the bottom side) on the tank. Serial number can be found in location indicated by red arrows.

Fig. 1

Located at top center of data plate

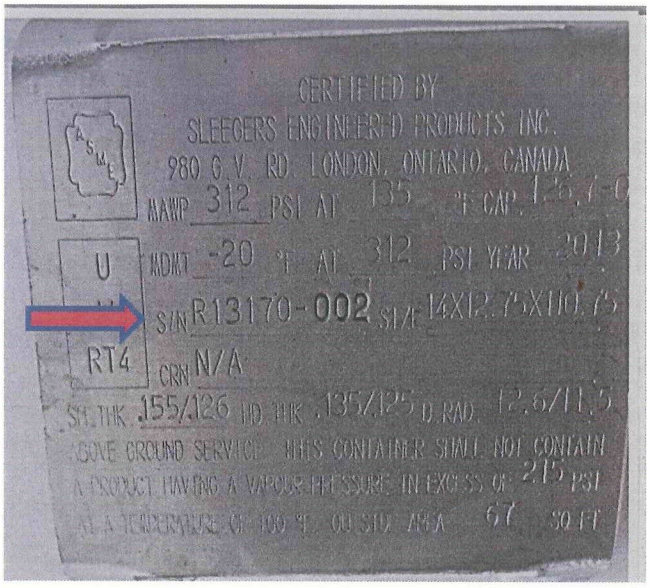

Fig 2

Located at left center of data plate

Fig. 3

Located at right top of data plate

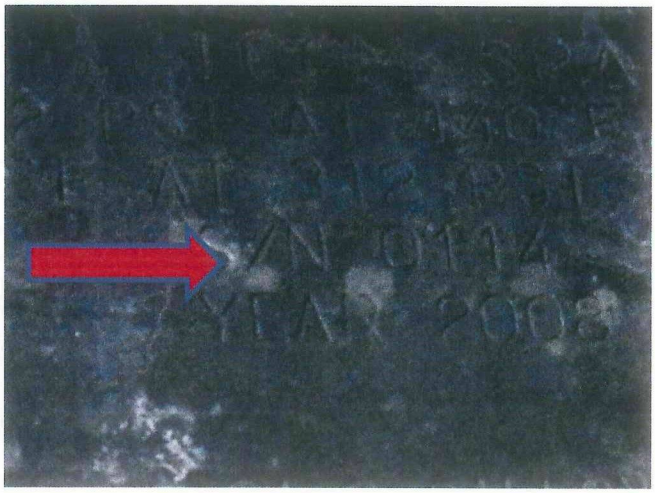

Fig 3a

Serial number detail (ex. S/N 0114)

Serial numbers shown are for reference only.

Fuel Supply Line Purging Procedure

The following procedure will evacuate fuel from only the fuel supply line, for replacement of the fuel supply valve quick-connect fitting. The fuel supply valve quick-connect fitting must be replaced after performing this procedure. For any other fuel system repairs, follow the recommended fuel evacuation procedure.

DANGER

Technicians working with, or around, fuel systems should be properly trained to utilize extreme care and caution at all times. Failure to exercise extreme caution and care may lead to serious accidents which can result in property damage, personal injury and/or death.

DANGER

LPG is under pressure, wear adequate eye protection. When LPG is discharged into the atmosphere, the rapid change in pressure can cause a refrigerant condition in the fuel (quick cooling) and can harm your skin or cause serious burns much like frostbite. Always wear appropriate protective gloves. Failure to heed this warning can result in serious personal injury.

DANGER

Propane is heavier than air and seeks the lowest available level when released to the atmosphere. Keep heat, sparks, flames, static electricity or other sources of ignition out of the area when venting or purging the fuel lines or tank. Failure to heed this danger can result in severe personal injury or property damage.

WARNING

Liquid propane is cold. The temperature of propane in its liquid state at atmospheric pressure is –44°F (–42°C). Wear eye and ear protection during venting and repair operations. Keep moisture away from the valves. Failure to heed this warning can result in personal injury.

1. Close the manual shutoff valve on the tank supply valve. Refer *Operating The Manual Shutoff Valve* for more information.
2. Remove the fuel pump fuse(s). This disconnects the power to the fuel pumps. Refer to the *Vehicle Specific Service Manual* for fuse location and quantity.
3. Start the engine and let it run until it stalls. This purges the fuel supply line of liquid propane.
4. Turn the key to the off position.
5. Remove the negative battery cable from the battery.
6. Using a 3/4-inch line wrench, slowly loosen fuel supply valve quick-connect fitting. Stop loosening as soon as propane begins to escape.
7. If the supply valve quick-connect fitting cannot be loosened with a 3/4-inch line wrench, refer to the *Fuel Line Purging* procedure to purge all fuel lines and fuel rails.
8. When propane is no longer escaping from the supply valve quick-connect fitting, the component can be replaced. Refer to the *Supply Valve Quick-Connect Fitting* removal and installation procedure.

NOTE

There may still be a small amount of propane in the lines after completing this procedure. Open the lines slowly and cautiously to bleed off any remaining propane.

Refer to the 2012 Ford E-150 / E-250 / E-350 / E-450 Service Manual available at www.roushcleantech.com/service

Supply Valve Quick-Connect Fitting

⚠ DANGER

A trace amount of propane fuel is released when loosening the fittings. Propane settles to the lowest available surface before dissipating into the atmosphere. Keep heat, sparks, flames, static electricity or other sources of ignition out of the area when venting or purging the fuel lines or tank. Failure to heed this danger can result in severe personal injury or property damage.

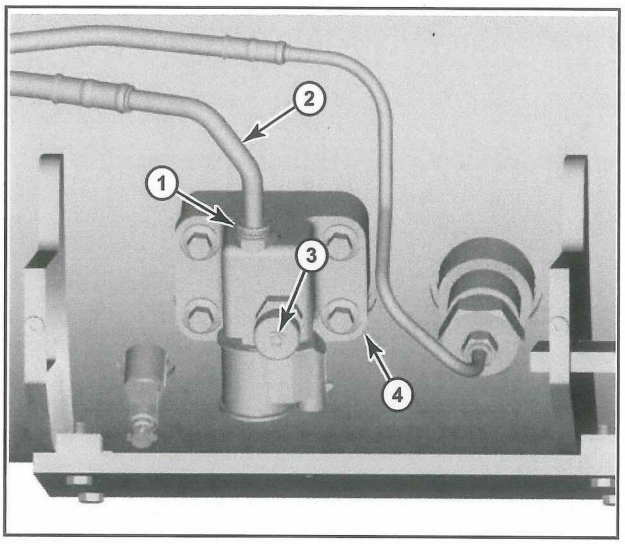

Rear Fuel Line Connections on Tank (Typical)

1. Fuel Supply Valve Quick-Connect Fitting 2. Rear Fuel Supply Line	3. Manual Shutoff Valve 4. Fuel Supply Valve Assembly

REMOVAL

1. Close the manual shutoff valve on the tank. Refer to *Operating the Manual Shutoff Valve* for more information.
2. Purge the propane from the fuel supply lines. Refer to the included *Fuel Supply Line Purging Procedure* for more information.
3. Remove the negative battery cable from the battery.
4. Disconnect the rear fuel supply line from the mounting bracket clips. Refer to the *Vehicle Specific Service Manual* for fuel line retention points.
5. Disconnect the rear fuel supply line at the fuel supply valve quick-connect fitting using the appropriate Jiffy-Tite disconnect tool. Refer to *Tools and Equipment, Special Tools* for more information.
6. Remove the fuel supply valve quick-connect fitting using a 3/4-inch line wrench.
7. If the fuel supply valve quick-connect fitting cannot be removed, replace the fuel supply valve assembly. Refer to the *Fuel Supply Valve Assembly* repair procedure for more information.

INSTALLATION

1. Clean and inspect threads in the fuel supply valve assembly.
2. Install the new fuel supply valve quick-connect fitting (part #85672). Lubricate the O-ring using O-ring lubricant and tighten to 21.5 ±3.5 N•m (15.9 ±2.6 lb-ft).
3. Apply a small amount of o-ring lubricant to the tip of the rear fuel supply line.
4. Install the rear fuel supply line into the fuel supply valve quick-connect fitting. Pull back on the line to ensure a secure connection.
5. Connect the rear fuel supply line to the mounting brackets.
6. Connect the negative battery cable to the battery.
7. Once the repair is complete, refer to *Preparing Vehicle For Use After Service.*

Refer to the 2012 Ford E-150 / E-250 / E-350 / E-450 Service Manual available at www.roushcleantech.com/service

AGENDA

BLUE BIRD

Steering Shaft Floor Boot Seal

RECALL

Models Affected: 2012-2016 Model Year Front Engine/Rear Engine All American/TX3/TX4 Buses

ISSUE

Clamp on intermediate steering column shaft bellows may contact steering shaft floor boot seal and tear floor boot seal and bind steering shaft causing difficulty in steering.

CORRECTIVE ACTION

Remove clamp and raise bellows on intermediate steering shaft beyond interference and secure with narrow worm gear clamp.

PROCEDURE

WARNING: Always follow all Federal, State, Local and Shop safety standards and use proper safety equipment, and thoroughly read and understand all instructions before performing these procedures.

1. Park bus on a level surface, apply parking brake, turn off ignition, remove ignition key and chock rear wheels.
2. Inspect steering shaft floor boot seal for wear or damage and slit is toward front of bus.
3. If damaged or worn, complete section **Steering Shaft Floor Boot Seal Replacement** before continuing.
4. After completing section **Steering Shaft Floor Boot Seal Replacement** or if there is no damage or wear to the floor boot seal, complete section **Intermediate Steering Column Shaft Bellows Adjustment**.

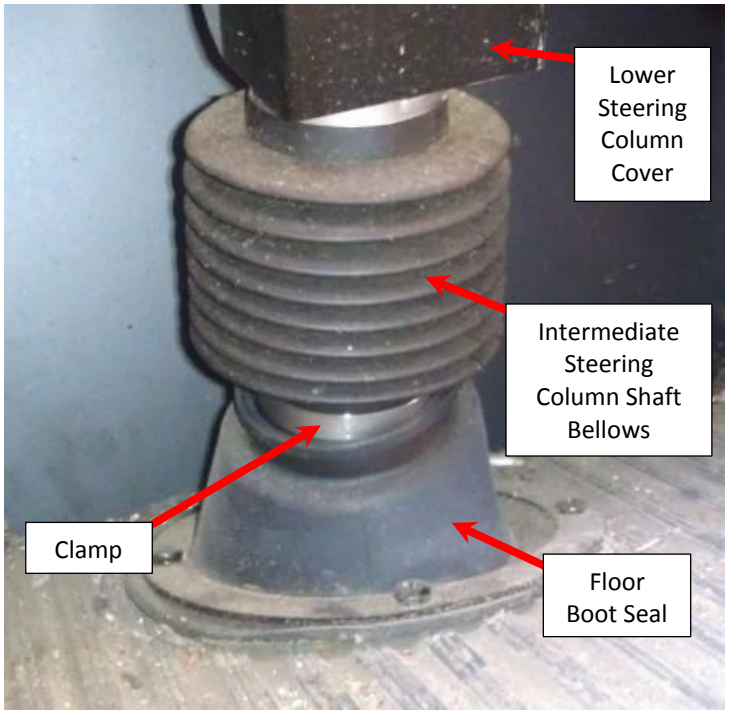

Fig. 1

R14XE

--RECALL CAMPAIGN--

BLUE BIRD

Steering Shaft Floor Boot Seal

RECALL

Intermediate Steering Shaft Assembly Exploded View

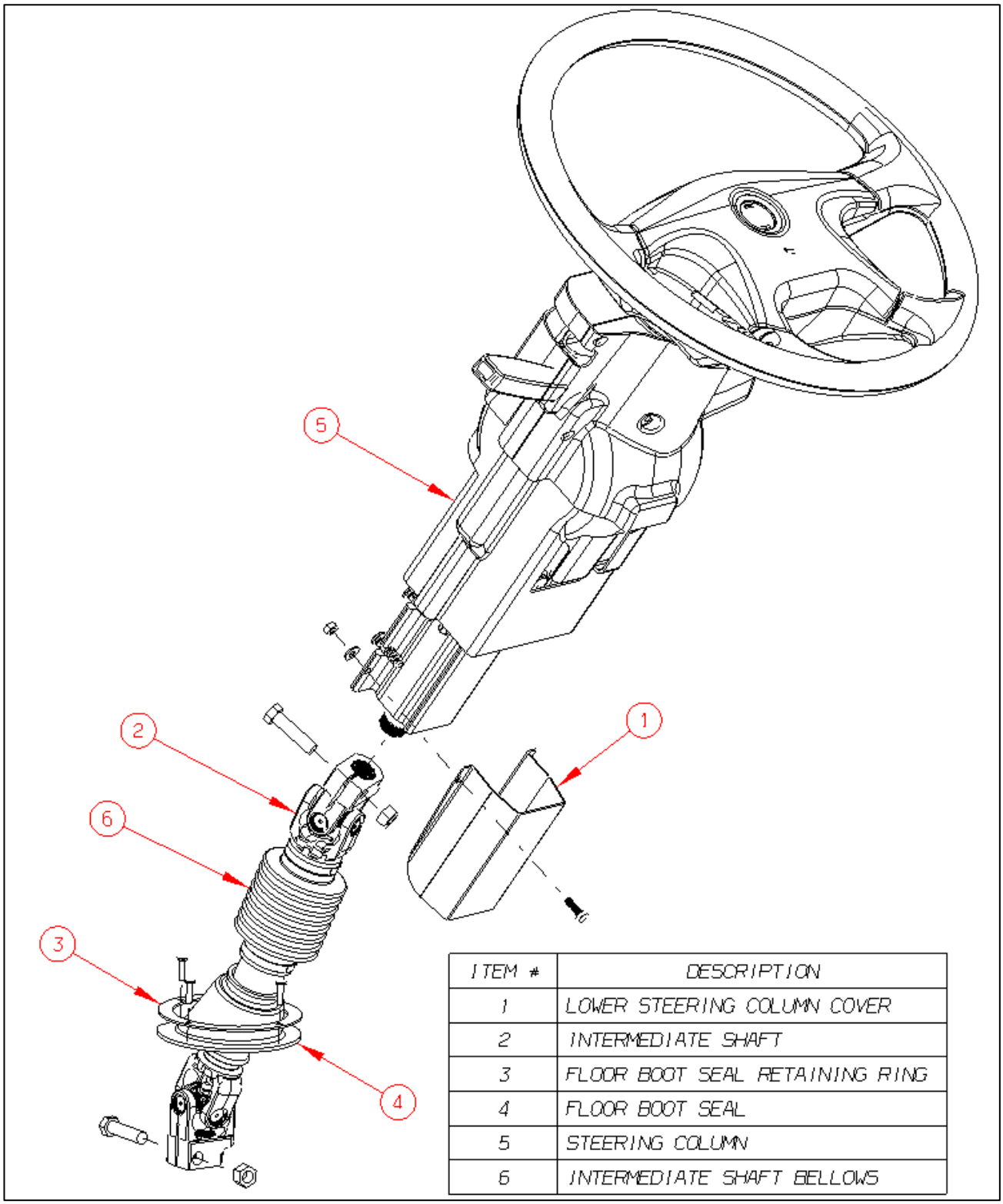

ITEM #	DESCRIPTION
1	LOWER STEERING COLUMN COVER
2	INTERMEDIATE SHAFT
3	FLOOR BOOT SEAL RETAINING RING
4	FLOOR BOOT SEAL
5	STEERING COLUMN
6	INTERMEDIATE SHAFT BELLOWS

BLUE BIRD

Steering Shaft Floor Boot Seal

RECALL

Steering Shaft Floor Boot Seal Replacement
(Use exploded view on page 2 for reference)

1. Remove lower steering column cover and discard fasteners. (Fig. 2)
2. Remove four screws from steering shaft floor boot seal retaining ring.
   Boot seal and retaining ring should be loose from floor. Keep screws for re-use. (Fig. 2)
3. Remove pinch bolt and nut from upper portion of intermediate shaft. Discard bolt and nut. (Fig. 3)
4. Remove pinch bolt and nut from lower portion of intermediate shaft. Discard bolt and nut. (Fig. 3)
5. Compress intermediate shaft together while removing it from splines on steering column and transfer box.
6. Pull intermediate shaft up through hole in floor.
7. Cut off bellows clamp on lower section of intermediate shaft. (See Fig. 3)

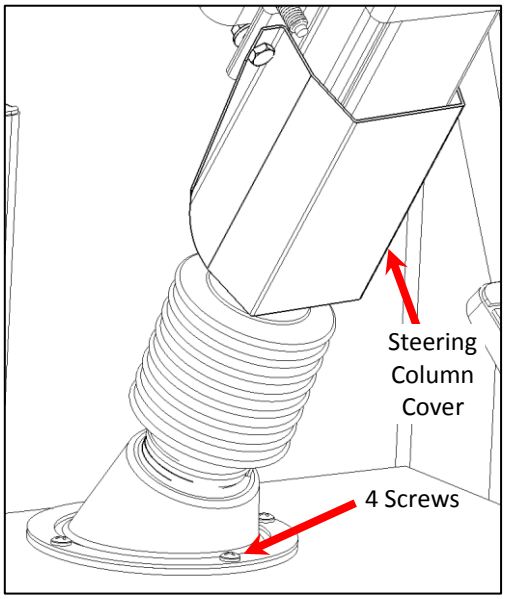

Fig. 2

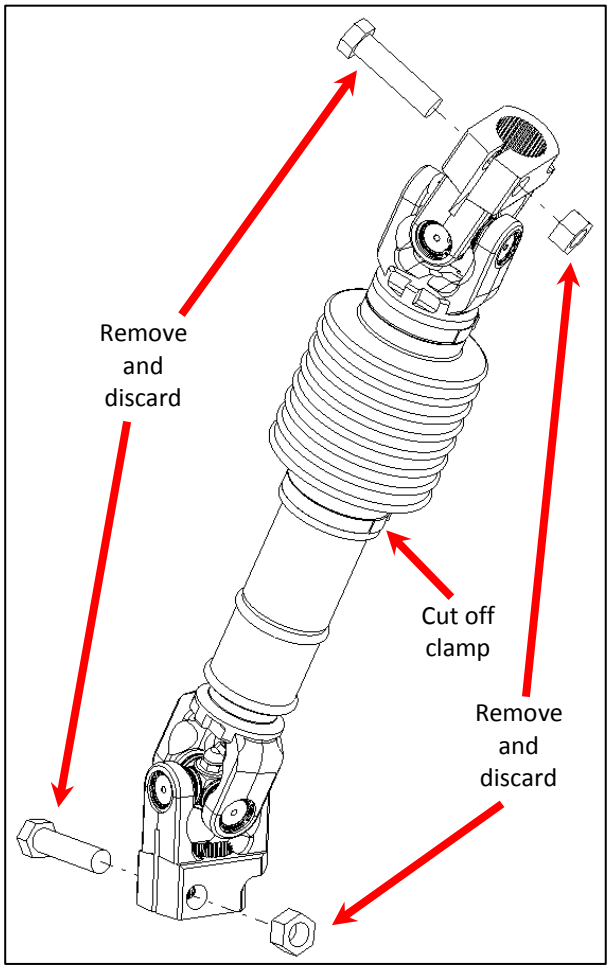

Fig. 3

BLUE BIRD

Steering Shaft Floor Boot Seal

RECALL

Steering Shaft Floor Boot Seal Replacement (continued)

(Use exploded view on page 2 for reference)

8. Replace floor boot seal on intermediate steering shaft and re-install intermediate shaft using new fasteners. (See Fig. 4)
    a. Torque pinch bolts 36-43 FT-LBS.
9. Re-install floor boot seal with retaining ring with four screws. Slit in floor boot seal should be oriented toward front of bus. (See Fig. 5)
10. Install lower steering column cover with new fasteners. (Fig. 6)
    a. Torque nuts to 37-41 FT-LBS.

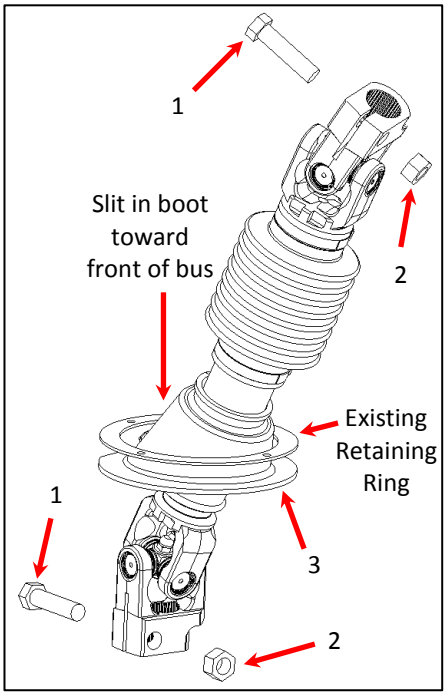

Fig. 4

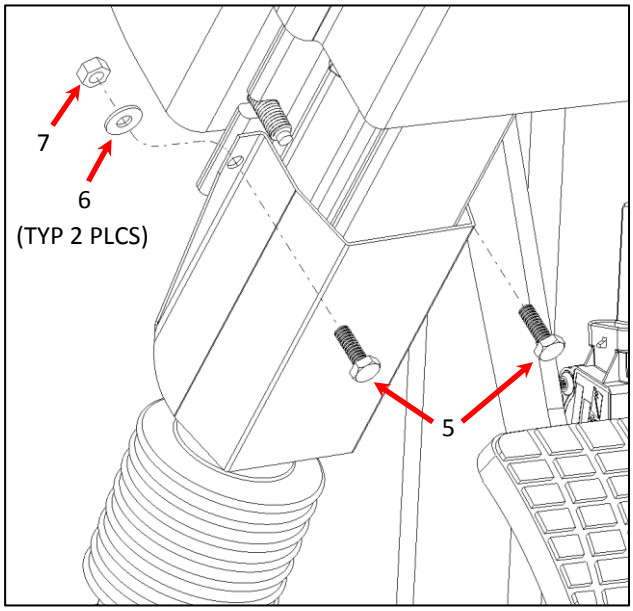

Fig. 6

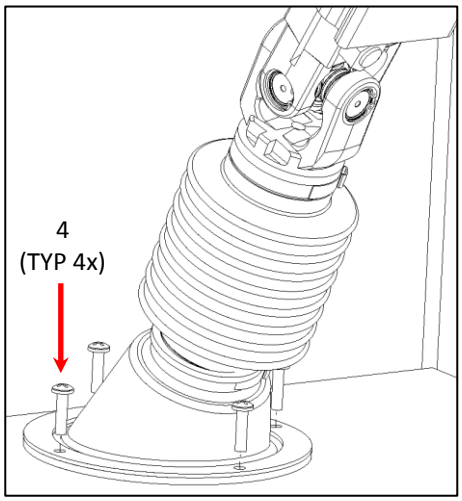

Fig. 5

Parts List for Steering Shaft Floor Boot Seal Replacement			
Item #	Part Number	Description	Qty
1	01916980	CAPSCREW,HEX HD,7/16-14 X 1 3/4,GR8,YELZNDH	2
2	00997080	NUT,HEX HD,7/16-14,LOCKING,GR 8,CADMIUM WAX	2
3	10019820	BOOT,SEAL,STRG SHAFT D3	1
4	01943695	SCREW,10-16X3/4,AB,PH1,PAN HD,BLK ZN	4
5	00977132	CAPSCREW,HEX HD,1/4-20 X 3/4,GR 5,YEL DICH	2
6	01247709	WASHER,FLAT,17/64 ID X 5/8,YEL ZN DICH	2
7	02001345	NUT,HEX HD,1/4-20,LOCKING,YELLOW DICH	2

BLUE BIRD

Steering Shaft Floor Boot Seal

RECALL

Intermediate Steering Column Shaft Boot Adjustment
(Use exploded view on page 2 for reference)

1. Cut off bellows clamp on lower section of intermediate shaft if present. (Fig. 7)
2. Push bellows up until it is no longer in contact with steering shaft floor seal boot.
   a. Minimum 0.50 inch gap between floor seal boot and bellows.
3. Open new worm gear clamp until is releases then secure it around bellows. (Fig. 8)
   a. New clamp must ride all the way around in groove on bellows.
   b. Torque clamp to 10-15 in-lb.
4. Inspect the floor boot seal and bellows for minimum 0.50 inch clearance all the way around the intermediate steering column shaft.
5. Recall is complete. Place bus back into service.

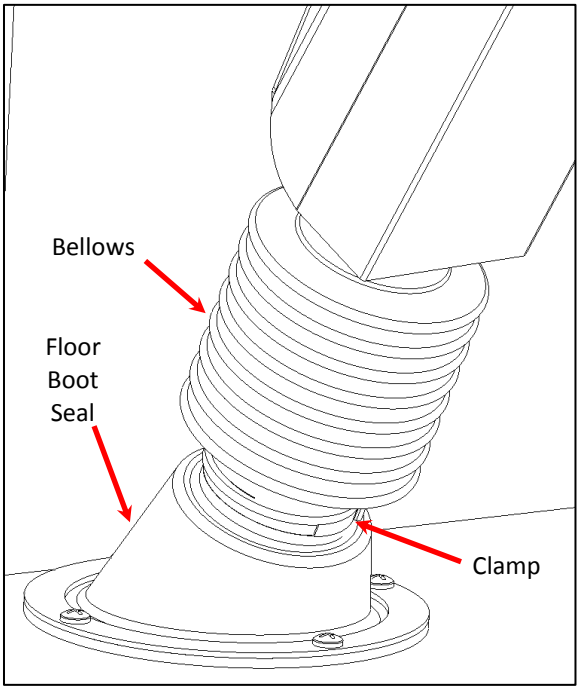

Fig. 7

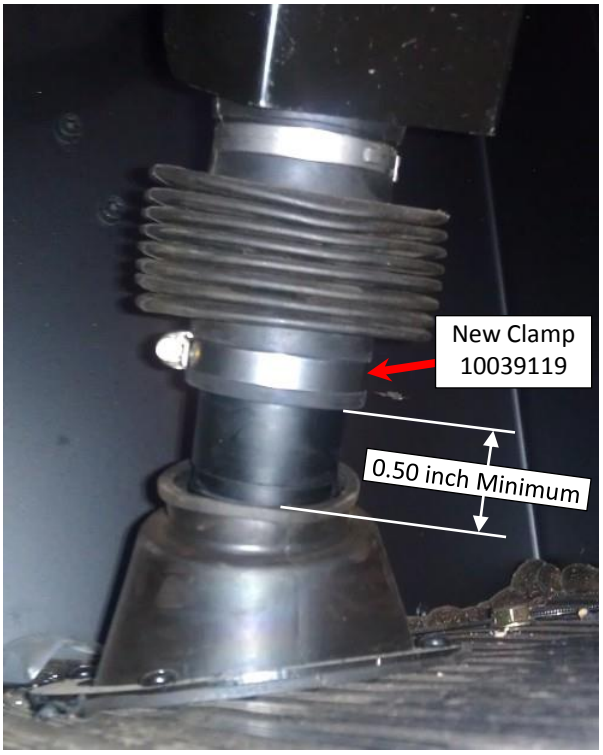

Fig. 8

Parts List for Intermediate Steering Column Shaft Boot Adjustment			
Item #	Part Number	Description	Qty
8	10039119	CLAMP,WORM GEAR,2IN,3524	1

AGENDA

BLUE BIRD

R14XF

IMPORTANT SAFETY RECALL NOTICE

NHTSA RECALL NO. 14V-313 SCHOOL BUS
NHTSA RECALL NO. 14V-314 NON-SCHOOL BUS

DATE: **JULY 15, 2014**

TO: **U.S. DEALERS**

SUBJECT: **RECALL R14XF PASSENGER COMPARTMENT UNDERSEAT HEATER HOSE FAILURE**

This notice is sent to you in accordance with the requirements of the National Traffic and Motor Vehicle Safety Act.

Blue Bird Body Company has decided that a defect which relates to motor vehicle safety exists in certain 2008 through 2013 model year Blue Bird All American rear engine model school and non-school buses manufactured from April 03, 2007 through December 15, 2012 and equipped with optional Cummins ISC and ISL-G CNG engines.

On the subject buses, the original engine thermostat, under certain conditions at high engine RPM, may cause a high pressure pulsation in the coolant flow. This pulsation could over time weaken the inner lining of the heater supply hose in the passenger compartment resulting in the potential for the hose to fail and allow hot coolant to enter the passenger compartment. Personal injury could occur should passengers come in contact with the hot engine coolant. Blue Bird is conducting a recall to correct this defect.

To remedy this defect, the engine thermostat will be changed to a new "barrel-type" thermostat which does not have the tendency to create a pulsation at high engine RPM. In addition, all coolant supply hoses within the passenger compartment will be replaced and protective covers placed over the joint connections at each underseat heater.

If our records indicate buses subject to this recall were delivered in your service area, a printout identifying affected buses by body number and VIN is enclosed. **Dealers should verify correct owners and assure that complete mailing and shipping addresses are provided for each listed owner.**

BLUE BIRD BODY COMPANY
P.O. Box 937 – 402 Blue Bird Blvd – Fort Valley, Georgia – (478) 825-2021

AGENDA

BLUE BIRD

If you have in your possession or have sold a bus that was purchased from another dealer that may be affected by this recall, please notify me at 478-822-2242.

Labor time to perform Recall R14XF is 4.2 hours per bus.

Parts to complete Recall R14XF must be obtained from Blue Bird Recall Administration. Owners are being advised to return their yellow cover sheet with correct shipping address indicated to receive parts.

For repairs performed by 'the Blue Bird Dealer', the Dealer may submit 'campaign-type' claims in iWarranty for labor reimbursement. For repairs performed by 'other than the Blue Bird Dealer', the Owner's recall notification letter includes a reply sheet that the Owner can send to Blue Bird Recall Administration for reimbursement of labor costs to the Owner.

Federal law requires that any vehicle lessor receiving this recall notice must forward a copy of this notice to the lessee within ten days.

Dealers are reminded of their responsibilities under section 154 of The National Traffic and Motor Vehicle Safety Act of 1991. Dealers are required to complete modifications on units in their inventory before delivering to the final owner. Reference Blue Bird Body Company Distributor Memo No. 42-92.

Questions regarding this recall campaign should be directed to me at (478) 822-2242.

Sincerely,

Bill Coleman

Bill Coleman
Corporate Recall Administrator
Blue Bird Body Company

AGENDA

BLUE BIRD

R14XF

IMPORTANT SAFETY RECALL NOTICE

NHTSA RECALL NO. 14V-313 SCHOOL BUS
NHTSA RECALL NO. 14V-314 NON-SCHOOL BUS

July 15, 2014

Dear Blue Bird Owner:

This important safety recall notice applies to your buses identified by both Blue Bird body number and Vehicle Identification Number (VIN) on the attached yellow cover sheet.

This notice is sent to you in accordance with the requirements of the National Traffic and Motor Vehicle Safety Act.

Blue Bird Body Company has decided that a defect which relates to motor vehicle safety exists in certain 2008 through 2013 model year Blue Bird All American rear engine model school and non-school buses manufactured from April 03, 2007 through December 15, 2012 and equipped with optional Cummins ISC and ISL-G CNG engines.

On the subject buses, the original engine thermostat, under certain conditions at high engine RPM, may cause a high pressure pulsation in the coolant flow. This pulsation could over time weaken the inner lining of the heater supply hose in the passenger compartment resulting in the potential for the hose to fail and allow hot coolant to enter the passenger compartment. Personal injury could occur should passengers come in contact with the hot engine coolant. Blue Bird is conducting a recall to correct this defect.

To remedy this defect, the engine thermostat will be changed to a new "barrel-type" thermostat which does not have the tendency to create a pulsation at high engine RPM. In addition, all coolant supply hoses within the passenger compartment will be replaced and protective covers placed over the joint connections at each underseat heater.

Your Blue Bird bus(es) affected by this recall are identified by both body serial number(s) and vehicle identification number (VIN) on the enclosed yellow and pink reply sheets. If you no longer own the subject bus(es), please complete the appropriate section of the yellow reply sheet and return to Blue Bird in the enclosed pink postage prepaid envelope.

You may contact your Blue Bird dealer to arrange to have this recall performed. Or, if you prefer, you may perform this recall yourself or have a qualified repair facility convenient to you perform this recall. A qualified technician should perform this recall.

BLUE BIRD BODY COMPANY
P.O. Box 937 – 402 Blue Bird Blvd – Fort Valley, Georgia – (478) 825-2021

AGENDA

BLUE BIRD

To receive replacement parts for Recall R14XF sign and return the enclosed yellow reply sheet to Blue Bird in the pink, self-addressed, postage prepaid envelope. Be sure to provide a valid shipping address as UPS does not deliver to P.O. Boxes. You should retain a copy of the reply sheet for your records.

Labor time to perform recall R14XF is 4.2 hours.

Reimbursement for labor may be obtained by completing the pink "Labor Reimbursement" sheet provided and returning it to Blue Bird in the enclosed pink postage prepaid envelope. Labor Reimbursement sheets may also be faxed to 478-822-2467.

If the modifications directed by this notification were performed on your bus prior to the receipt of this recall notification, complete and sign the recall reply sheet and attach a copy of the work order/invoice. Mail the documents in the **pink** self-addressed postage paid envelope included with the recall notification to Blue Bird for warranty consideration. Reimbursements will be made in accordance with the requirements of the National Highway Transportation Safety Act, Title 49 Code of Federal Regulations, Parts 573 and 577.

Federal law requires that any vehicle lessor receiving this recall notice must forward a copy of this notice to the lessee within ten days.

If Blue Bird Body Company should fail to or is unable to remedy this condition without charge to you, you may contact:

ADMINISTRATOR
NATIONAL HIGHWAY TRAFFIC SAFETY ADMINISTRATION
1200 NEW JERSEY AVENUE, SE
WASHINGTON, D.C. 20590

Or, you may call The National Highway Traffic Safety Administration toll free at:

1-888-327-4236 TTY 1-800-424-9153 Or, go to: HTTP://WWW.SAFERCAR.GOV

Questions regarding this recall campaign should be directed to me at (478) 822-2242.

Sincerely,

Bill Coleman

Bill Coleman
Corporate Recall Administrator
Blue Bird Body Company

BLUE BIRD

Coolant Thermostat and Passenger Compartment Heater Hose Replacement

RECALL

Models Affected: 2008-2013 TX3, TX4, and All American Rear Engine Buses with Cummins ISC & ISL Engines

ISSUE

The original engine thermostat, under certain conditions at high engine RPM, may cause a high pressure pulsation in the coolant flow. This pulsation could, over time, weaken the inner lining of the heater supply hose in the passenger compartment resulting in the potential for the hose to fail and allow hot engine coolant to enter the passenger compartment.

CORRECTIVE ACTION

The engine thermostat will be changed to a new 'barrel-type" thermostat which does not have the tendency to create a pulsation at high engine RPM. In addition, all coolant supply hoses within the passenger compartment will be replaced and protective covers placed over the joint connections at each underseat heater.

PROCEDURE

WARNING: Always follow all Federal, State, Local, and Shop safety standards and use proper safety equipment, and thoroughly read and understand all instructions before performing these procedures.

WARNING: Do not remove the pressure cap from a hot engine. Wait until the coolant temperature is below 50°C [120°F] before removing the pressure cap. Heated coolant spray or steam can cause personal injury.

WARNING: Coolant is toxic. Keep away from children and pets. If not reused, dispose of in accordance with local environmental regulations.

Thermostat Replacement

1. Park the bus on a level surface, apply parking brake, switch engine off, remove ignition key and chock wheels.

2. Disconnect batteries. (negative[-] cable first, then positive[+])

3. Drain the coolant per *Cooling System Drain, Flush & Refill* section in your Blue Bird service manual.

4. Remove the radiator hose from the water outlet connection. (Fig. 1)

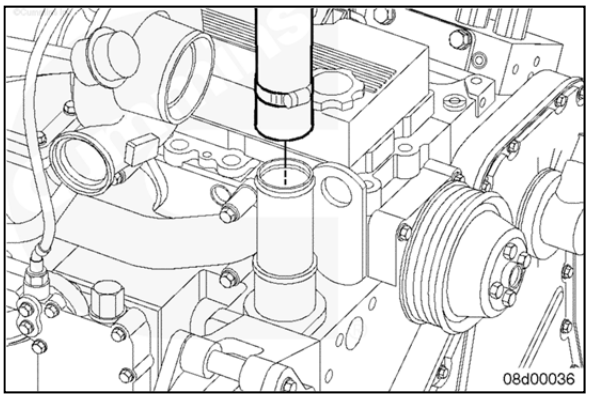

Fig. 1

BLUE BIRD

Coolant Thermostat and Passenger Compartment Heater Hose Replacement

Thermostat Replacement (continued)

5. Remove the water outlet connection capscrews and water outlet connection. (Fig. 2)

6. Remove the thermostat and discard. (Fig. 2)

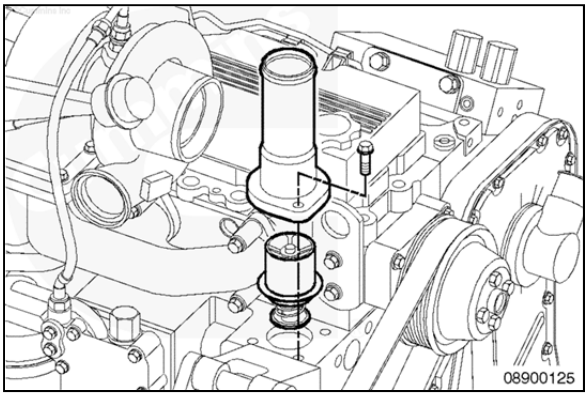

Fig. 2

7. Clean all of the mating surfaces. (Fig 3)

   NOTE: Do not let any debris fall into the thermostat cavity when cleaning the surfaces.

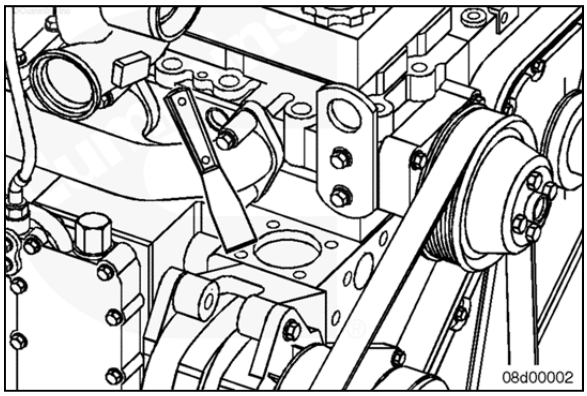

Fig. 3

8. Install the new thermostat (BB# 10032468) into the water outlet connection. Make sure the top and bottom o-rings are in place. If the o-rings are damaged, replace with new o-rings. (Fig. 4)

9. Install the water outlet connection and mounting capscrews. (Fig. 4)
   Torque Value: 24 nm [212 in-lb]

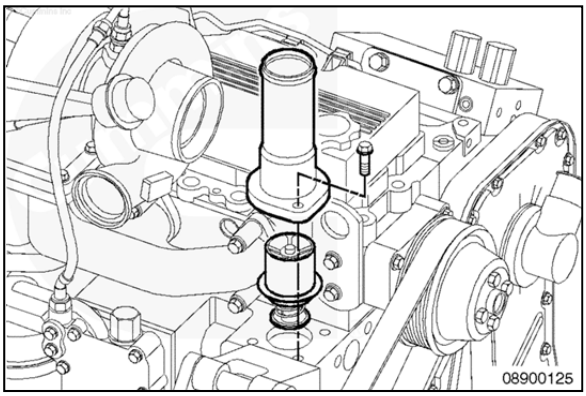

Fig. 4

RECALL

Coolant Thermostat and Passenger Compartment Heater Hose Replacement

Thermostat Replacement (continued)

10. Install radiator hose on the water outlet connection. (Fig. 5)
    Torque: 7.50 – 8.30 FT-LBS.

11. Thermostat replacement complete. Proceed to Heater Hose Replacement.

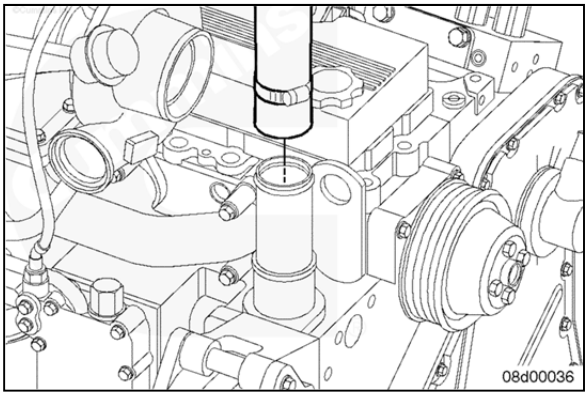

Fig. 5

Parts List		
Part #	Description	Qty
10032468	THERMOSTAT,ENGINE COOLANT SYSTEM,CUMMINS	1

BLUE BIRD

Coolant Thermostat and Passenger Compartment Heater Hose Replacement

RECALL

Heater Hose Replacement

1. Check if heater supply/return hoses were connected to engine correctly per Fig 1 hose routing. ***If hoses are not connected correctly at engine supply/return manual shutoff valves, replace only the section of hose inside bus from bulkhead connector to first heater. Disconnect/reconnect "supply/return" hoses in engine compartment per Fig 1 supply/return hose routing.***

2. Disconnect supply heaters coolant hose at engine cutoff valve (see Fig 1).

3. With 10 p.s.i. of shop air pressure, blow air through supply hose to remove coolant from heater system (see Fig 1 for location of supply hose in engine compartment).

4. Inside bus, remove heater hose covers to gain access to heaters supply hose.

5. Remove original heaters **supply** hose inside passenger compartment only and replace with new hose part no. 10023231 (see Fig 1). Torque all heater hose clamps to 34 inch lbs.

6. Reinstall passenger compartment heater hose covers. If gap is present at hose wheelhousings ***transition*** covers, install bulb seal part no. 10020905 on end and foam tape part no. 00830059 on flange of transition cover to close out gaps per Fig 2.

7. At each underseat heater, remove seat cushion and install heater pipe cover part no. 10033962. Back drill .056 hole on each side and attach cover with two #10 screws part no. 01589522 per Fig 3. Reinstall seat cushion

8. Reconnect batteries (positive {+} cable first, then negative {-}.

9. Fill engine cooling/heater system per *COOLANT FILL PROCEDURE* (see Fig 4).

   See Service Update SU1315 *CUMMINS COOLANT in CUMMINS ENGINES* for approved coolant.

10. Operate engine and check for coolant leaks.

Parts List		
Part #	Description	Qty (per bus)
10023231	HOSE,HEATER,EPDM STANDARD,1 I.D.	30 FT
10020905	SEAL,BULB,CLIP-ON,ELECTRICAL ACCESS DOOR	2 FT
00830059	TAPE,FOAM,1/2X3/4,CLSD CELL NEOPRENE ADH BK	2 FT
10033962	COVER,TRIM,PIPE,U/S HEATER	2
01589522	SCREW,10-16 X 3/4,AB,PH1,PAN HD,YEL ZN	4

BLUE BIRD

Coolant Thermostat and Passenger Compartment Heater Hose Replacement

RECALL

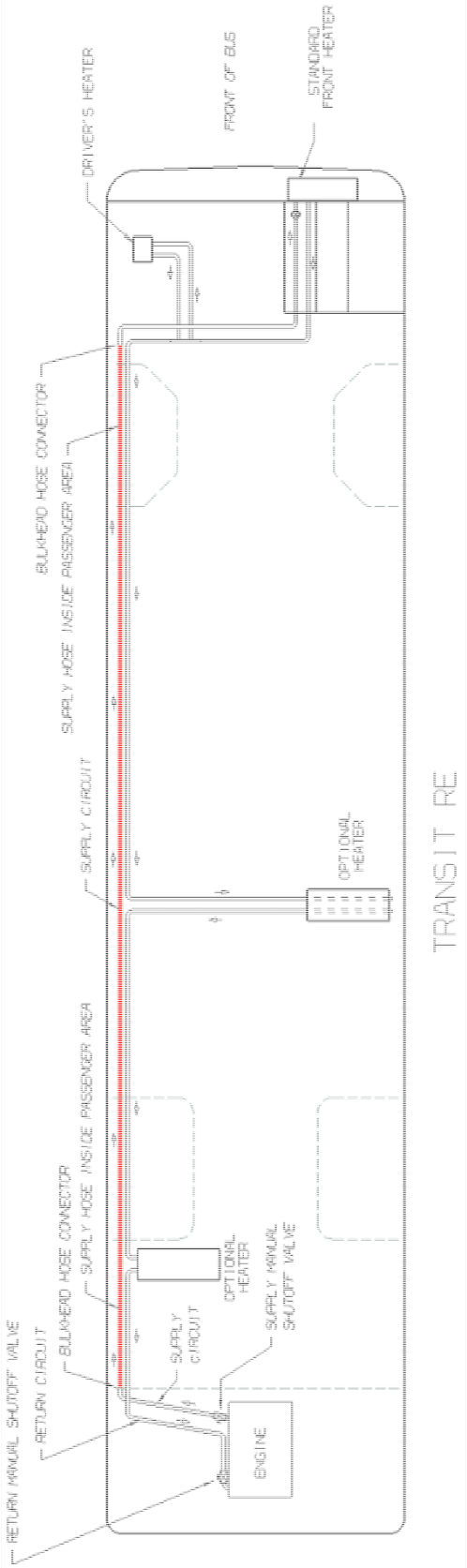

Fig. 1

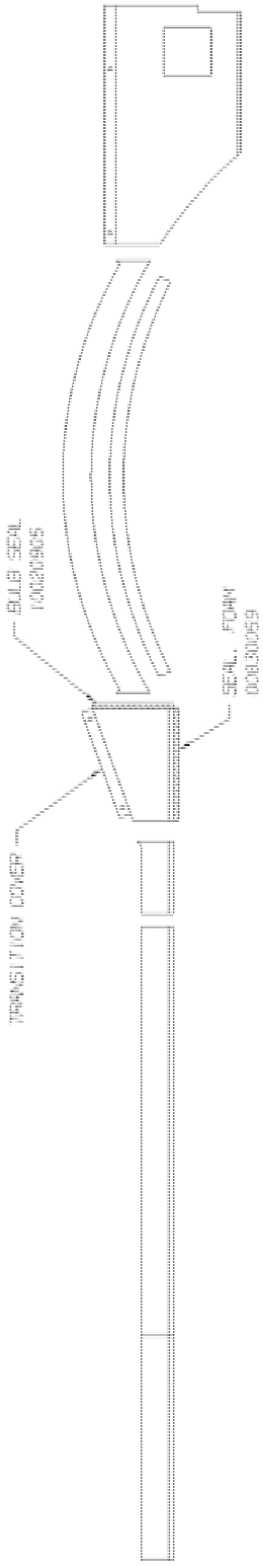

Fig. 2

R 1 4 X F

-RECALL CAMPAIGN-

RECALL

Coolant Thermostat and Passenger Compartment Heater Hose Replacement

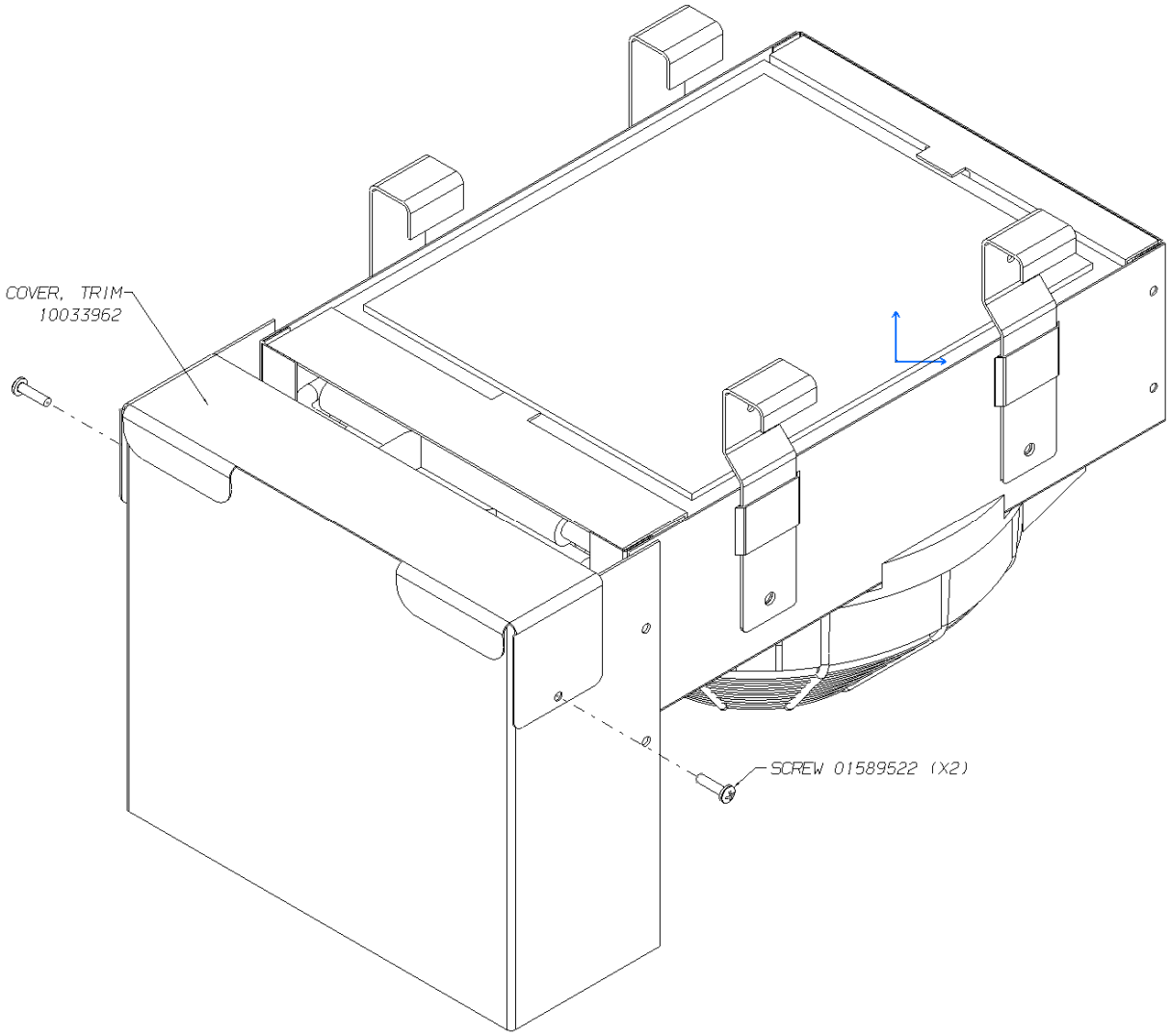

Fig. 3

BLUE BIRD

Coolant Thermostat and Passenger Compartment Heater Hose Replacement

RECALL

COOLANT FILL PROCEDURE
T3/Y3RE 2013

1. OPEN CAB HEATER SUPPLY VALVE AND CLOSE CAB HEATER RETURN VALVE.
2. OPEN THE CAB HEATER BLEEDER VALVE IN THE CAB HEATER RETURN LINE.
3. OPEN UPPER RADIATOR PIPE BLEEDER VALVE NEAR ENGINE COOLANT OUTLET.
4. TURN ON IGNITION TO THE "ON" POSITION, TURN ON HEATER BOOSTER PUMP AND SET DEFROST TEMPERATURE CONTROL TO FULL HOT.
5. FILL COOLANT SYSTEM TO THE "COLD FULL" LINE ON THE TANK.
6. CLOSE THE UPPER RADIATOR PIPE BLEEDER VALVE AS SOON AS COOLANT IS PRESENT AT THE VALVE.
7. LET SYSTEM SETTLE FOR 5 MINUTES, THEN REFILL TO "COLD FULL" LINE (CLOSE CAB HEATER BLEEDER VALVE ONCE COOLANT IS PRESENT AT VALVE).
8. OPEN THE CAB HEATER RETURN VALVE.
9. START ENGINE AND IDLE ONLY LONG ENOUGH FOR THE COOLANT LEVEL IN THE TANK TO STABILIZE AND THEN TURN OFF THE ENGINE.
10. REFILL TANK TO "COLD FULL" LINE.
11. RESTART ENGINE AND IDLE FOR FIVE MINUTES. REFILL TANK TO "COLD FULL" LINE WHILE THE ENGINE IS STILL RUNNING.
12. RUN ENGINE AT GOVERNED SPEED UNTIL ENGINE THERMOSTAT OPENS AND THEN FOR ANOTHER 15-20 MINUTES.
13. RETURN ENGINE TO IDLE AND REFILL TANK TO THE "HOT FULL" LINE IF NEEDED.
14. INSTALL CAP ON TANK. COOLING SYSTEM IS NOW FULLY OPERATIONAL.

Fig. 4

AGENDA

BLUE BIRD

R14XJ

IMPORTANT SAFETY RECALL NOTICE

NHTSA NO. 14V-443 SCHOOL BUS
NHTSA NO. 14V-444 NON- SCHOOL BUS

DATE: SEPTEMBER 29, 2014

TO: U.S. DEALERS

SUBJECT: RECALL R14XJ PROPANE FUEL RETURN LINE LEAKS

This notice is sent to you in accordance with the requirements of the National Traffic and Motor Vehicle Safety Act.

Bird Body Company has decided that a defect which relates to motor vehicle safety exists in certain 2013 through 2015 model year Blue Bird "Vision" model school buses and non-school buses manufactured from December 05, 2011 through July 02, 2014 and equipped with propane autogas fuel systems.

Blue Bird has determined that the propane autogas fuel system fuel return line can fatigue which could lead to a crack in the fuel line near the support bracket. This failure may result in possible leakage of propane autogas, which could potentially lead to fire. To remedy this condition the existing propane fuel return line will be replaced and a new propane fuel return line with support brackets installed.

The existing fuel return line will be replaced and new support brackets will be installed. Estimated labor time to remove and replace the fuel return line is 0.75 hours (45 minutes) per bus. Recall R14XJ will be performed at no cost to the owner.

Roush CleanTech, LLC personnel will be performing this recall on all affected buses with their trained personnel. Roush has already performed this recall on most affected buses. However, customers whose buses have not been corrected will be contacted shortly by a Roush Field Service Representative to arrange a time to have the recall remedy performed.

If Roush authorizes you (the Blue Bird Dealer) to perform the recall remedy the Dealer may submit for labor reimbursement directly to Roush.

If our records indicate buses subject to this recall were delivered in your service area, a printout identifying affected buses is enclosed. Dealers should verify correct owners and assure that complete mailing and shipping addresses are provided for each listed owner.

BLUE BIRD BODY COMPANY
P.O. Box 937 – 402 Blue Bird Blvd – Fort Valley, Georgia – (478) 825-2021

AGENDA

BLUE BIRD

If you have in your possession or have sold a bus that was purchased from another dealer that may be affected by this recall, please notify Blue Bird Body Company Recall Administration at 478-822-2242.

Federal law requires that any vehicle lessor receiving this recall notice must forward a copy of this notice to the lessee within ten days.

Dealers are reminded of their responsibilities under section 154 of The National Traffic and Motor Vehicle Safety Act of 1991. Dealers are required to complete modifications on units in their inventory before delivering to the final owner. Reference Blue Bird Body Company Distributor Memo No. 42-92.

Questions regarding this recall campaign should be directed to me at (478) 822-2242.

Sincerely,

Bill Coleman

Bill Coleman
Corporate Recall Administrator
Blue Bird Body Company

AGENDA

BLUE BIRD

R14XJ

IMPORTANT SAFETY RECALL NOTICE

NHTSA NO. 14V-443 SCHOOL BUSES
NHTSA NO. 14V-444 NON-SCHOOL BUSES

September 29, 2014

Dear Blue Bird Owner:

This important safety recall notice applies to your buses identified by both Blue Bird body number and Vehicle Identification Number (VIN) on the enclosed yellow cover sheet.

This notice is sent to you in accordance with the requirements of the National Traffic and Motor Vehicle Safety Act.

Bird Body Company has decided that a defect which relates to motor vehicle safety exists in certain 2013 through 2015 model year Blue Bird "Vision" model school buses and non-school buses manufactured from December 05, 2011 through July 02, 2014 and equipped with propane autogas fuel systems.

Blue Bird has determined that the propane autogas fuel system fuel return line can fatigue which could lead to a crack in the fuel line near the support bracket. This failure may result in possible leakage of propane autogas, which could potentially lead to fire. To remedy this condition the existing propane fuel return line will be replaced and a new fuel return line with support clamps installed.

The existing fuel return line will be replaced and new support brackets will be installed. Estimated labor time to remove and replace the fuel return line is 0.75 hours (45 minutes) per bus. Recall R14XJ will be performed at no cost to the owner.

Roush CleanTech, LLC personnel will be performing this recall on all affected buses with their trained personnel. You will be contacted shortly by a Roush Field Service Representative to arrange a time to have the recall remedy performed.

If you no longer own the subject bus(es), please complete the appropriate section of the yellow cover sheet and return to Blue Bird in the enclosed pink postage prepaid reply envelope.

If the modifications directed by this notification were performed on your bus prior to the receipt of this recall notification, complete and sign the pink recall reply sheet and attach a copy of the work order/invoice. Mail the documents in the pink self-addressed postage prepaid reply envelope included with the recall notification to Blue Bird for warranty consideration. Reimbursements will be made in accordance with the requirements of the National Highway Transportation Safety Act, Title 49 Code of Federal Regulations, Parts 573 and 577.

BLUE BIRD BODY COMPANY
P.O. Box 937 – 402 Blue Bird Blvd – Fort Valley, Georgia – (478) 825-2021

BLUE BIRD

Federal law requires that any vehicle lessor receiving this recall notice must forward a copy of this notice to the lessee within ten days.

If Blue Bird Body Company or Roush CleanTech LLC should fail to or is unable to remedy this condition without charge to you, you may contact:

ADMINISTRATOR
NATIONAL HIGHWAY TRAFFIC SAFETY ADMINISTRATION
1200 NEW JERSEY AVENUE, SE
WASHINGTON, D.C. 20590

Or, you may call The National Highway Traffic Safety Administration toll free at:

1-888-327-4236 TTY 1-800-424-9153 Or, go to: HTTP://WWW.SAFERCAR.GOV

Questions regarding this recall campaign should be directed to me at (478) 822-2242.

Sincerely,

Bill Coleman

Bill Coleman
Corporate Recall Administrator
Blue Bird Body Company

AGENDA

BLUE BIRD

R14XN

IMPORTANT SAFETY RECALL NOTICE

NHTSA RECALL NO. 14V-510 SCHOOL BUS
NHTSA RECALL NO. 14V-511 NON-SCHOOL BUS

DATE: **OCTOBER 01, 2014**

TO: **U.S. DEALERS**

SUBJECT: **RECALL R14XN RICON LIFT PLATFORM PIVOT PLATE CRACKS**

Dear Blue Bird Dealer:

This important safety recall notice applies to your buses identified by both Blue Bird body number and Vehicle Identification Number (VIN) on the attached pink reply sheet.

This notice is sent to you in accordance with the requirements of the National Traffic and Motor Vehicle Safety Act. Blue Bird Body Company has decided that a safety related defect exists in certain Blue Bird school bus and non-school bus models identified below equipped with a Ricon S-Series model platform wheelchair lift.

2007 through 2015 model year All American model
2007 through 2011 model year Micro Bird model
2007 through 2015 model year Vison model
2007 through 2008 model year conventional model

Under certain conditions present in some applications, the platforms included on the subject Ricon S-Series model platform wheelchair lifts can exhibit cracking of the platform pivot plate while in the stowed position which, if left unchecked, can propagate to the point where separation of the rear portion of the pivot plate occurs rendering the lift potentially inoperable and possibly unsafe for the operator. Blue Bird is conducting a recall to notify you of this defect.

To correct this condition Ricon Corporation will provide parts required to modify the platform pivot plate. Instructions for the modification will be included with the parts.

A printout will be sent to you with the body numbers and VINs of the buses that were delivered in your service area which may have the subject lifts installed. The Ricon recall number is 14E-041.

BLUE BIRD BODY COMPANY
P.O. Box 937 – 402 Blue Bird Blvd – Fort Valley, Georgia – (478) 825-2021

If you are not an authorized Ricon dealer or service center, the nearest Ricon dealer/service center may be located by visiting Ricon Corporation's website and selecting "Dealer Locator" at the bottom left of Ricon's home page. You may also contact Dante Deleo at Ddeleo@wabtec.com or you may call Dante at (818)267-3009.

It is the dealers responsibility to verify that the correct owner name, address and telephone number is provided for each listed vehicle. Any corrections or updates should be made on BBOND. Addresses that cannot be updated on BBOND should be forwarded to the Recall Administrator.

If you have in your possession or have sold a vehicle that was purchased from another dealer that may be affected by this recall, please notify me at 478-822-2242.

Federal law requires that any vehicle lessor receiving this recall notice must forward a copy of this notice to the lessee within ten days.

Dealers are reminded of their responsibilities under section 154 of The National Traffic and Motor Vehicle Safety Act of 1991. Dealers are required to complete modifications or repairs on units in their inventory before delivering to the final owner. Reference Blue Bird Body Company Distributor Memo No. 42-92.

Questions regarding this recall campaign should be directed to me at (478) 822-2242.

Thank you,

Bill Coleman

Bill Coleman
Corporate Recall Administrator
Blue Bird Body Company
478-822-2242
bill.coleman@blue-bird.com

AGENDA

BLUE BIRD

R14XN

IMPORTANT SAFETY RECALL NOTICE

NHTSA RECALL NO. 14V-510 SCHOOL BUS
NHTSA RECALL NO. 14V-511 NON-SCHOOL BUS

October 01, 2014

Dear Blue Bird Owner:

This important safety recall notice applies to your buses identified by both Blue Bird body number and Vehicle Identification Number (VIN) on the attached pink reply sheet.

This notice is sent to you in accordance with the requirements of the National Traffic and Motor Vehicle Safety Act. Blue Bird Body Company has decided that a safety related defect exists in certain Blue Bird school bus and non-school bus models identified below equipped with a Ricon S-Series model platform wheelchair lift.

2007 through 2015 model year All American model
2007 through 2011 model year Micro Bird model
2007 through 2015 model year Vison model
2007 through 2008 model year conventional model

Under certain conditions present in some applications, the platforms included on the subject S-Series model platform wheelchair lifts can exhibit cracking of the platform pivot plate while in the stowed position which, if left unchecked, can propagate to the point where separation of the rear portion of the pivot plate occurs rendering the lift potentially inoperable and possibly unsafe for the operator. Blue Bird is conducting a recall to notify you of this defect.

To correct this condition you will need to contact your nearest Ricon Corporation wheelchair lift dealer. Ricon will provide parts required to modify the platform pivot plate at no charge to the owner. The Ricon recall number is 14E-041.

You can locate your nearest Ricon wheelchair servicing dealer by using the Ricon Dealer Locator at the lower left of the Ricon Website www.riconcorp.com. You may also contact Dante Deleo at Ddeleo@wabtec.com or you may call Dante at (818)267-3009.

If you no longer own the subject bus(es), please complete the appropriate section of the yellow cover sheet and return to Blue Bird in the enclosed pink postage prepaid envelope.

BLUE BIRD BODY COMPANY
P.O. Box 937 – 402 Blue Bird Blvd – Fort Valley, Georgia – (478) 825-2021

When the recall remedy has been performed on your Ricon wheelchair lift(s) complete and return the enclosed R14XN Recall Completion Reply Sheet so we may update our records. This will prevent you from receiving additional follow up notices.

If the remedy directed by this notification was provided for your bus(es) prior to the receipt of this recall notification, complete and sign the pink recall reply sheet and return to Blue Bird Attn: Recall Administrator. Mail the documents in the pink self-addressed postage paid envelope. included with this recall notification.

Federal law requires that any vehicle lessor receiving this recall notice must forward a copy of this notice to the lessee within ten days.

If after contacting Ricon Corporation, do not received replacement parts in a reasonable time and without charge you may contact:

ADMINISTRATOR
NATIONAL HIGHWAY TRAFFIC SAFETY ADMINISTRATION
1200 NEW JERSEY AVENUE, SE
WASHINGTON, D.C. 20590

or you may call The National Highway Traffic Safety Administration toll free at:

1-888-327-4236
TTY: 1-800-424-9153
or go to: http://www.safercar.gov

Questions regarding this recall campaign should be directed to me at (478) 822-2242.

Thank you,

Bill Coleman

Bill Coleman
Corporate Recall Administrator
BLUE BIRD BODY COMPANY

AGENDA

BLUE BIRD

Recall Completion Reply Sheet

Blue Bird Body Company Recall R14XN
(Ricon #14E-041) Ricon Lift Platform Pivot Plate Recall

When the Ricon repair parts for your Ricon wheelchair lift(s) affected by above recall campaign, have been installed, please complete the form below and return to Blue Bird in the pink reply envelope provided. **Completing and returning this form will prevent you from receiving additional follow up notices on this recall.**

Blue Bird Body Number	Ricon Lift Serial Number	Date Ricon Pivot Plate Parts Installed	Parts Installed by:

Form Completed by: _____
(Print Name)

School/Company: _____

Address: _____

City: _____

State: _____ Zip: _____

Signature: _____ Date: _____

AGENDA

Parking Brake Pedal Separation

RECALL

Models Affected: Certain 2015 & 2016 All American Front Engine and Vision Buses Equipped with Hydraulic Brakes

ISSUE

The parking brake pedal assembly on buses equipped with hydraulic brakes may not have been manufactured correctly by the supplier and could separate allowing the pedal to bend. If separation should occur, the bus parking brake may not engage properly.

CORRECTIVE ACTION

Inspect pedal date code. If within defective date code range, remove and replace original parking brake pedal assembly with new replacement parking brake pedal assembly. Do not attempt to install, remove, disassemble or assemble a component until you have read and thoroughly understand the recommended procedures.

R14XR

RECALL CAMPAIGN

PROCEDURE

WARNING: Always follow all Federal, State, Local, and Shop safety standards and use proper safety equipment when performing these procedures. Thoroughly read and understand all instructions before performing this procedure.

Components with stripped threads or damaged parts should be replaced rather than repaired. Do not attempt repairs requiring machining or welding unless specifically stated or approved by the vehicle and component manufacturer. Always wear safety glasses.

Instructions for inspecting park brake pedal assembly for date code.

1. Park bus on a level surface, apply parking brake, switch engine off, remove ignition key.

2. Chock wheels.

3. Locate manufacturing date code on right side of park brake pedal assembly. The date code is the series of numbers beginning with 14. See figure 1 below. Date codes found beginning with year and month of 1406 or 1407 must be replaced. *If any other date codes are found, do not replace pedal assembly.*

4. Once date code is located, ***write date code along with body number and date inspected*** on the Recall R14XR Inspection Reply Sheet included with your recall documents. If date code is within the defective date code range, provide your shipping address, contact name, and telephone number in the space provided at the bottom of the R14XR Inspection Reply Sheet and a new replacement brake pedal assembly will be shipped to you at no charge.

Date Code Location

Fig. 1

Parking Brake Pedal Separation RECALL

Instructions for replacing park brake pedal assembly.

If a replacement park brake pedal is needed, use the following instructions to install the new park brake pedal assembly.

WARNING: Always follow all Federal, State, Local and Shop safety standards and use proper safety equipment when performing these procedures. Thoroughly read and understand all instructions before performing this procedure.

Components with stripped threads or damaged parts should be replaced rather than repaired. Do not attempt repairs requiring machining or welding unless specifically stated or approved by the vehicle and component manufacturer. Always wear safety glasses.

1. Park bus on level surface, apply parking brake, switch engine off, remove ignition key.
2. Chock wheels then release parking brake.
3. Warning: Park brake cable tension must be released. Locate bellcrank at transmission. (Fig. 1) Using a pipe wrench adjusted to the bellcrank width in area shown in Fig 1, rotate bellcrank counter clockwise to remove cable tension and then remove clevis pin.
4. Disconnect parking brake release handle by removing the cotter pin and flat washer and set aside for use later. (Fig. 2) See step 6 on page 4 for cotter pin location.

Fig. 1

Fig. 2

Parking Brake Pedal Separation RECALL

5. Disconnect brake switch connector (Fig. 3) and solenoid connector, if present. (Fig.4)

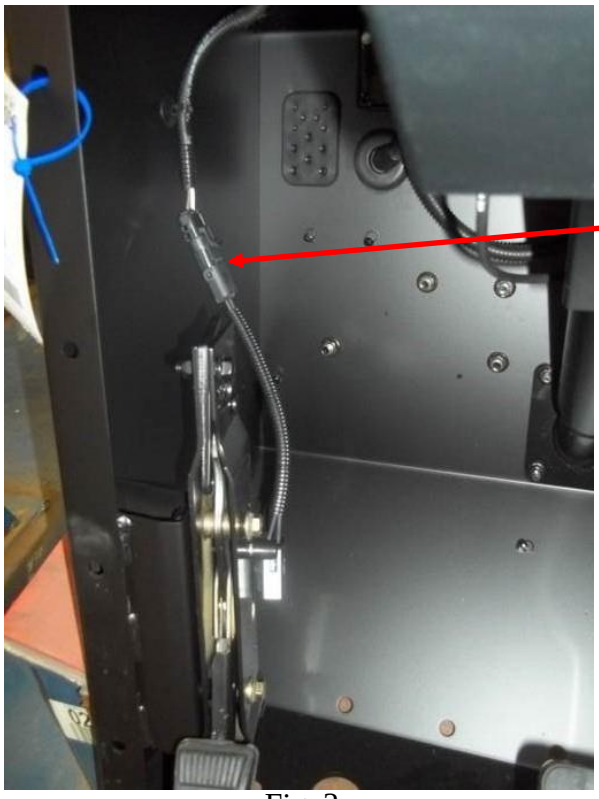

Brake Switch Connector

Fig. 3

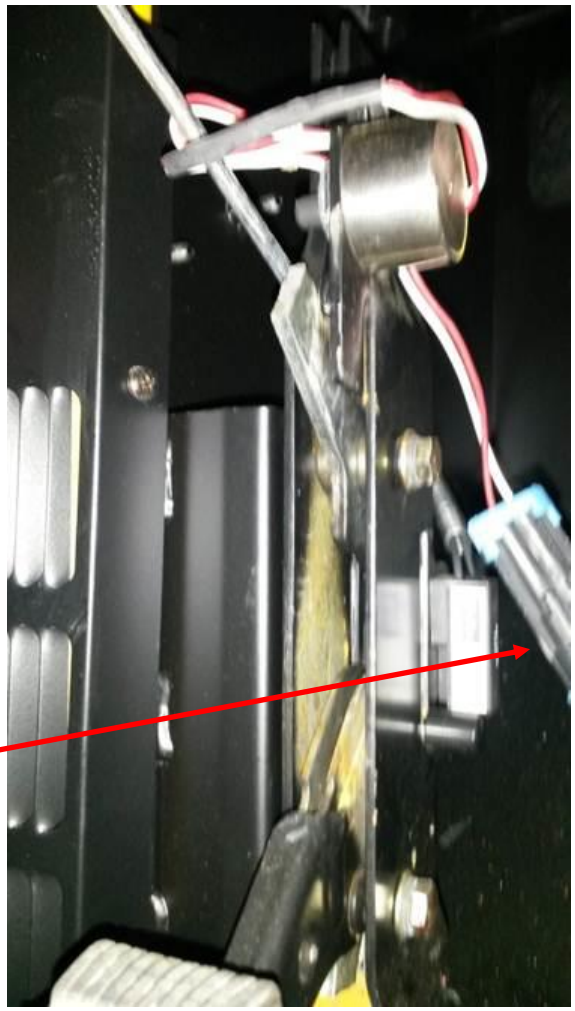

Solenoid connector (Park brake assembly with optional solenoid shown)

Fig. 4

Parking Brake Pedal Separation RECALL

6. Remove cotter pin, then the flat washer from release handle mechanism. (See Fig. 5)
   Note: Retain these parts for installation of new park brake lever assembly.

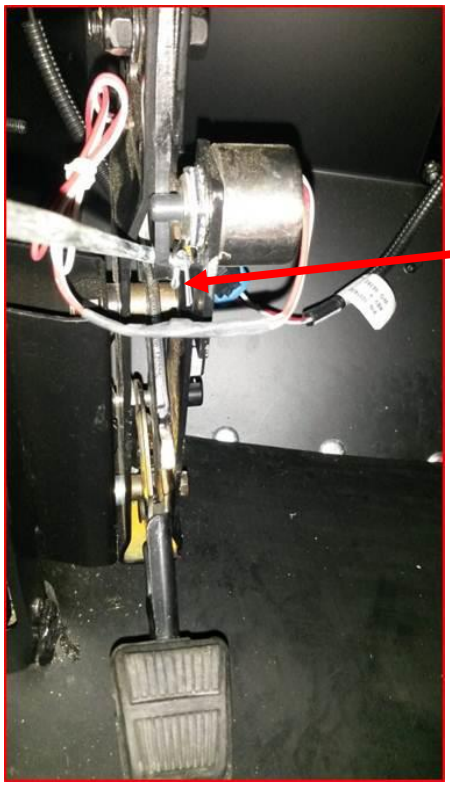

Fig. 5

7. Using a ½ inch socket and ratchet remove both mounting bolts (Fig. 6). Ensure spacer on lower mounting bolt between park brake assembly and panel and all washers are saved for reinstallation. (Fig. 7)

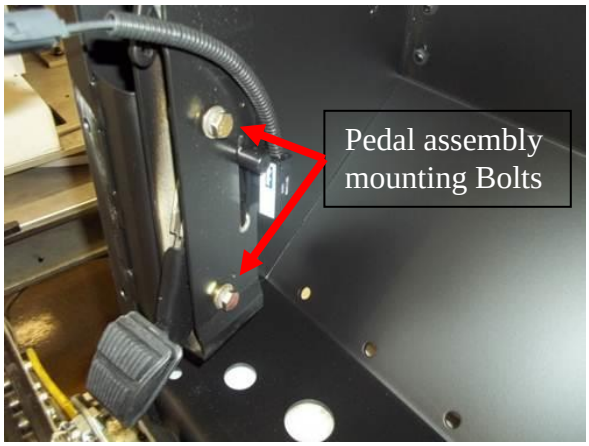

Fig. 6

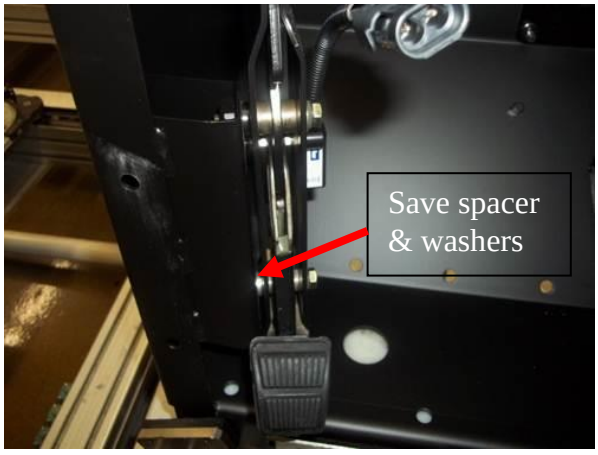

Fig. 7

Parking Brake Pedal Separation RECALL

8. Rotate cable in assembly so one of the clips is in line with opening. (Fig. 8)

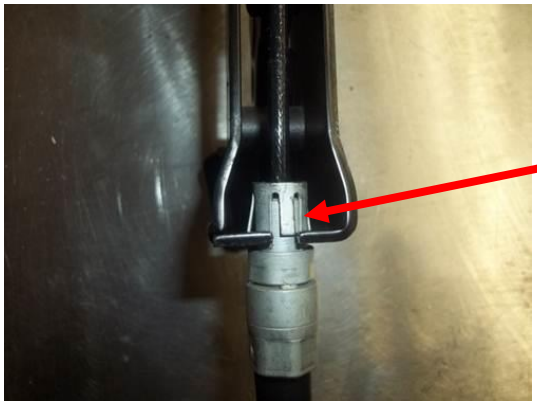

Cable clip shown
in line with opening

Fig. 8

9. A modified wrench (Fig. 9) will be provided with each order consisting of a 13mm wrench with a slot cut in the top side of the box end and machining the hex open to approximately .585 Dia. This will give enough clamp pressure to depress the locking tabs.

Modified wrench to aid in removing cable

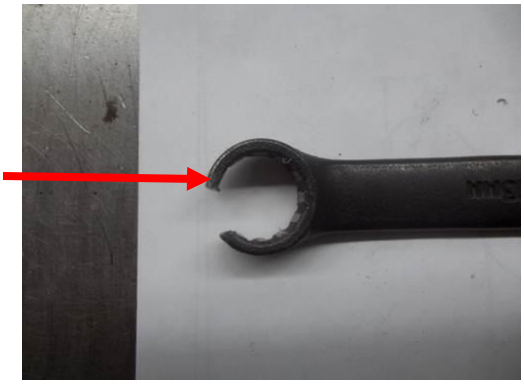

Fig. 9

10. Using the modified wrench, slide wrench down over cable connector. (Fig. 10)

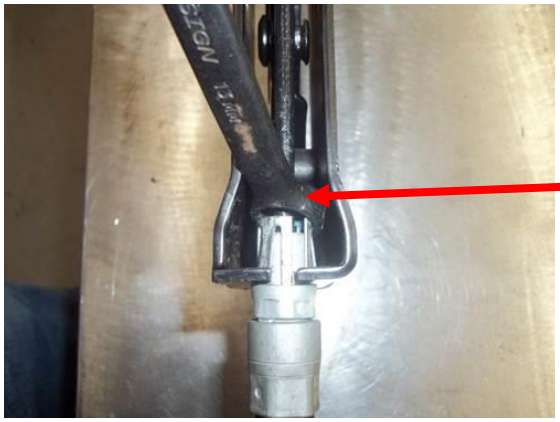

Wrench shown over
cable connector

Fig. 10

Parking Brake Pedal Separation RECALL

11. Slide modified wrench over connector (Fig. 11) to disengage the locking tabs.

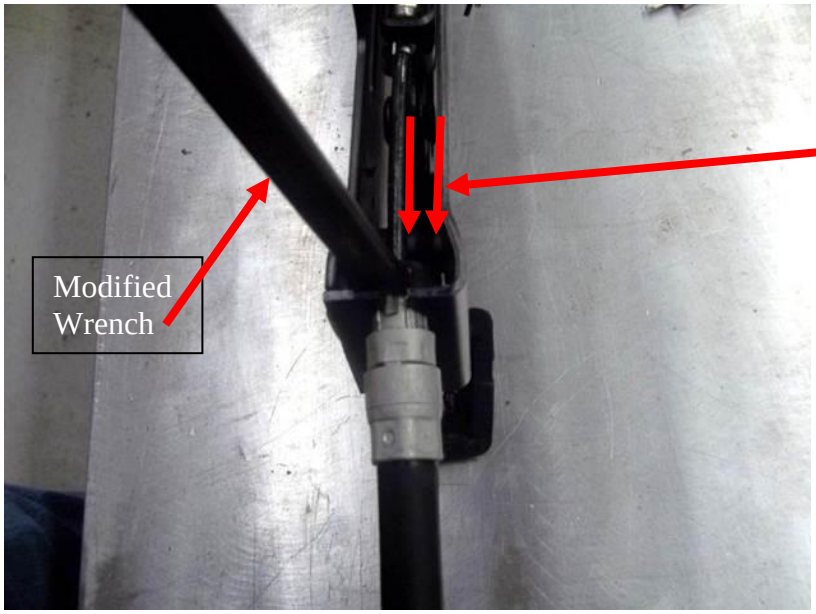

Slide wrench in direction as shown by arrows

Fig. 11

12. Once wrench is properly located, pull cable straight out to remove from assembly. (Fig. 12)

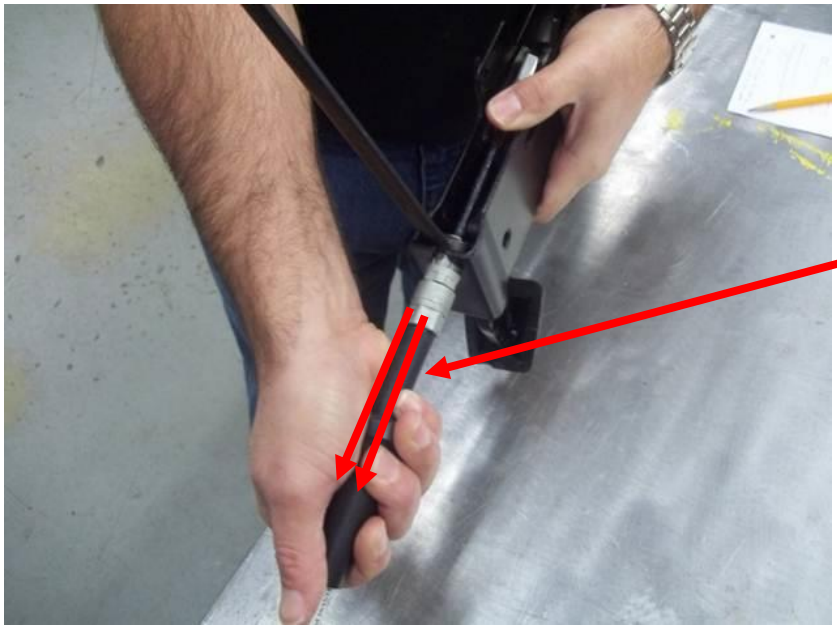

Pull cable in direction of arrows

Fig. 12

Parking Brake Pedal Separation RECALL

13. Once cable is disengaged from assembly, position pedal in a “full up” position. (Fig. 13)

Pedal in “full up” position

Fig. 13

14. Lift cable end from the retainer and separate from park brake lever assembly. (Fig. 14)

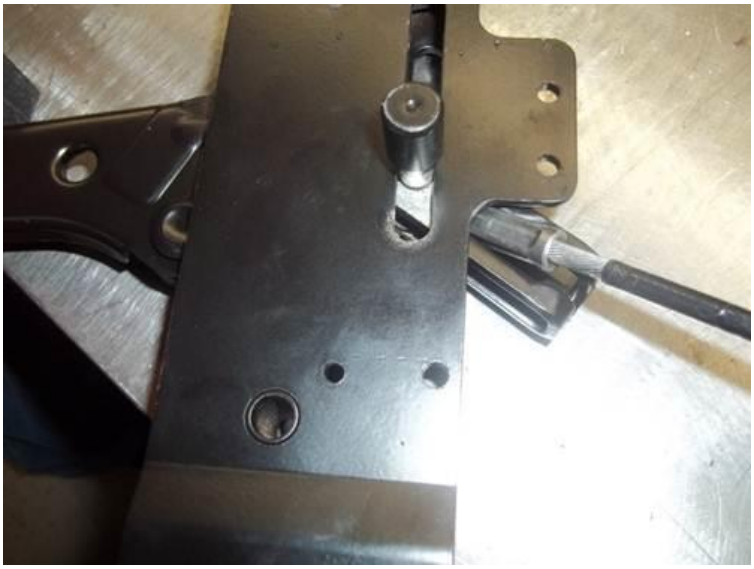

Fig. 14

Parking Brake Pedal Separation RECALL

15. Remove brake switch and solenoid (if equipped) from pedal assembly for reuse on new pedal assembly.

16. Installation is in reverse order. Ensure spacer (Fig. 15) retained in Step 6 is placed between box assembly and park brake to prevent damage to assembly when installing lower mounting bolt. Torque park brake assembly 5/16-18 mounting bolts to 150-200 in-lbs.

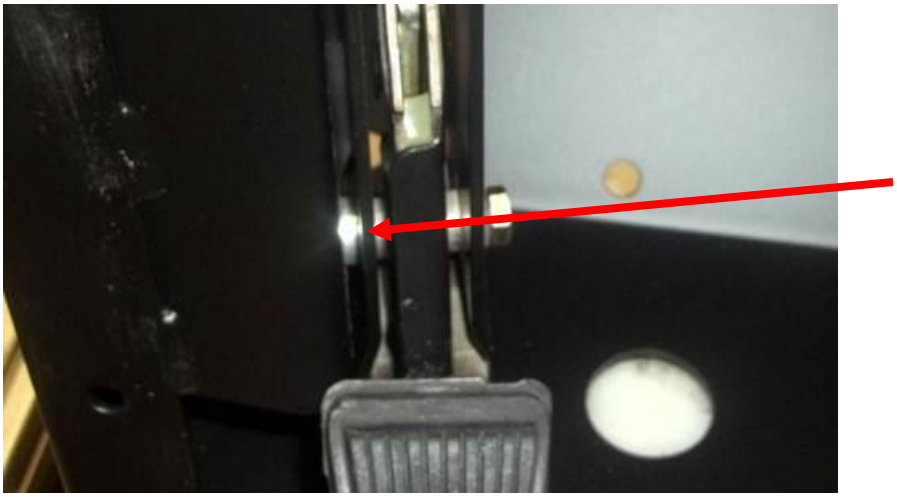

Fig 15

17. Be sure to reattach brake release lever.

18. Be sure to reattach cable at bellcrank on transmission.

19. See attached Page 9 for park brake adjustment instructions.

20. Prior to returning the vehicle to service, make certain all components and systems are restored to their proper operating condition.

21. Dispose of removed pedal assembly in accordance with all Federal, State and Local Regulations.

22. Remove chocks from wheels.

23. Return bus to service.

Parking Brake Pedal Separation RECALL

PARTS LIST:

Part No	Qty	Description
10020420	1	Pedal Assy, Brake, Park, Reinforced, *Without Solenoid*
10020421	1	Pedal Assy, Brake, Park, Reinforced, *With Solenoid*
NPN	1 per order	Wrench, 13mm, modified

Park brake pedal adjustment instructions
The parking brake should be adjusted so as to achieve following pounds force at the third "click" of the parking brake pedal.

120-130 pounds force—Vision **Cummins** engine equipped

110-120 pounds force---Vision **Ford** propane engine equipped

130-150 pounds force---All American front engine

Always apply the brake fully, pressing it down to achieve at minimum, a third "click" of its detent setting.

Two cable adjustment locations are provided:

- On right side of transmission housing, the outer cable is clamped to a bracket, which has three sets of mounting holes. Any of the three sets of holes can be used to achieve the proper working range for the finer adjustments.
- The clevis at the transmission end of the cable is threaded onto the swaged fitting of the inner cable. The effective cable play can be adjusted by:
    1. Loosen the clevis lock nut.
    2. Disconnect the clevis by removing its cotter pin and clevis pin.
    3. Turn the clevis to adjust the cable length. Be sure to always leave at least a few threads of the cable end fitting showing inside the clevis.
    4. Reattach the clevis using a new cotter pin and tighten the lock nut.

AGENDA

BLUE BIRD

R15YB

IMPORTANT SAFETY RECALL NOTICE

NHTSA RECALL NO. 15V059 SCHOOL BUS
NHTSA RECALL NO. 15V060 NON-SCHOOL BUS

DATE: **March 6, 2015**

TO: **U.S. DEALERS**

SUBJECT: **RECALL R15YB POTENTIAL FOR REAR ENGINE EXHAUST HANGERS FAILING**

This notice is sent to you in accordance with the requirements of the National Traffic and Motor Vehicle Safety Act.

Blue Bird Body Company has decided that a defect which relates to motor vehicle safety exists in certain 2011 through 2016 model year Blue Bird All American Rear Engine model school and non-school buses manufactured from June 5, 2010 through January 13, 2015, and equipped with optional Cummins diesel engines.

On the subject buses, the exhaust system hanger straps may fail under extreme conditions causing damage to the Selective Catalytic Reduction (SCR) and Diesel Particulate Filter (DPF) housings. This hanger failure may allow the exhaust system to partially or completely dislodge from some or all of its mounting points. If the housings were to fall onto the roadway, this could create a road hazard, increasing the risk of a crash. Blue Bird is conducting a recall to correct this defect.

To correct this defect, new exhaust hanger assemblies and exhaust support cables will be supplied to replace each of the four existing exhaust hanger assemblies.

If our records indicate buses subject to this recall were delivered in your service area, a printout identifying affected buses by body number and VIN is enclosed. **Dealers should verify correct owners and assure that complete mailing and shipping addresses are provided for each listed owner.**

If you have in your possession or have sold a bus that was purchased from another dealer that may be affected by this recall, please notify me at 478-822-2242 or lisa.hancock@blue-bird.com.

BLUE BIRD BODY COMPANY
P.O. Box 937 – 402 Blue Bird Blvd – Fort Valley, Georgia – (478) 825-2021

Labor time to perform Recall R15YB is 1.3 hours per bus.

Parts to complete Recall R15YB must be obtained from Blue Bird Recall Administration via e-mail. Please scan a copy of the completed yellow cover sheet and e-mail to campaignparts@blue-bird.com. Parts are anticipated to be available on or about March 30, 2015. Owners are being advised to contact their local dealer or to return the yellow cover sheet with the correct shipping address indicated to receive parts.

For repairs performed by 'the Blue Bird Dealer', the Dealer may submit 'campaign-type' claims in iWarranty for labor reimbursement. For repairs performed by 'other than the Blue Bird Dealer', the Owner's recall notification letter includes a reply sheet that the Owner can send to Blue Bird Recall Administration for reimbursement of labor costs to the Owner.

Federal law requires that any vehicle lessor receiving this recall notice must forward a copy of this notice to the lessee within ten days.

Dealers are reminded of their responsibilities under Section 154 of The National Traffic and Motor Vehicle Safety Act of 1991. Dealers are required to complete modifications on units in their inventory before delivering to the final owner. Reference Blue Bird Body Company Distributor Memo No. 42-92.

Questions regarding this recall campaign should be directed to me at (478) 822-2242 or lisa.hancock@blue-bird.com.

Sincerely,

Lisa Hancock

Lisa Hancock
Corporate Recall Administrator
Blue Bird Body Company

AGENDA

BLUE BIRD

R15YB

IMPORTANT SAFETY RECALL NOTICE

NHTSA RECALL NO. 15V059 SCHOOL BUS
NHTSA RECALL NO. 15V060 NON-SCHOOL BUS

DATE: March 6, 2015

Dear Blue Bird Owner:

This important safety recall notice applies to your bus(es) identified by both Blue Bird Body Number and Vehicle Identification Number (VIN) on the attached yellow cover sheet.

This notice is sent to you in accordance with the requirements of the National Traffic and Motor Vehicle Safety Act.

Blue Bird Body Company has decided that a defect which relates to motor vehicle safety exists in certain 2011 through 2016 model year Blue Bird All American Rear Engine model school and non-school buses manufactured from June 5, 2010 through January 13, 2015, and equipped with optional Cummins diesel engines.

On the subject buses, the exhaust system hanger straps may fail under extreme conditions causing damage to the Selective Catalytic Reduction (SCR) and Diesel Particulate Filter (DPF) housings. This hanger failure may allow the exhaust system to partially or completely dislodge from some or all of its mounting points. If the housings were to fall onto the roadway, this could create a road hazard, increasing the risk of a crash. Blue Bird is conducting a recall to correct this defect.

To correct this defect, new exhaust hanger assemblies and exhaust support cables will be supplied to replace each of the four existing exhaust hanger assemblies.

Your Blue Bird bus(es) affected by this recall are identified by both body serial number(s) and vehicle identification number (VIN) on the enclosed yellow and pink reply sheets. If you no longer own the subject bus(es), please complete the appropriate section of the yellow reply sheet and return to Blue Bird in the enclosed pink postage prepaid envelope.

Blue Bird recommends you contact your local or nearest Blue Bird Dealer to arrange for this recall to be performed. The Dealer can perform the repairs, or arrange for repairs to be performed by a service facility authorized by the Dealer. However, you may elect to perform this recall yourself or pay another independent repair facility to perform this recall. A qualified technician should perform this recall.

If you elect to perform this recall yourself or pay another independent repair facility to perform this recall, complete and submit the Pink Owner's Recall Reply Sheet provided. The Reply Sheet includes a section for the owner to request reimbursement of the owner's labor or to request

BLUE BIRD BODY COMPANY
P.O. Box 937 – 402 Blue Bird Blvd – Fort Valley, Georgia – (478) 825-2021

reimbursement for a labor invoice paid by the owner to an independent repair facility. The Owner's Recall Reply Sheet can be mailed in the postage prepaid envelope provided, faxed to 478-822-2467, or email copies of the documents and supporting documents to lisa.hancock@blue-bird.com.

Of course, if your Blue Bird Dealer performs the recall or arranged for repairs to be performed by a service facility authorized by the Dealer, the Blue Bird Dealer will notify Blue Bird about the completion of the recall.

To receive replacement parts for Recall R15YB, sign and return the enclosed yellow reply sheet to Blue Bird in the pink, self-addressed, postage prepaid envelope. Be sure to provide a valid shipping address as UPS does not deliver to P.O. Boxes. You should retain a copy of the reply sheet for your records.

Labor time to perform recall R15YB is 1.3 hours.

If the modifications directed by this notification were performed on your bus prior to the receipt of this recall notification, complete and sign the recall reply sheet and attach a copy of the work order/invoice. Mail the documents in the **pink** self-addressed postage paid envelope included with the recall notification to Blue Bird for warranty consideration. Reimbursements will be made in accordance with the requirements of the National Highway Transportation Safety Act, Title 49 Code of Federal Regulations, Parts 573 and 577.

Federal law requires that any vehicle lessor receiving this recall notice must forward a copy of this notice to the lessee within ten days.

If Blue Bird Body Company should fail to or is unable to remedy this condition without charge to you, you may contact:

ADMINISTRATOR
NATIONAL HIGHWAY TRAFFIC SAFETY ADMINISTRATION
1200 NEW JERSEY AVENUE, SE
WASHINGTON, D.C. 20590

Or, you may call The National Highway Traffic Safety Administration toll free at:

1-888-327-4236 TTY 1-800-424-9153 Or, go to: HTTP://WWW.SAFERCAR.GOV

Questions regarding this recall campaign should be directed to me at (478) 822-2242 or lisa.hancock@blue-bird.com.

Sincerely,

Lisa Hancock

Lisa Hancock
Corporate Recall Administrator
Blue Bird Body Company

AGENDA

BLUE BIRD

Potential for Rear Engine Exhaust Hangers Failing

RECALL

Models Affected: **Certain Rear Engine All American Buses with a Selective Catalytic Reduction (SCR) and Diesel Particulate Filter (DPF).**

ISSUE

The rubber SCR and DPF hanger strap assembly may fail under extreme conditions causing extensive damage to the SCR and DPF modules.

CORRECTIVE ACTION

Install new exhaust hanger strap assembly 10040843 (4 Places); and exhaust support cables, 10040841.

R 1 5 Y B

PROCEDURE

WARNING:
Always follow all Federal, State, Local, and Shop safety standards and use proper safety equipment, and thoroughly read and understand all instructions before performing these procedures.

CAUTION:
Allow exhaust system to cool prior to performing these procedures to prevent the risk of severe burns.

1. Park the bus on a level surface, apply parking brake, turn off engine, remove ignition key, and chock wheels.

2. Locate the four muffler hanger strap assemblies supporting the SCR and DPF at the rear of the bus.

   Note: Inspect welded Main Support Brackets for damage (bent brackets or cracked welds) before installing new muffler hanger bracket assemblies. Replace, as needed.

3. Support the SCR and DPF, and replace muffler hanger strap assemblies (4 Places) with new assemblies 10040843 and add two exhaust support cables 10040841, two bolts 00803171, two nuts 00543934, and two nuts 02171809 per exhaust hanger strap assembly. Drill out slots at eight (8) mounting locations to 13/32 inch diameter. Do not reuse old nuts.

   Torque upper 3/8" nut that comes with new bracket assembly 10040843 to 72 – 78 in-lb.

4. Torque lower 3/8" nuts (00543934 and 02171809) to 29 - 33 lb-ft.
   See Sheet 2 for illustration.

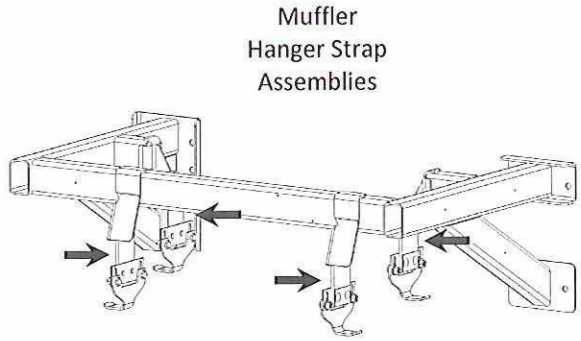

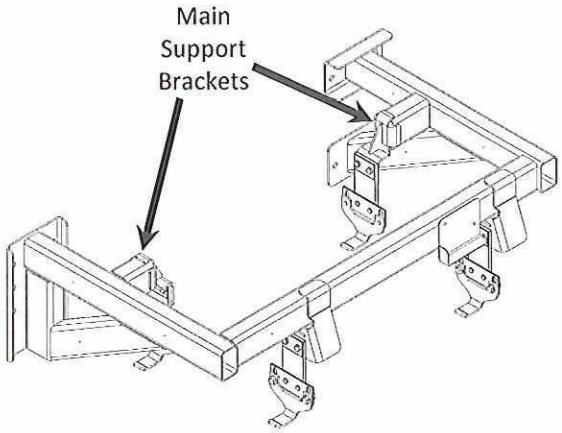

BLUE BIRD

Potential for Rear Engine Exhaust Hangers Failing

RECALL

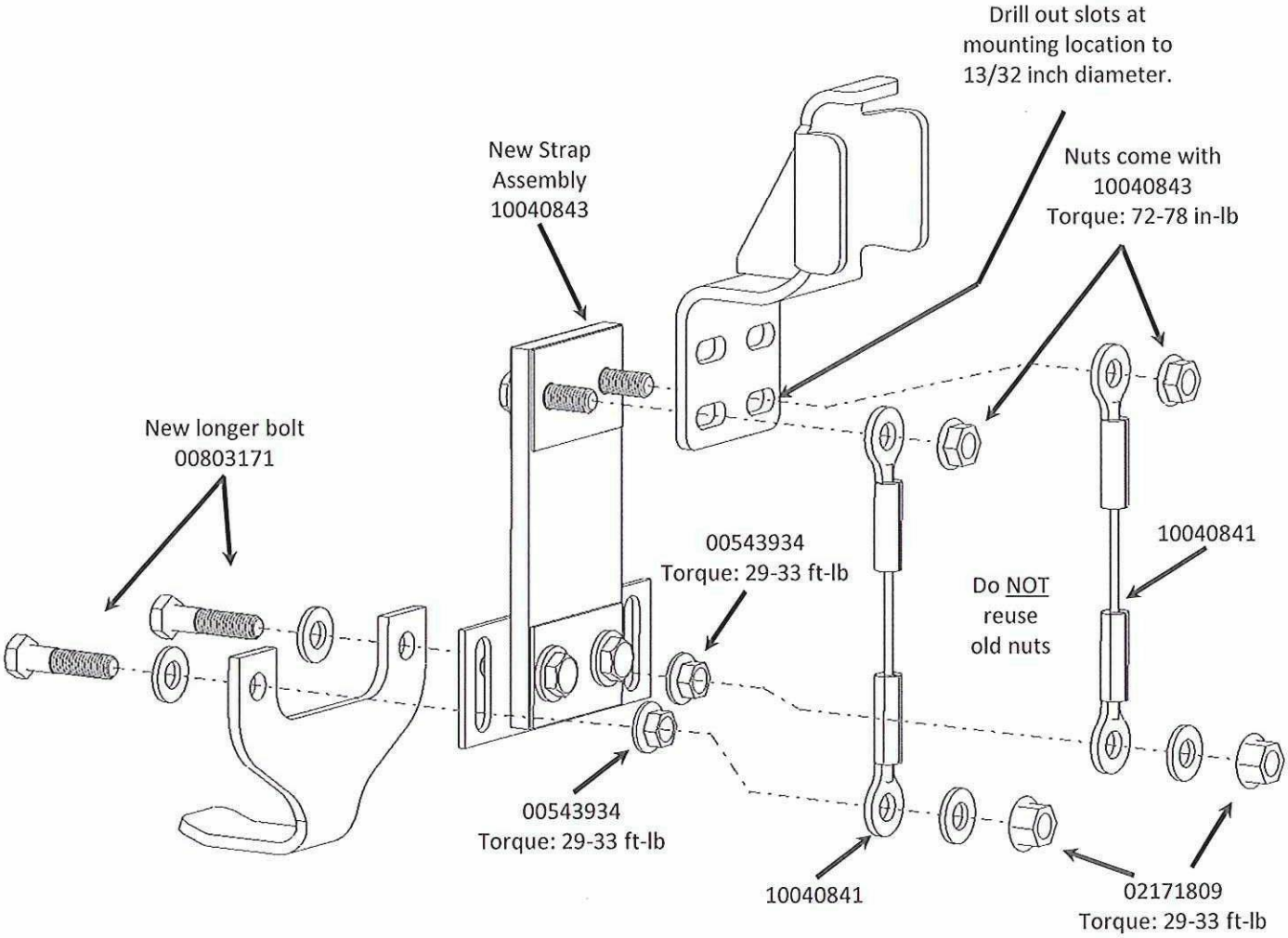

Parts List		
Part #	**Description**	**Qty**
10040841	CABLE ASSY, SUPPORT,5.50",EXHAUST,2014 T3RE	8
10040843	BRACKET ASSY,EXH,HANGER,ADJUSTABLE,5.63	4
02171809	NUT,HEX HD,3/8-16,SM FLG LK	8
00543934	NUT,HEX HD,3/8-16,ZINC,LG FLG LK,YEL ZNDICH	8
00803171	CAPSCREW,HEXHD,3/8-16NCX1-1/2,GR8,YELZNDICH	8

Note: Re-use existing washers.

R15YB

AGENDA

CE White Quasi-Static Passenger Seat Gusset Fasteners

RECALL

Models Affected: Vision and All American with Gusset Mounted CE White Quasi-Static Seats

ISSUE

On some affected buses, incorrect fasteners may have been used to secure the seat gusset reinforcement to the wall, resulting in a non-compliance with FMVSS 210.

CORRECTIVE ACTION

Inspect the seat mounting fasteners securing the gusset reinforcement to the wall. If a fastener is incorrect, install additional seat gusset reinforcement bracket.

PROCEDURE

WARNING: Always follow all Federal, State, Local and Shop safety standards and use proper safety equipment, and thoroughly read and understand all instructions before performing these procedures.

NOTE: This procedure outlines the process for one seat. This process must be followed for every Quasi-Static (QS) 3-point seat belt, seat installed in the bus.

Inspect for correct mounting fasteners.

Locate the seat gusset reinforcement bracket for each Quasi-Static, 3-point seat. It will be fastened to the wall, immediately below the seat ledge, with at least two (2) grade 8 bolts. Visually check the bolts for six (6) dashed markings on the head of each bolt as referenced in Figure 1. If these markings are not present or there are other markings, perform the remaining instructions.

Figure 1

Gusset Reinforcement Bracket, wall mounted, under seat ledge
NOTE:
This bracket is ONLY installed on Quasi-Static 3-point seat belt seats

R15YC

--RECALL CAMPAIGN--

CE White Quasi-Static Passenger Seat Gusset Fasteners

RECALL

Repair procedure for all Quasi-Static Seat (QS) with gusset/floor mounting or gusset/track mounting.

1. Remove and retain the two rear most mounting fasteners attaching the seat to the gusset. Reference Figure 2 for location of the two fasteners.
2. Place the new reinforcement bracket (10041875) into position and reinstall the two fasteners. Reference Figure 3 and Figure 4 for bracket location. Tighten fasteners snugly but do not torque.
3. Using a 25/64" drill bit (obtain locally), locate the rear hole on reinforcement bracket 10041875. Using this hole as a guide, drill thru the gusset and lower seat gusset reinforcement bracket.
4. Clean away metal shavings and install new 3/8" capscrew (00803213) and nut (02171809). Reference Figure 4 for an installed reinforcement bracket.
5. Torque new 3/8" nut (02171809) to 29-33 ft. lbs.
6. Torque two (2) existing 5/16" nut(s) to 12-13 ft. lbs.

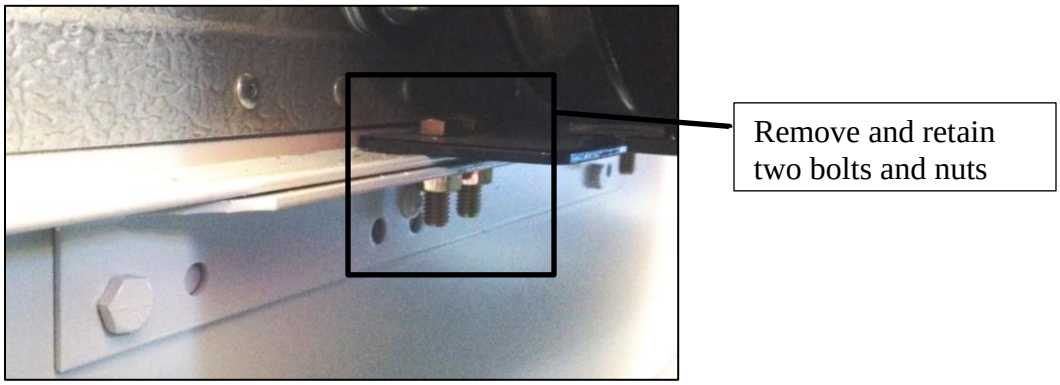

Figure 2

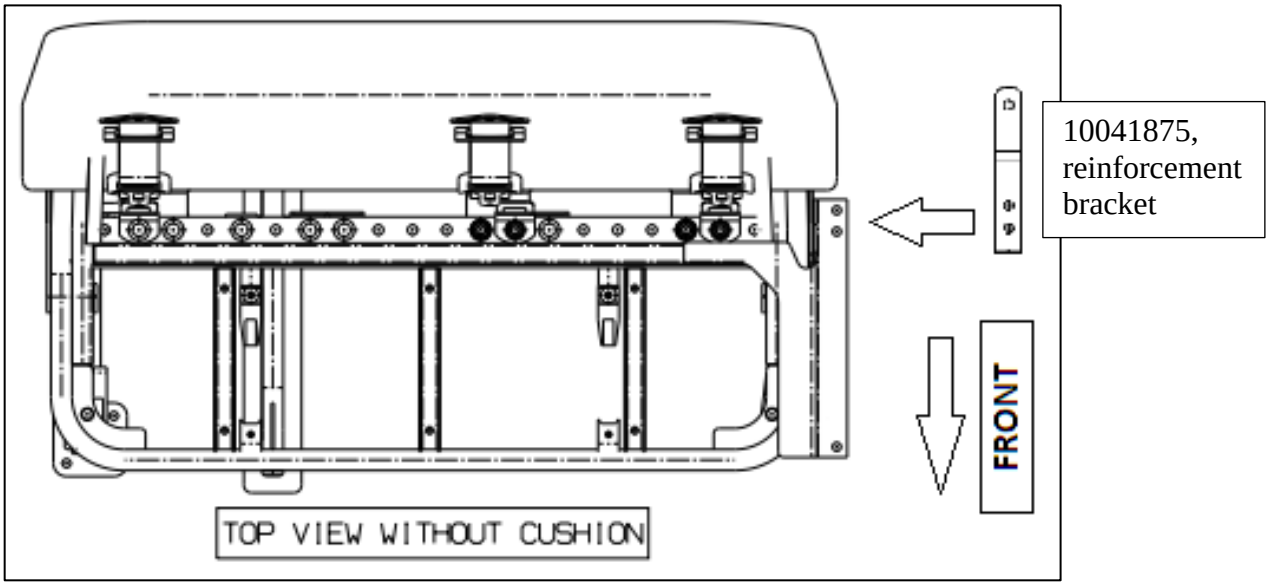

Figure 3

BLUE BIRD

RECALL

CE White Quasi-Static Passenger Seat Gusset Fasteners

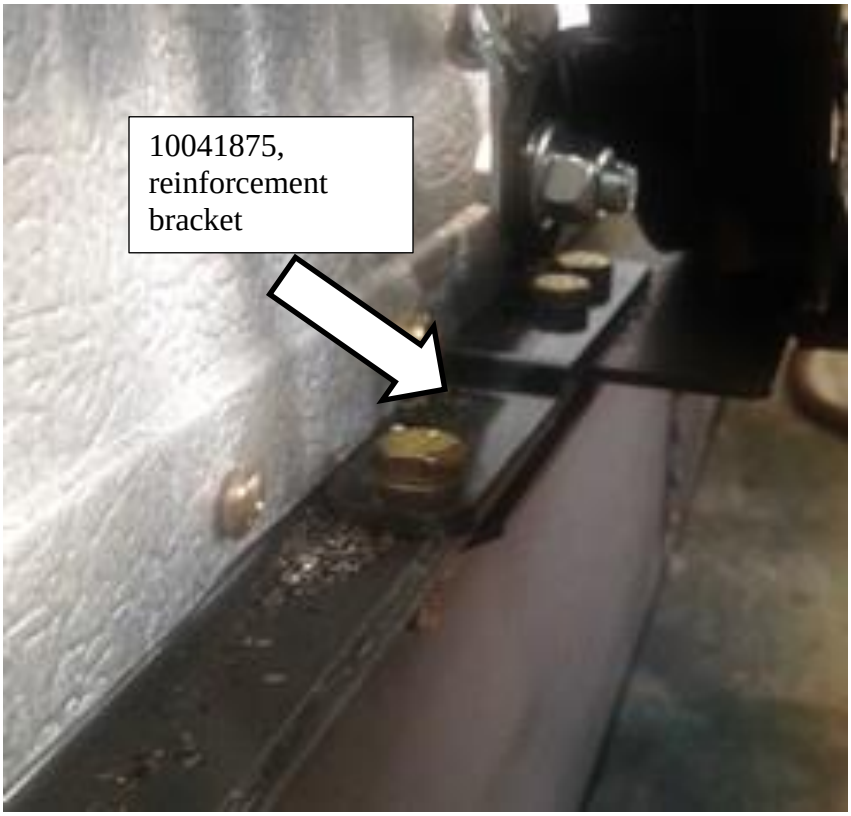

Figure 4

REMINDER: Re-torque all seat bolts per your maintenance schedule located in your owner's manual or service manual.

Parts list per seat

Part Number	Description	Quantity	Torque Value
10041875	Bracket, Mounting, CEW QS Seat	1 per seat	N/A
00803213	Capscrew, 3/8-16x1 ¼" GR8	1 per seat	N/A
02171809	Nut, Hex HD, 3/8-16, SM FLG	1 per seat	29-33 ft. lb.

AGENDA

BLUE BIRD

February 13, 2014 Revision A

To: Affected North American Dealers

Subject: Service Bulletin S14XA Inspect Transmission Harness Routing and Cooling Hose Connections

Models Affected: 2013-2015 Model Year Vision (BBCV) Models Equipped with Ford Propane Engines

Bulletin Duration: One (1) Year from Date of Issue

Overview

The subject buses equipped with Ford propane engines must have the transmission harness inspected for proper routing and the transmission oil cooler hose connections inspected for correct connection. Service Bulletin S14XA provides instructions for inspecting the harness routing and the cooler hose connections.

Affected Units

A printout is attached of the buses in your territory that are affected by this bulletin. Service Bulletin S14XA will be mailed to all affected owners on record.

Time Allowance

Time allowed for inspecting and correcting the transmission harness routing and the transmission cooler hose connections per instructions for S14XA is 0.4hrs (24) minutes per bus.

Repair Parts

Parts are not required to perform Service Bulletin S14XA.

Labor Reimbursement

Campaign-type claims may be submitted online via Blue Bird iWarranty for labor reimbursement.

Bulletin Duration

This Service Bulletin ends one (1) year from the date of issue.

Repair Facility

Owners are being advised to contact their dealer for assistance, if needed.

BLUE BIRD BODY COMPANY
P.O. Box 937 – 402 Blue Bird Blvd – Fort Valley, Georgia – (478) 825-2021

AGENDA

BLUE BIRD

Questions

Questions regarding this bulletin should be directed to your Blue Bird Field Service Representative.

Sincerely,

Bill Coleman
Engineering Services
478-822-2242

AGENDA

BLUE BIRD

February 13, 2014

To:	Select Blue Bird Customers
Subject:	Service Bulletin S14XA Inspect Transmission Harness Routing and Cooling Hose Connections
Models Affected:	2013-2015 Model Year Vision (BBCV) Models Equipped with Ford Propane Engines
Bulletin Duration:	One (1) Year from Date of Issue

Overview
The subject buses equipped with Ford propane engines must have the transmission harness inspected for proper routing and the transmission oil cooler hose connections inspected for correct connection. Service Bulletin S14XA provides instructions for inspecting the harness routing and the cooler hose connections.

Affected Units
The buses in your fleet that are affected by this bulletin are identified by Blue Bird body serial number(s) and VIN(s) on the enclosed cover sheet.

Time Allowance
Time allowed for inspecting and correcting the transmission harness routing and the transmission cooler hose connections per instructions for S14XA is 0.4hrs (24) minutes per bus.

Repair Parts
Parts are not required to perform Service Bulletin S14XA.

Labor Reimbursement
If you performed Service Bulletin S14XA yourself or had an outside repair facility perform this bulletin you may send a copy of the work order/invoice for completed labor to your Blue Bird Dealer for reimbursement.

Bulletin Duration
This Service Bulletin ends one (1) year from the date of issue.

Repair Facility
We encourage you to contact your Blue Bird dealer to arrange to have this Service Bulletin performed. However, you may have the option to perform this Service Bulletin yourself or have a qualified repair facility convenient to you perform this work. A qualified technician must perform work required under this bulletin.

BLUE BIRD BODY COMPANY
P.O. Box 937 – 402 Blue Bird Blvd – Fort Valley, Georgia – (478) 825-2021

AGENDA

BLUE BIRD

Questions

Questions regarding this bulletin should be directed to your Blue Bird Dealer.

Sincerely,

Bill Coleman

Bill Coleman
Engineering Services
478-822-2242

AGENDA

BBCV Ford Transmission Inspect Harness Routing – Oil Cooler Hose Connection

BULLETIN

Models Affected: 2013-2015 BBCV Visions with Ford Propane Engines

ISSUE

Transmission harness may not be properly routed and secured. Transmission oil cooler hose may not be properly connected.

CORRECTIVE ACTION

Inspect and, if required, relocate and secure transmission harness. Check for proper connection and installation of transmission oil cooler hoses to transmission cooler and transmission tube assembly.

S14XA

PROCEDURE

WARNING: Always follow all Federal, State, Local and Shop safety standards and use proper safety equipment, and thoroughly read and understand all instructions before performing these procedures.

1. Park bus on level surface, apply parking brake, turn off ignition and remove key.
2. Chock wheels
3. Caution, engine, transmission, and exhaust manifold **MUST be at ambient** temperature before proceeding.
4. Inspect transmission harness routing to insure no contact with exhaust manifold or exhaust pipes. Note: Check both sides of engine. See photos and illustration of correct harness routing.
5. If required, reroute and secure harness as shown to prevent contact with engine exhaust manifold or exhaust pipes.

SERVICE BULLETIN

BBCV Ford Transmission Inspect Harness Routing – Oil Cooler Hose Connection

BULLETIN

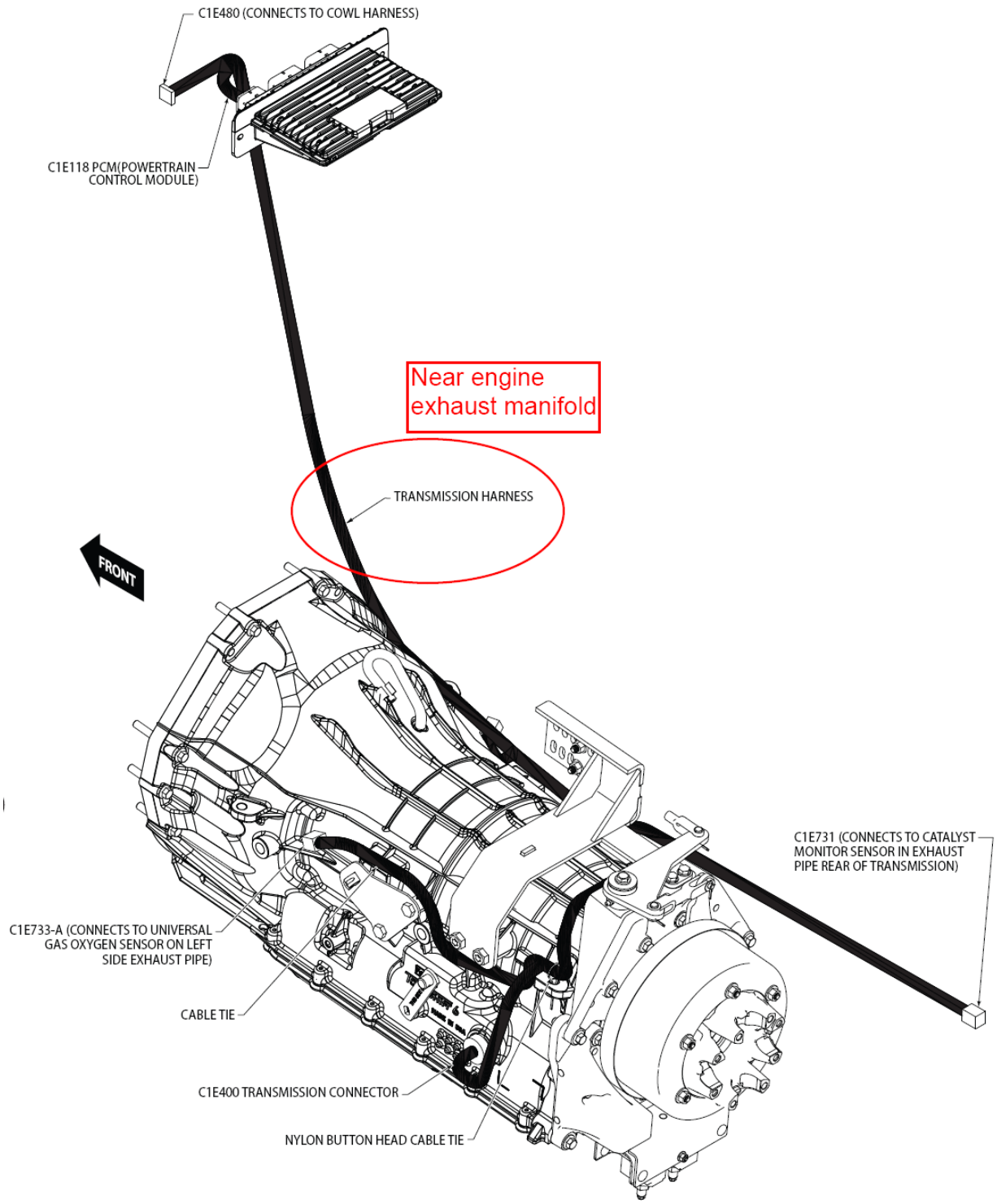

BBCV Ford Transmission Inspect Harness Routing – Oil Cooler Hose Connection

BULLETIN

Note: Insure harness is routed and secured to maintain a minimum 2” clearance away from exhaust. See circled areas of photo below.

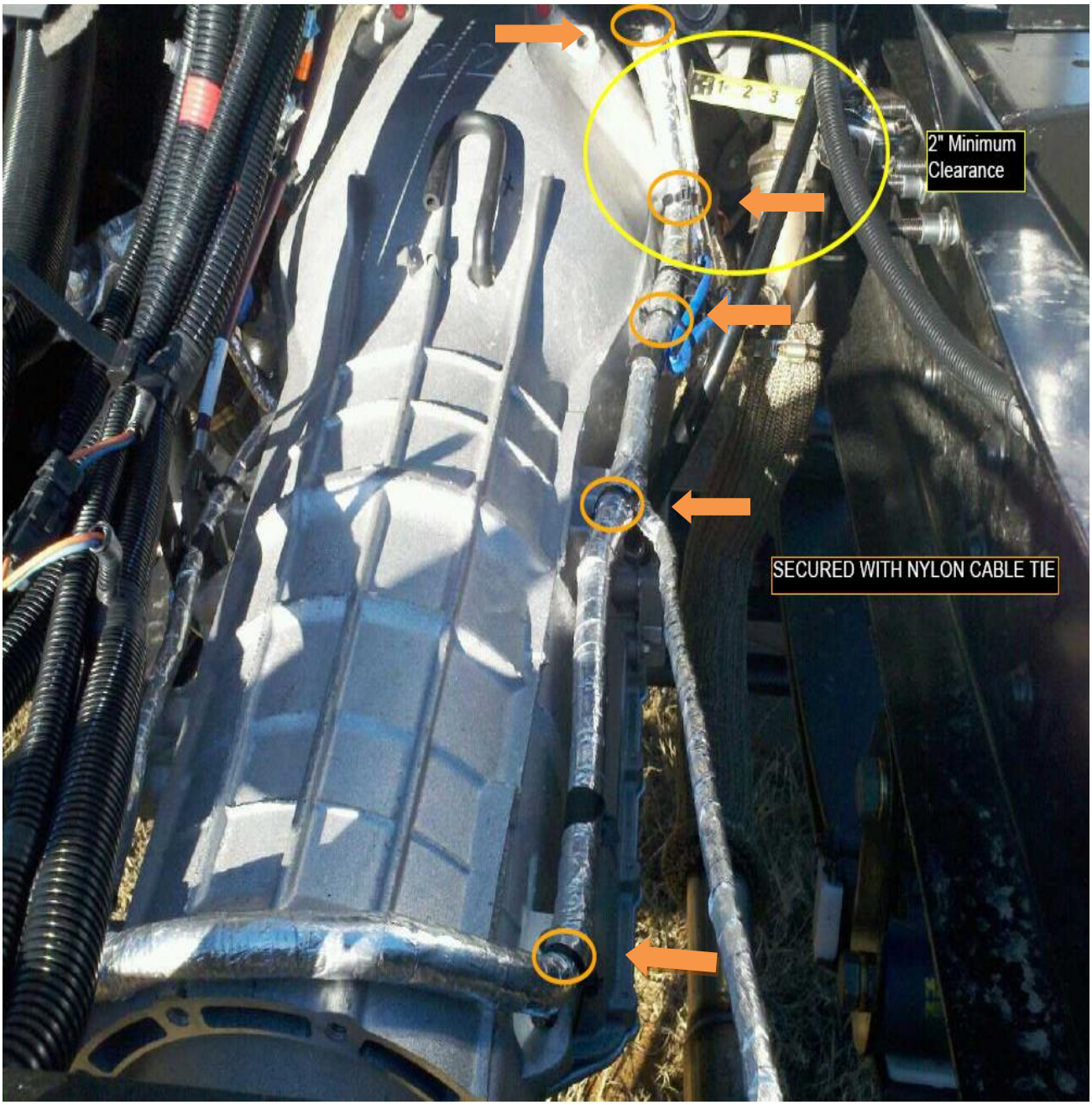

BBCV Ford Transmission Inspect Harness Routing – Oil Cooler Hose Connection

BULLETIN

1. Check for proper connection of each transmission hose where they connect to the transmission cooler and tube assembly (see circled connections in figure 1). Refer to page 5 for verification procedure on "push to connect" hoses.
2. Check for proper orientation of "P" clamp securing the transmission hose to the bottom of the radiator shroud. If clamp is not oriented per figure 1, remove clamp and re-install as shown in figure 1 below.
3. Check transmission fluid level per instructions in the Service Manual.
4. Remove wheel chocks.
5. Place bus back into service.

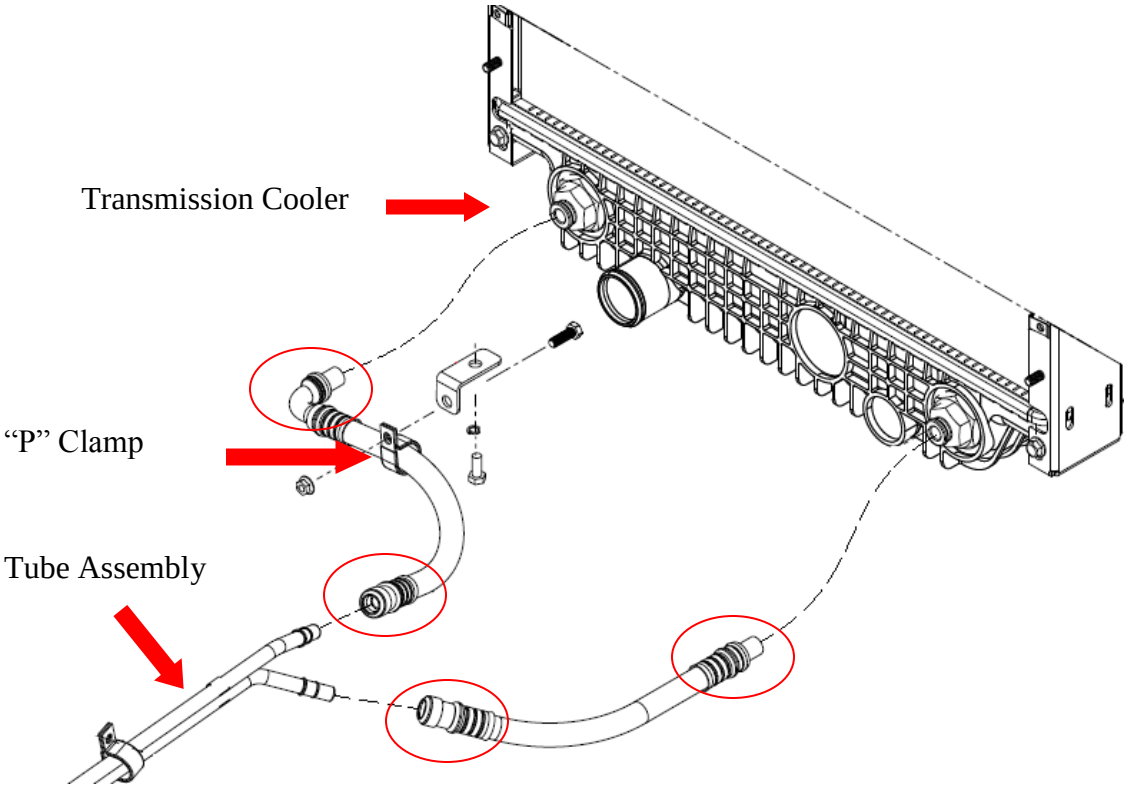

Figure 1

BBCV Ford Transmission Inspect Harness Routing – Oil Cooler Hose Connection

BULLETIN

Align the STC fitting on the hose assembly with the STC connector. Push the hose fitting into the mating connector until you feel a definite snap and a solid stop.

Correct Method

Incorrect Method

Do not hold sleeve during assembly

Verify that the STC connection has been made successfully by pulling on the connection to make sure that the male connector has been properly inserted into female connector. Be sure that the direction of pull is parallel to the axis of the STC connection.

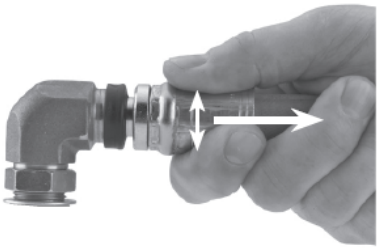

Correct Method

Pulling parallel to the connections axis

Incorrect Method

Pulling at an angle to connections axis

Correct Method

Pulling on the fitting such that the motion is parallel to the connections axis.

Incorrect Method

Subjecting the connection to a sideload by pulling on the hose.

AGENDA

BLUE BIRD

July 29, 2014
Updated: January 13, 2015

To:	Affected North American Dealers
Subject:	Service Bulletin S14XG 8D Battery Cables Routing
Models Affected:	2010 through 2015 Model Year All American Front and Rear Engine Models Equipped with Optional 8 D Batteries
Bulletin Duration:	One (1) Year from Date of Issue

Overview

On buses with Feature 40142-04 8 D batteries, the positive battery cable may come in contact with the battery compartment door reinforcement when door is closed. Service Bulletin S14XG provides instructions for inspecting and, if needed, for rerouting the battery cables to prevent contact with the compartment door reinforcement.

Affected Units

A printout is attached of the buses in your territory that are affected by this bulletin. Service Bulletin S14XG will be mailed to all owners on record.

Time Allowance

Time allowed to inspect the positive cable for contact with compartment door reinforcement is 0.1 hours per bus.

Time allowed for inspecting the positive battery cable for contact with compartment door reinforcement and rerouting the battery cables is 0.3 hours per bus.

Repair Parts

Replacement positive battery cables must be ordered directly through Blue Bird Service Parts. Parts are available to be ordered.

Labor Reimbursement

Warranty applications for labor reimbursement may be submitted to Blue Bird iWarranty (Campaigns/Claims).

Bulletin Duration

This Service Bulletin ends one (1) year from the date of issue.

BLUE BIRD BODY COMPANY
P.O. Box 937 – 402 Blue Bird Blvd – Fort Valley, Georgia – (478) 825-2021

AGENDA

Repair Facility
Owners are being advised to contact their dealer for assistance, if needed.

Questions
Questions regarding this bulletin should be directed to your Blue Bird Field Service Representative.

Sincerely,

Bill Coleman
Engineering Services
478-822-2242

AGENDA

BLUE BIRD

October 15, 2014

To:	Affected North American Dealers
Subject:	Service Bulletin S14XP National Driver's Seat Shock Lower Mounting Tab Inspection
Models Affected:	2010-2013 Model Year All American and Vision Models
Bulletin Duration:	One (1) Year from Date of Issue

Overview

The standard National pedestal driver's seat, in some instances, when exposed to extreme input loads from harsh road conditions and/or higher occupant weight, the shock lower mounting tab could weaken and possibly fatigue. This fatigue could lead to the tabs bending out of design specification and possibly result in failure. The driver's seat shock tab should be inspected and, if found out of tolerance, a reinforcement kit should be installed.

See attached instructions from CVG, Inc. for inspection procedure and reinforcement service kit installation instructions.

Affected Units

A printout of the buses in your territory that are affected by this bulletin will be provided. Service Bulletin S14XP will be mailed to all affected owners on record.

Time Allowance

Time allowed to inspect driver's seat shock lower mounting tab for deformation is 0.1hrs (6) minutes per bus.

Time allowed to inspect driver's seat shock lower mounting tab for deformation and install reinforcing kit, if needed, is 0.3hrs (18) minutes per bus.

Repair Parts

If needed, seat shock tab reinforcement service kits (NSC Seat Part # 10877) for Service Bulletin S14XP will be provided at "No Charge" to dealers and owners. Blue Bird Service Engineering will provide a nominal amount of the seat shock tab reinforcement service kits to each dealer for their stock. Dealers must send an email to bill.coleman@blue-bird.com at Blue Bird Service Engineering to request an initial quantity of seat shock tab reinforcing kits. Parts are available in limited quantities.

BLUE BIRD BODY COMPANY
P.O. Box 937 – 402 Blue Bird Blvd – Fort Valley, Georgia – (478) 825-2021

AGENDA

Additional "No Charge" seat shock tab reinforcement service kits must also be ordered through Blue Bird Service Engineering. Seat shock tab reinforcing service kits will not be available through Parts Sales.

Labor Reimbursement
Warranty applications for labor reimbursement for S14XP may be submitted to Blue Bird iWarranty (Campaigns/Claims).

Bulletin Duration
This Service Bulletin ends one (1) year from date of issue of Service Bulletin S14XP.

Repair Facility
Owners are being advised to contact their Blue Bird dealer for assistance, if needed.

Questions
Questions regarding Service Bulletin S14XP should be directed to your Blue Bird Field Service Representative.

Sincerely,

Bill Coleman

Bill Coleman
Engineering Services
478-822-2242

AGENDA

BLUE BIRD

October 15, 2014

To:	Select Blue Bird Customers
Subject:	Service Bulletin S14XP National Driver's Seat Shock Lower Mounting Tab Inspection
Models Affected:	2010-2013 Model Year All American and Vision Models
Bulletin Duration:	One (1) Year from Date of Issue

Overview

The standard National pedestal driver's seat, in some instances, when exposed to extreme input loads from harsh road conditions and/or higher occupant weight, the shock lower mounting tab could weaken and possibly fatigue. This fatigue could lead to the tabs bending out of design specification and possibly result in failure. The driver's seat shock tab should be inspected and, if found out of tolerance, a reinforcement kit should be installed.

Service Bulletin S14XP provides instructions from CVG, Inc. for inspecting the driver's seat shock mounting tab and, if necessary, installation of a seat shock tab reinforcement service kit.

Affected Units

The buses in your fleet that are affected by Service Bulletin S14XP are identified by Blue Bird body serial number(s) on the enclosed cover sheet.

Time Allowance

Time allowed to inspect driver's seat shock lower mounting tab for deformation is 0.1hrs (6) minutes per bus.

Time allowed to inspect driver's seat shock lower mounting tab for deformation and install a seat shock tab reinforcement service kit, if needed, is 0.3hrs (18) minutes per bus.

Repair Parts

Seat shock tab reinforcement service kits (NSC Seat Part # 10877) for Service Bulletin S14XP will be provided at "No Charge" to you. Service kits must be ordered from your Blue Bird dealer. Parts are available in limited quantities.

BLUE BIRD BODY COMPANY
P.O. Box 937 – 402 Blue Bird Blvd – Fort Valley, Georgia – (478) 825-2021

AGENDA

Labor Reimbursement

If you perform Service Bulletin S14XP yourself or have an outside repair facility perform this bulletin you may submit claims for labor reimbursement to your Blue Bird dealer. Parts are provided at "No Charge".

Bulletin Duration

This Service Bulletin S14XP ends one (1) year from the date of issue.

Repair Facility

We encourage you to contact your Blue Bird dealer to arrange to have Service Bulletin S14XP performed. However, you may have the option to perform Service Bulletin S14XP yourself or have a qualified repair facility convenient to you perform this work. A qualified technician must perform work required under this bulletin.

Questions

Questions regarding Service Bulletin S14XP should be directed to your Blue Bird Dealer.

Sincerely,

Bill Coleman
Engineering Services
478-822-2242

AGENDA

Bergstrom
Climate Control Systems

Blue Bird Service Bulletin S14XT All American Model Front Heater/Defroster Jumper Installation Instructions

- Remove trim around the heater unit

- Remove screws from heater cover panel & remove panel

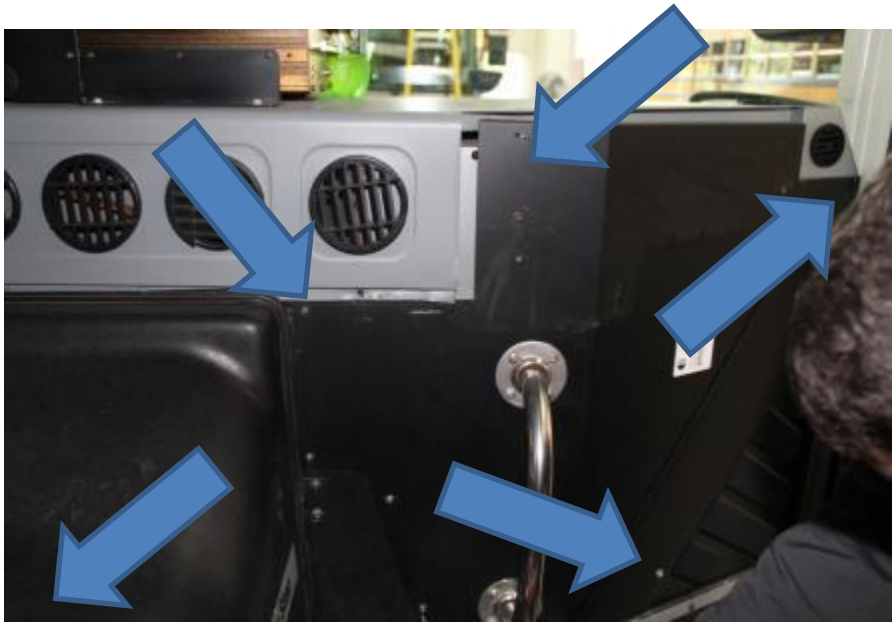

- Remove screws from heater panel

- Remove heater panel

1. Gain access to blower motor connector
2. Disconnect Red wire

- Remove connector from resistor block

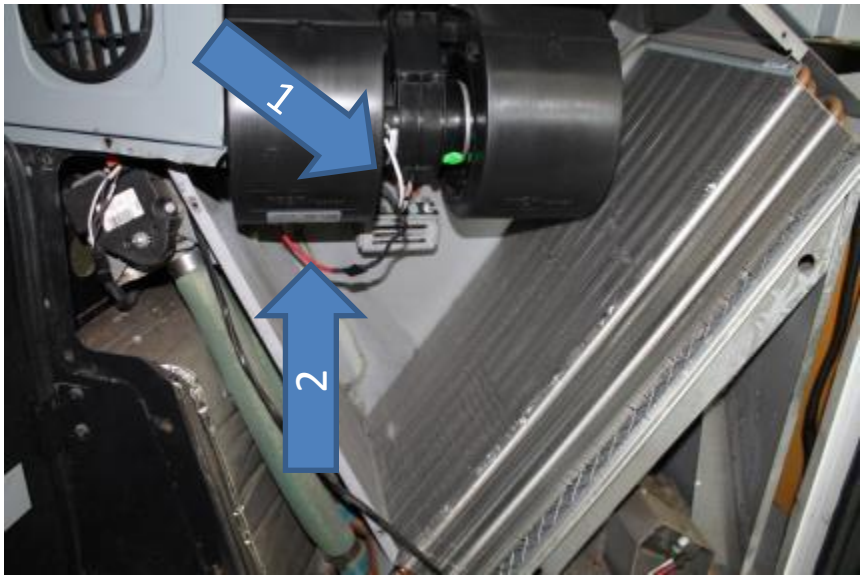

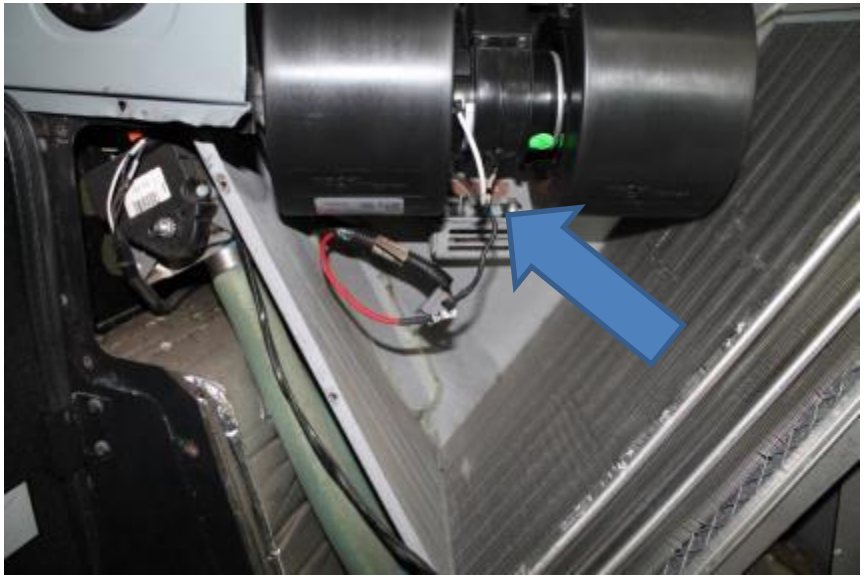

- Cut Red Wire from blower motor

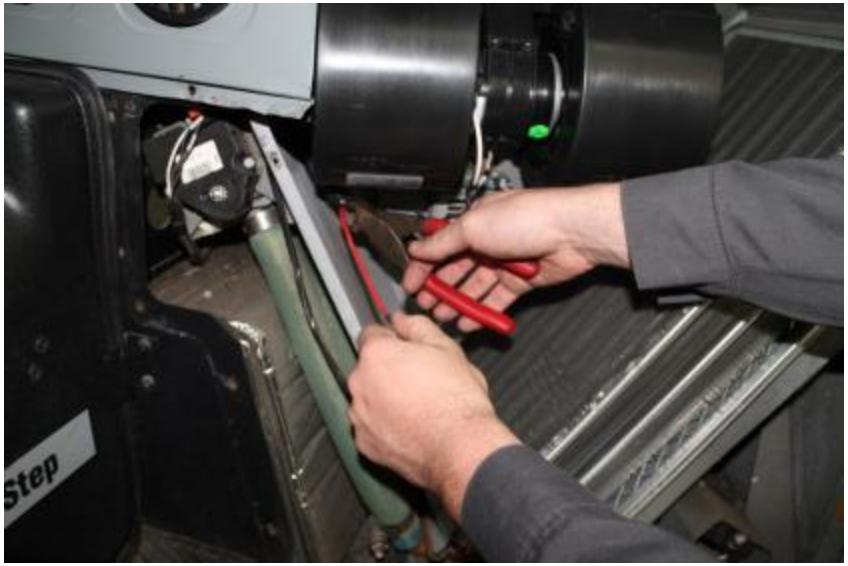

- Tape wire back into the harness with electrical tape

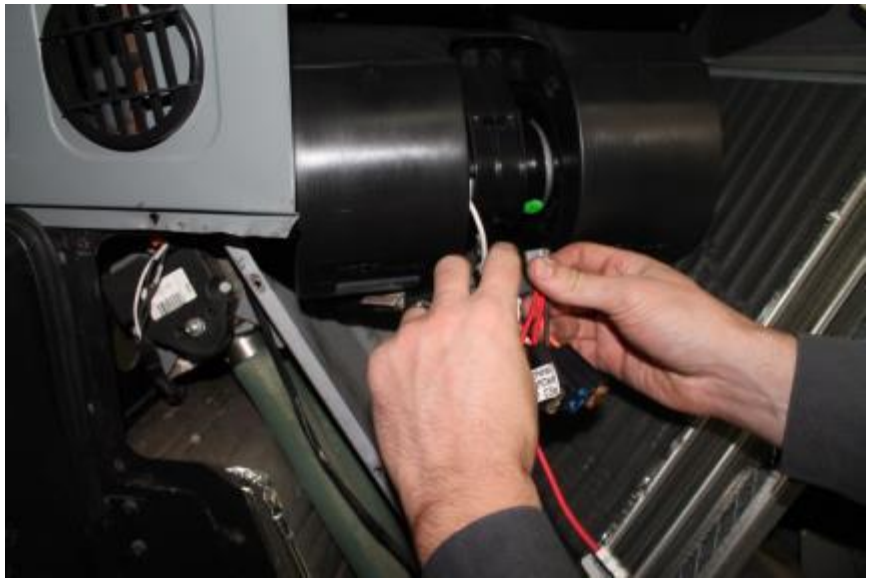

- Connect jumper harness to resistor block

Use Bergstrom part #1000785177 for the following part numbers.

Bergstrom P/N	Description	Bluebird P/N
1000102424	ASSEMBLY, HEATER RE	00015281
1000102444	ASSEMBLY, HEATER FE	00015279
1000102764	ASSEMBLY, HEATER RHD RE	00015280
1000102846	ASSEMBLY, HEATER RHD FE	00086985
782229	COMBO ASSY RE A3	00085146
782232	COMBO, ASSY A3 FE	3399005

Use Bergstrom part #1000686925 for the following part numbers.

Bergstrom P/N	Description	Bluebird P/N
B936232	HEATER PKG, BLUEBIRD TC 1997	1913763
B936237	HTR PKG, B-BIRD RH DR MI	1913771
B936253	HTR PKG, BLUEBIRD TC A3FE	0003017
B936257	HEATER PKG, BLUEBIRD TC 1999	00015281
B936258	HTR PKG, BLUEBIRD A3 TC 1999	00015279
B936259	HTR PKG, B-BIRD RH DR	00015280
782233	HTR ASSY, A3 FE RHD	00086985

- Connect jumper harness wiring harness

Bergstrom
Climate Control Systems

- Connect red wire from jumper harness to black wire
- Tape the connection using electrical tape

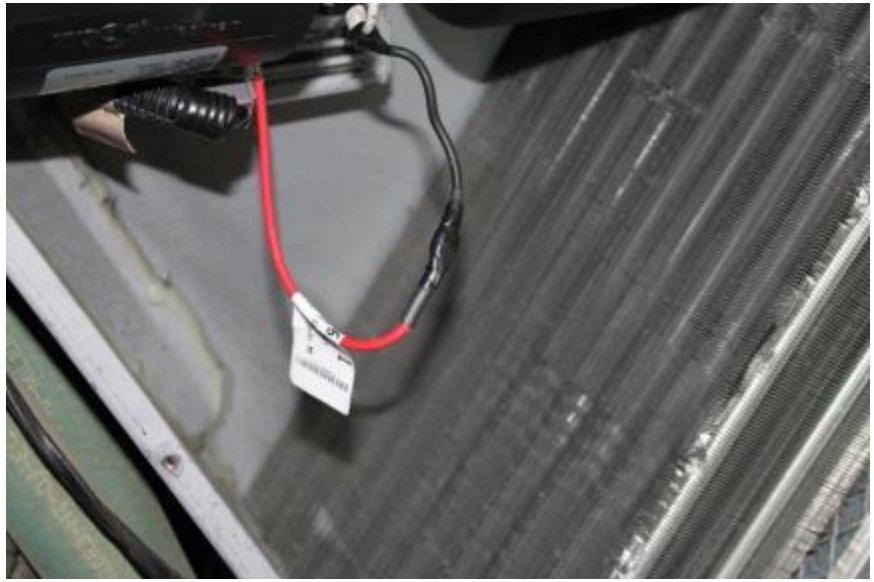

- Secure wires behind motor assembly

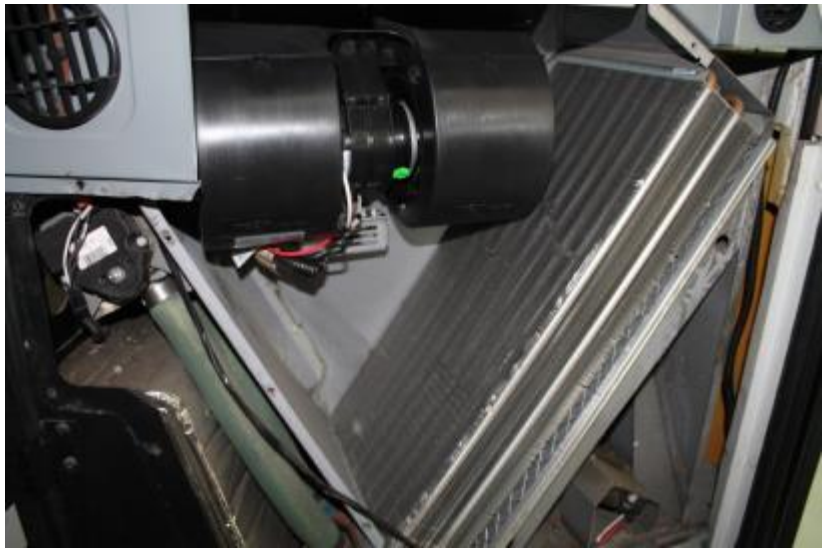

- Run heater for 3 minutes on each speed
- If any fuses open, replace the blower motor
- If motor performs on each speed, reassemble the heater parts

- Install heater panel

- Install screws for heater panel

- Install heater cover panel & install panel screws

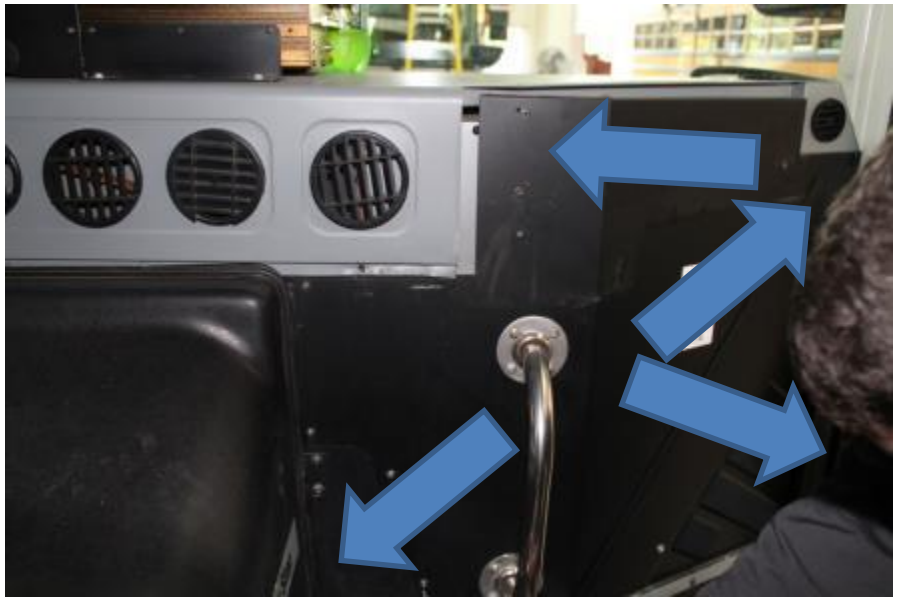

- Install trim around the heater unit

AGENDA

BLUE BIRD

December 17, 2014

To: Affected North American Dealers

Subject: Service Bulletin S14XT Heater Motor Circuit Update

Models Affected: 2000-2011 Model Year All American Model Buses
2004-2010 Model Year Vision Model Buses
2004-2008 Model Year Conventional Model Buses

Bulletin Duration: One (1) Year from Date of Issue

Overview

Buses equipped with body heater motors without thermal protection should have a jumper fuse harness installed to protect the heater motor circuit should the motor's internal windings overheat and fail. Service Bulletin S14XT provides instructions for installing a jumper harness which provides inline fuses for the body heater motor circuit. Separate instructions are provided for the All American front heater defroster, Vision stepwell heater, underseat heaters and rear wall heaters.

Affected Units

A separate printout will follow listing all buses in your territory that are affected by this service bulletin. Service Bulletin S14XT will be mailed to all owners on record. Be sure to review your list and advise of any incorrect owner names and/or addresses.

Time Allowance

Time allowed to install the jumper harness is determined by the number of heaters in each bus.

Labor times for All American model heater combinations are listed below:

1. Labor time to install jumper harness for front main heater/defroster only is 0.3hrs per bus.

2. Labor time to install jumper harness for main front heater/defroster and 1-2 body heaters (any combination of underseat & rear wall heaters) is 0.4 hours per bus

3. Labor time to install jumper harness for main front heater/defroster and 3-4 body heaters (any combination of underseat & rear wall heaters) is 0.6 hours per bus.

Labor times for Vision model buses are listed below:

1. Labor time to install jumper harness for 1-2 body heaters (any combination of underseat, rear wall heaters and stepwell heaters) is 0.3 hours per bus.

2. Labor time to install jumper harness for 3-4 body heaters (any combination of underseat, rear wall heaters and stepwell heaters) is 0.5 hours per bus.

Repair Parts
A nominal supply of the parts required to perform Service Bulletin S14XT will be shipped to each Dealer. Additional parts will need to be obtained through Blue Bird Engineering Services at 478-822-2242, as needed. Parts are available in limited quantities.

Labor Reimbursement
Warranty applications for labor reimbursement may be submitted to Blue Bird iWarranty (Campaigns/Claims).

Bulletin Duration
This Service Bulletin ends one (1) year from the date of issue.

Repair Facility
Owners are being advised to contact their dealer for assistance, if needed.

Questions
Questions regarding this bulletin should be directed to your Blue Bird Field Service Representative.

Sincerely,

Lisa Hancock
Engineering Services
(478) 822-2242